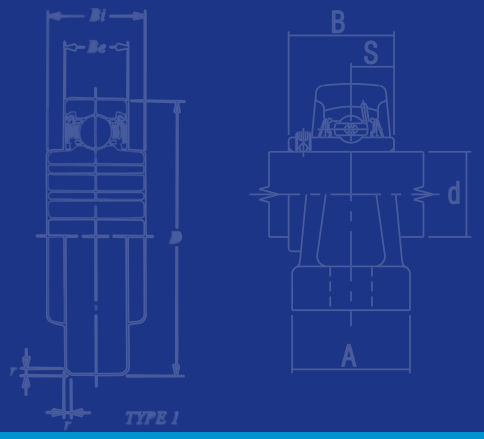

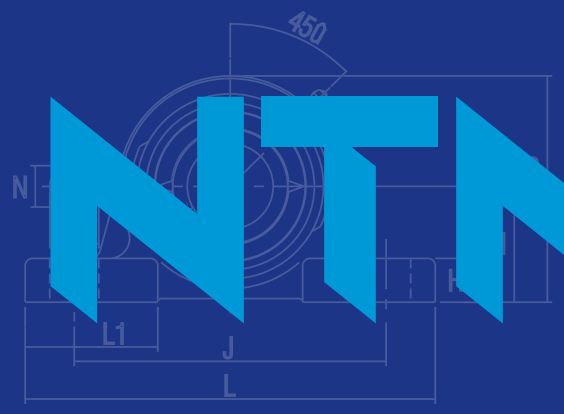

BALL AND ROLLER BEARINGS

CATALOG A-1000-XI

www.precise-rotation.ru

BALL AND ROLLER BEARINGS

CATALOG A-1000-XI

© 2009
Equal Opportunity Employer
Printed in USA 12/2009

www.precise-rotation.ru

NTN Terms and Conditions of Sale

Offer; Acceptance. These terms and conditions (these "Terms") are deemed part of all quotations, acknowledgments, invoices, purchase orders and other documents relating to the sale of goods and services (the "Goods") by Seller. If these Terms differ in any way from any purchase order, release or other document from Buyer, these Terms shall be construed as a counteroffer and will not be effective as an acceptance of any other term except on the express condition that Buyer assents to these Terms; provided that Buyer is deemed to have accepted these Terms upon the earlier of 10 days after receipt without objection and acceptance by Buyer of any Goods.

Warranties. (a) Exclusive Warranty. The exclusive Seller warranty is that the Goods are free from defects in materials and workmanship. This warranty is extended solely to Buyer and not to any successive buyers, users or other third parties. SELLER MAKES NO WARRANTY OR REPRESENTATION, EXPRESS OR IMPLIED, ABOUT THE MERCHANTABILITY OR FITNESS FOR A PARTICULAR PURPOSE OF THE GOODS. BUYER ACKNOWLEDGES THAT IT ALONE HAS DETERMINED THAT THE GOODS WILL SUITABLY MEET THE REQUIREMENTS OF THEIR INTENDED USE. SELLER DISCLAIMS ALL OTHER EXPRESS WARRANTIES. (b) Buyer Remedy. The exclusive remedy of Buyer as to any Good is that Seller shall repair or replace (at Seller's option) the Good (with Buyer responsible for labor charges for removal or replacement thereof), such obligation being subject to the following: (i) the Good's application was approved by Seller; (ii) Buyer delivers the Good to Seller with transportation charges prepaid; and (iii) analysis by Seller verifies that the Good was properly handled, installed, maintained, lubricated and not subject to abuse, misuse or inappropriate modification. (c) Damage Limits; Etc. SELLER SHALL NOT BE LIABLE FOR SPECIAL, INDIRECT OR CONSEQUENTIAL DAMAGES, LOSS OF PROFITS OR COMMERCIAL LOSS IN ANY WAY CONNECTED WITH THE GOODS, WHETHER SUCH CLAIM IS BASED IN CONTRACT, WARRANTY, NEGLIGENCE OR STRICT LIABILITY. Further, in no event shall liability of Seller for any act exceed the price of the Good on which liability is asserted. Buyer must commence any action within one year after the sale of such Good by Seller.

Delivery; Packaging. (a) Dates. Delivery and shipment dates are estimated dates only. (b) Partial Shipment; Etc. Each partial shipment is deemed a separate contract for the delivered Goods. (c) Shipment Terms. All shipments are freight collect - FOB shipping point and Seller reserves the right to select transportation methods and routing. (d) Packaging. Seller will package Goods as it deems proper for protection against normal handling and extra charges apply to special conditions. (e) Risk of Loss. Risk of loss will pass to Buyer upon tender by Seller at the point of shipment defined as Seller's dock.

Pricing; Payment; Etc. (a) Pricing. Prices are subject to change without notice, and prices in effect on the shipping date will govern. Any increases in freight rates or transportation charges before shipment will be for Buyer's account. Prices also are subject to increase for any taxes, duties (including dumping duties) or other charges imposed on Seller by any governmental authority for the sale, delivery or use of the Goods. (b) Payment. Terms of payment are net 30 days from the invoice date. If Buyer fails to make any payment when due or Seller otherwise deems itself insecure, Seller reserves the right to change terms of payment and discontinue shipments. Buyer agrees to pay Seller's customary late and interest charges for any failed or late payments.

Inspection; Etc. Buyer promptly shall inspect all delivered Goods. If Buyer does not inspect any Goods within six days of delivery, Buyer is deemed to have waived its right to inspect and to accept the Goods. Buyer must report to Seller shortages or defective Goods within ten days of receipt. Buyer may not return Goods without Seller's written consent, and Buyer's acceptance shall be final and irrevocable.

Cancellation; Etc. Orders approved and accepted by Seller shall constitute firm commitments of Buyer and are not subject to cancellation or rescheduling. Orders for non-standard Goods not listed in Seller's catalogs may not be canceled at all, nor will Seller accept return of such Goods for credit.

Indemnities. Buyer shall indemnify and hold harmless Seller, its employees and representatives from and against all liabilities, claims, actions, costs, expenses and disbursements (including attorney's fees and disbursements) related to any investigation, litigation or other proceeding (whether or not Seller is a party thereto) which arises or is alleged to arise from Buyer's acts or omissions under these Terms. Without limiting the foregoing, Buyer shall indemnify and hold harmless Seller and defend or settle any action brought against Seller to the extent that it is based on a claim that any Good made to Buyer specifications infringed intellectual property rights of another party.

Confidentiality; Inventions. (a) Confidentiality. All information and materials supplied by Seller to Buyer relating to the Goods are confidential and proprietary, and Buyer shall limit distribution thereof to its trusted employees and use its best efforts to preserve the confidentiality thereof. (b) Inventions; Etc. If Seller or any of its affiliates makes a discovery or invention pertaining to any research, development or design work contemplated hereby, such discovery or invention shall be the sole property of Seller and licensing shall be at the discretion of Seller.

Force Majeure. Seller shall not be liable for any delay or failure in delivery resulting from causes beyond its control, including earthquakes, fires, floods, strikes or other labor disputes, shortage of labor or materials, accidents to machinery, acts of sabotage, riots, delay in or lack of transportation or the requirements of any government authority.

Miscellaneous. (a) Waiver. No failure or delay by Seller in exercising any right and no course of dealing between Buyer and Seller shall operate as a waiver of rights by Seller. (b) Assignment. Buyer may not assign its rights hereunder without the Seller's written consent. (c) Law. This Agreement is governed by Illinois law (without regard to conflict of law principles). (d) Amendment. This Agreement constitutes the entire agreement between Buyer and Seller relating to the Goods, and no provision may be changed or waived unless in a writing signed by the parties. (e) Severability. If any provision hereof is rendered ineffective or invalid, such provision shall not invalidate any other provision. (f) Setoff. All claims hereunder by Seller are subject to setoff by Seller for any counterclaim arising out of any transaction with Buyer. (g) Tooling; Etc. All materials, equipment, facilities and special tooling Seller uses to manufacture Goods shall remain the property of Seller. (h) Definitions. "Including" means "including without limitation.

Although care has been taken to assure the accuracy of the data compiled in this catalog, NTN does not assume any liability to any company or person for errors or omissions.

Table of Contents

General Information	4–11
Micro Bearings	12–15
Radial Ball Bearings	16–41
Angular Contact Ball Bearings	43–56
Self Aligning Ball Bearings	57–61
Cylindrical Roller Bearings	62–74
Tapered Roller Bearings	75–105
Spherical Roller Bearings	106–119
Adapters, Locknuts and Lockwashers	120–126
Ball and Roller Thrust Bearings	127–132
Mounted Units	133–237
Ultra Class – Mounted Units	135–155
Pillow Blocks – Standard Line	156–173
Flanged Units – Standard Line	174–203
Ball Bearing Inserts	204–221
Disc Harrow and Hex Bore Bearings	222–224
Heavy Duty Mounted Units	225–237
Technical Information	239–252
Tolerance and Clearance Tables	253–269
Interchange Data	270–275
Conversion & Decimal Equivalents Tables	276–277
General Index	278–279

IN NORTH AMERICA

NTN is one of the three largest bearing companies in the world. With facilities at the hub of industrial centers around the globe, NTN Bearing Corporation is in an enviable position to best serve its customers, both domestic and worldwide.

In North America, as in all our manufacturing facilities, we attain maximum efficiency using our automated production equipment and processes to produce quality high-volume standard bearing sizes. Low-volume bearings and sizes are manufactured in a single facility and then exported worldwide according to customer requirements. All bearing types and sizes currently used in North America are in inventory at warehouses across the continent.

To best serve our customers, NTN devotes all resources to a single objective: production of the finest quality ball and roller bearings. All of our plants use advanced processing and high speed automated production equipment, engineered and built by NTN, to support our capacity for ultra-high quality bearings. NTN's Statistical Process Control programs ensure that during the production run, every bearing produced meets or exceeds AFBMA and ISO standards. Electromechanical quality inspection is present at every phase of manufacturing.

Proof of NTN's success at meeting our objective are the many quality awards received from our customers. Another cherished award was received in 1954 when NTN became the first bearing manufacturer to win the Deming Prize. This prestigious award is given for outstanding performance above all mechanical industries in statistical quality control, and efficiency of machinery and management. NTN's rigid quality standards originated with the company in 1918, and is the basis for every product innovation and corporate decision made today.

NTN's highly trained employees are here to serve your engineering, sales, and manufacturing needs. Customers receive unparalleled attention through technical assistance from over 700 engineers in North America, Europe and the Far East — all linked through 24-hour global communications. This

provides you with access to support from research and development engineers, application experts and field engineers. Our extensive testing and development laboratories keep us at the leading edge of bearing technology.

NTN became a world leader through attention to our customers' needs and constant technological innovations. Value-added bearings are NTN's forte. Our quality level allows purchasers to take them directly from receiving dock to application, eliminating incoming inspection costs. They add value to your end product with longer lifetime, less downtime and less maintenance.

HISTORY

1918 Began research and manufacture of ball bearings at Nishizono Ironworks (Uchibori, Kuwana-cho, Kuwanagun, Mie Pref.)

1923 Nishizono Ironworks and Tomoe Trading Co. (Nishi-ku, Osaka) inaugurated joint manufacture and sale of bearings under the brand name NTN.

1927 NTN Mfg. Co., Ltd. established with capital of ~50, 000.

1937 Renamed the Toyo Bearing Mfg. Co., Ltd.

1938 Established Showa Bearing Mfg. Co., Ltd. (Muko-gun, Hyogo Pref.)

1939 Kuwana Plant constructed.

Showa Bearing Mfg. Co., Ltd. merged to become Muko-gawa Plant.

1950 Established NTN Sales Co., Ltd.

1954 Awarded Deming Prize for statistical quality control for the first time in the machinery industry.

1960 Established Toyo Bearing Iwata Co., Ltd.

Established NTN Walzlager (Europa).

1962 Constructed needle bearing factory in Toyo Bearing Iwata Co., Ltd.

Changed name of Muko-gawa Plant to Takarazuka Plant.

Established Toyo Bearing Machine Tool Laboratory Co., Ltd.

1963 Established NTN Bearing Corp. of America, New York.

Skokie, IL, office and warehouse opened.

1964 Established NTN France S.A.

Established NTN Bearings (UK) Ltd.

1966 Established NTN Powdered Metal Co., Ltd.

1967 Executed Technical Assistance Agreement with Tung Yang Bearing Mfg. Co., Ltd. (Taiwan)

NBCA Lincolnwood, IL, Head Office and warehouse established.

1968 Established NTN Bearing Corp. of Canada Ltd.

1970 NBCA California sales office opened.

1971 Established American NTN Bearing Mfg. Corp. (Schiller Park, IL)

Established NTN Trading-Hong Kong Ltd.

Established Toyo Bearing Okayama Co.,Ltd.

Established NTN Kugellagerfabrik. (Deutschland)

NBCA Atlanta sales office opened.

1972 Renamed as NTN Toyo Bearing Co., Ltd.

Established NTN Product Development Institute.

NBCA Irvine, CA, office and warehouse occupied.

NBCA Headquarters building occupied. (Des Plaines, IL)

1973 Established NTN Bearing Mfg. (Canada) Ltd. (Merged into NTN Bearing Corp. of Canada Ltd. in 1980.)

Constructed constant-velocity joint factory in Toyo Bearing Iwata Co., Ltd.

1975 Established NTN Elgin Corp. (U.S.A.). (Merged into American NTN Bearing Mfg. Corp. in 1985.)

New Takarazuka Plant completed.

NBCA Michigan sales office opened.

1976 NBCA Dallas sales office opened.

1977 NBCA Totowa, NJ, office and warehouse occupied.

1980 NBCA Automitve Sales/Engineering Office established, Southfield, MI.

NBCA Distribution office and warehouse established, Mt. Prospect, IL.

1981 Research Departments reorganized into General Engineering Laboratory.

1982 Constructed constant-velocity joint factory in Toyo Bearing Okayama Co. Ltd.

Constant Velocity joint technology licensed to Hyundai Motors (South Korea).

NBCA Norcross, GA, office and warehouse occupied.

1983 Constant velocity joint technology licensed to Lepco Co, Ltd. (Australia)

Merged with Toyo Bearing Iwata Co., Ltd. and Toyo Bearing Okayama Co., Ltd.

Constant velocity joint technology licensed to Taiway Ltd. (Taiwan)

NBCA Irving, TX, office and warehouse occupied.

NBCA Headquarters building expanded. (Des Plaines, IL)

NBCA Midwest and Central sales offices established. (Des Plaines, IL)

NBCA Peopria, IL, sales office opened.

1984 Ground broken for Elgin, IL, tapered roller bearing manufacturing facility.

1985 Established Toyo Bearing Nagano Co. Ltd.

Bearing production technology licensed to National Engineering Industries Ltd. (India)

Established NTN-Bower Corporation, a joint venture with Federal-Mogul Corporation. (U.S.A.)

1986 Constructed (in Kuwana Plant) Japan's first plant dedicated to aerospace bearings.

1987 NTN-Bower Corporation became 100% owned affiliate.

1988 Established NTN Technical Center (U.S.A.) Inc. (Ann Arbor, MI)

Established Unidrive Pty. Ltd., a joint venture manufacturer of constant velocity joints in Australia.

Ground broken for Elgin, IL, bearing hub unit manufacturing facility.

1989 Built new building for R&D at Iwata Plant.

Merged with Toyo Bearing Nagano Co.

Established NTN Driveshaft Inc. (Columbus, IN — CVJ facility)

Renamed parent company NTN Corporation.

Bearing hub unit production began at Elgin, IL, facility.

1990 Built new building for R&D at Kuwana Plant.

NTN USA Corporation founded as headquarters in the U.S.A.

1991 NBCA and NTN USA Corp. occupied new Head Office in Mt. Prospect, IL.

NBCA Eastern Region occupied new offices, training center and warehouse in Exton, PA.

1994 Obtained ISO9002 certification (Kuwana Plant).

Established a distribution center in Singapore.

1996 Bought the ball bearing division of American firm Federal-Mogul Corporation (U.S.A.), NTN-BCA established.

Achieved 200-million target for domestic production of constant velocity joints

1997 Nagano Plant and 4 engineering departments obtained ISO9001/QS-9000 certification for their quality systems

Established NTN do Brazil Ltda.

1998 Established NTN Manufacturing (Thailand) Co., Ltd.

Iwata area NTN enterprises obtained ISO14001 certification

Established NTN Transmission Europe for CVJ production through a joint corporation with Renault of France.

1999 All plants and R&D Centers in Japan obtained ISO14001 certification by a multi-site qualification procedure

2000 NTN Group completed full certification for the ISO9000 series

2002 In a joint venture, established SHANGHAI NTN CORPORATION in China for the manufacture of CVJ cassetles and other products. In a joint venture with Nidec Corporation of Japan, established NTN-NIDEC (ZHEJIANG) CORPORATION for the manufacture of FDB units in China.

In a joint venture with Taiwan Yulong Group Corporation, established GUANGZHOU NTN-YULON DRIVETRAIN CO., LTD. for the manufacture of C.V. Joint Units in Guang Zhou, China.

2003 In the U.S.A. established NTK Precision Axle Corporation and Asahi Forge of America Corporation, joint ventures for production of constant velocity joint components. In China established Beijing NTN-Seohan Driveshaft Co., Ltd., a joint venture with Korea Flange Co., Ltd. for constant velocity joint production

www.precise-rotation.ru

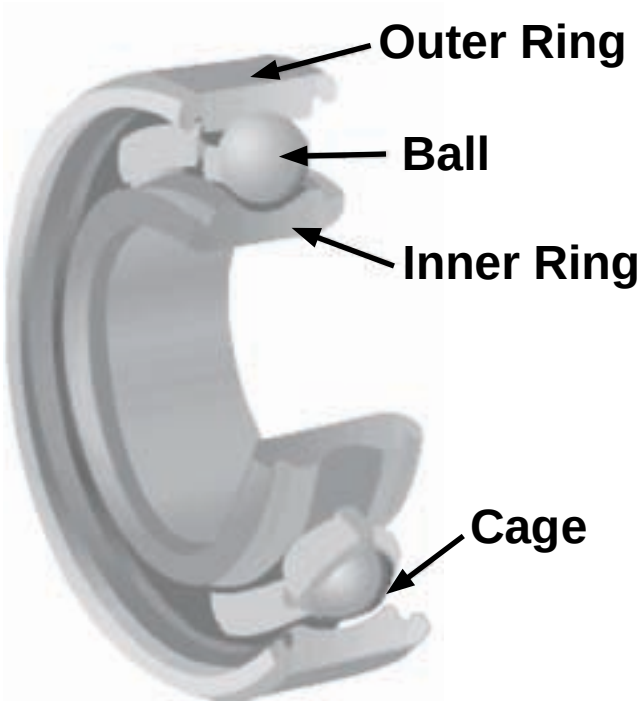

CLASSIFICATION OF ANTI-FRICTION BEARINGS

Most rolling bearings consist of bearing rings (an inner ring and an outer ring), rolling elements and a rolling element retainer (cage). The retainer separates the rolling elements at regular intervals, holds them in place within the inner and outer raceways, and allows them to rotate freely.

Rolling bearings fall into two main classifications: ball bearings and roller bearings. Balls geometrically contact the raceway surfaces of the inner and outer rings at “points,” while the contact surface of rollers is a “line” contact. Rollers come in four basic geometric styles: cylindrical, needle, tapered and spherical. Rolling bearings can further be classified according to the direction in which the load is applied: radial, thrust, or a combination of both.

While the rolling elements and the bearing rings take any load applied to the bearings (at the contact point between the rolling elements and raceway surfaces), the retainer takes no direct load. It only serves to hold the rolling elements at equal distances from each other, forcing the rolling elements to enter the load zones and prevent them from falling out.

- Rolling bearings
  - Ball bearings
    - Radial ball bearings
      - Single row deep groove ball bearings
      - Maximum capacity type ball bearings
      - Single row angular contact ball bearings
      - Duplex angular contact ball bearings
      - Double row angular contact ball bearings
      - Four-point contact ball bearings
      - Self-aligning ball bearings
    - Thrust ball bearings
      - Single direction thrust ball bearings with flat back face
      - Single direction thrust ball bearings with seating ring
      - Double direction thrust ball bearings with flat back face
      - Double direction thrust ball bearings with seating rings
      - Double direction angular contact thrust ball bearings
  - Roller bearings
    - Radial roller bearings
      - Single row cylindrical roller bearings
      - Double row cylindrical roller bearings
      - Needle roller bearings
      - Single row tapered roller bearings
      - Double row tapered roller bearings
      - Spherical roller bearings
    - Thrust roller bearings
      - Cylindrical roller thrust bearings
      - Needle roller thrust bearings
      - Tapered roller thrust bearings
      - Spherical roller thrust bearings

DESIGN AND CHARACTERISTICS OF BALL AND ROLLER BEARINGS

SINGLE ROW RADIAL BALL BEARINGS are the most widely used bearings and utilize an uninterrupted raceway, which makes these bearings suitable for radial loads, or a combination of thrust and radial loads. This design permits precision tolerances even at high speed operation.

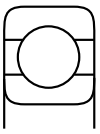

The cage in this bearing is pressed steel. For high speed bearings, machined brass cages are available. Bearings with locating snap rings are also available.

PRELUBRICATED BEARINGS have integral seals, or shields, which are packed with long-life grease. In many applications, these bearings may be used without supplementary seals, closures, or protective devices. This design offers the lowest possible manufacturing cost to the consumer.

The boundary dimension of this type is the same as the corresponding bearings without the seals or shields.

SHIELDED BALL BEARINGS are protected on one, or both sides (suffixes Z and ZZ, respectively) by metal shields fastened to the outer ring. This close clearance labyrinth seal retains the lubricant and prevents the entrance of foreign matter.

SEALED BALL BEARINGS incorporate steel reinforced rubber seals securely fastened to a groove on the outer ring. Contact with the inner ring is by sealing lip (Contact Suffix LLU). Or, non-contact with the inner ring is by labyrinth seal (Non-contact Suffix LLB) to provide positive sealing at all times.

SINGLE ROW ANGULAR CONTACT BALL BEARINGS feature raceways with high and low shoulders. These opposing raceways are designed to carry thrust load in one direction.

These bearings may be preloaded at the factory so that the correct preload will develop within the bearing.

The bearings in this series are assembled with a specific internal clearance so that they will have a specified contact angle under load. The standard contact load used by NTN is 30°; bearings made to a 40° contact angle carry the suffix B.

For high speed grinding spindles, the 7000C, 7200C and the 7300C series are available. They are high accuracy bearings with a 15° contact angle, and phenolic resin cages for high speed operations.

DOUBLE ROW ANGULAR CONTACT BALL BEARINGS have an inner and outer ring with a double raceway. The two rows are so related that the contact angle is similar to a pair of back-to-back single row bearings. The 5200 and 5300 series offer continuous races and can carry thrust loads in either direction. Since the 3200 and 3300 series have filling slots, it is necessary to mount them with the thrust load acting against the unnotched face of the rings.

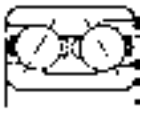

DOUBLE ROW SELF-ALIGNING BEARINGS utilize an inner ring with two rows of balls in two deep raceways, and an outer ring with a single spherical raceway. In this way, the inner and outer rings can be misaligned relative to each other. The resulting effect is a comparatively large angle imposing moment loads upon the balls.

The boundary dimensions of the 1200 and 1300 series are the same as the 6200 and 6300 single row deep groove bearings.

CYLINDRICAL ROLLER BEARINGS have rollers which are essentially cylindrical in shape. This provides a modified line contact with the cylindrical inner and outer ring raceways, while the rollers are guided by ground ribs on either the inner or outer ring.

The cylindrical shape allows the inner ring to have axial movement relative to the outer ring (except the NH type). This is especially important when accommodating thermal expansion when both rings must be press fitted.

In this series, the NJ, NF and NH types can carry light or intermittent thrust loads.

The NN3000 and NN3000K series are available in high precision tolerances and are well suited for use in machine tool spindles.

TAPERED ROLLER BEARINGS utilize conical rollers and raceways arranged so that the rollers and raceways meet at a common apex. The rollers are guided by contact between the large end of the roller and a rib on the inner ring. This provides high capacity for radial and single thrust loads.

SPHERICAL ROLLER BEARINGS have two rows of rollers in separate raceways which allows the bearing to compensate for angular thrust errors. They have large radial and thrust load capacity for heavy shock and impact loads, making them suitable for heavy industrial equipment.

DUPLEX BEARINGS use a set of two on a common shaft with the inner and outer rings clamped solidly together. They are used to gain axial shaft control, rigidity and extra capacity.

There are three fundamental combinations in duplex bearings: face-to-face (DF), back-to-back (DB), and tandem (DT).

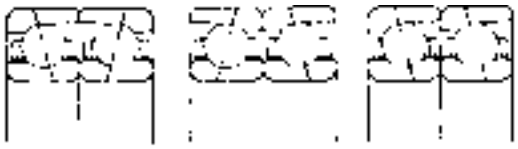

DF DB DT

SINGLE DIRECTION THRUST BEARINGS consist of two washers having ball grooves ground into their adjacent faces with balls and cages mounted between these grooves. They are normally equipped with either pressed or machined cages and are suitable for carrying thrust loads at moderate speeds.

DOUBLE DIRECTION ANGULAR CONTACT THRUST BALL BEARINGS are back-to-back duplex bearings with a larger contact angle than that of normal angular contact ball bearings.

These bearings are primarily designed as thrust bearings for machine tools. They utilize machined brass cages.

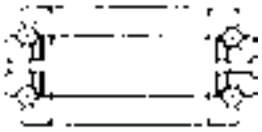

SPHERICAL ROLLER THRUST BEARINGS are similar to double row spherical roller bearings, but have a greater contact angle. They are guided by ground flanges on the inner ring and operate against the spherical raceway in the outer ring. The contact angle is approximately 45°. Machined cages are normally used, and oil lubrication is recommended.

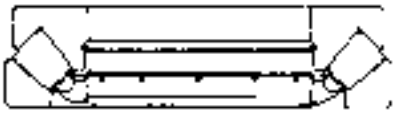

BEARING UNITS consist of a ball or roller bearing installed within a housing. The housings are most commonly made of cast iron but may also be made of other metals or nonmetallic materials. The housing provides rigidity and secure positioning for the bearing within the application. It also simplifies the task of replacing the bearing as the housing and bearing can be replaced as a complete unit.

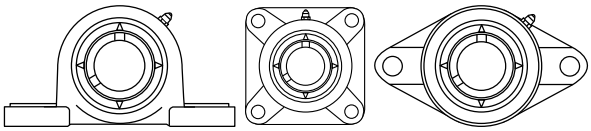

NTN

MICRO BEARING NUMBERING SYSTEM

Open Type	Single Shield Type	Double Shield Type	Flanged Outer Ring: Open Type	Flanged Outer Ring: Single Shield Type	Flanged Outer Ring: Double Shield Type
	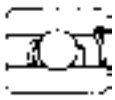				
67 68 69 60 62 63 R(A)	W(A)67ZA W68Z(A) (W)69Z(A) (W)60Z(A) 62Z 63Z R(A)-Z(A)	W(A)67ZZA W68ZZ(A) (W)69ZZ(A) (W)60ZZ(A) 62ZZ 63ZZ R(A)-ZZ(A)	FL67 FL68 FL69 FL60 FL62 FL63 FLR(A)	FL(A)W(A)67ZA FLW68Z(A) FL(W)69Z(A) FL(W)60Z(A) FL62Z FL63Z FLR(A)-Z(A)	FL(A)W(A)67ZZA FLW68ZZ(A) FL(W)69ZZ(A) FL(W)60ZZ(A) FL62ZZ FL63ZZ FLR(A)-ZZ(A)
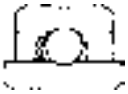	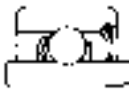		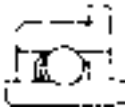	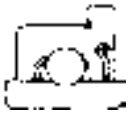	
RW	R(A)W-ZA	R(A)W-ZZA	FLRW	FLR(A)W-ZA	FLR(A)W-ZZA

Series

F - FL 6 8 5 T2 ZZA CNS P5 / 1K

Prefix — **Basic Number** — **Cage** — **Seal or Shield** — **Clearance** — **Tolerance** — **Prelubricant**

1. PREFIX
   - No Symbol: High carbon chrome bearing steel (equivalent to AISI E52100)
   - F: Martensitic stainless steel (equivalent to AISI 440C)

2. SERIES
   - 67, 68: Metric series
   - 69, 60: Metric series
   - 62, 63: Metric series
   - R: Inch series
   - W: Wider than standard width (sealed type)
   - WA: Non-standard sizes
   - RA: Wider than standard width of inch series (open and sealed types)
   - FL: Flanged outer ring
   - FLA: Flanged outer ring, provided non-standard flange dimensions

3. CAGE
   - No Symbol: Pressed steel cage
   - J1: Pressed stainless steel cage
   - T1: Phenolic resin cage
   - T2: Nylon cage

4. SEAL OR SHIELD
   - No symbol: Open Type
   - Z, ZZ: Steel shield(s)
   - ZA, ZZA: Removable steel shield(s)
   - ZA1, ZZA1: Removable stainless steel shield(s)
   - Z1, ZZ1: Stainless steel shield(s)
   - LB, LLB: Non-contact type rubber seal(s)
   - LU, LLU: Contact type rubber seal(s)

5. INTERNAL CLEARANCE
   - No Symbol: Normal clearance
   - C2: Clearance less than normal
   - C3: Clearance greater than normal
   - C4: Clearance greater than C3
   - C2S: Low group of C2 clearance
   - CNS: Low group of normal clearance
   - CNM: Medium group of normal clearance
   - CNL: High group of normal clearance
   - C3S: Low group of C3 clearance
   - C3M: Medium group of C3 clearance
   - C3L: High group of C3

6. TOLERANCE
   - No Symbol: ISO class 0 (equivalent to ABEC 1)
   - P6: ISO class 6 (equivalent to ABEC 3)
   - P5: ISO class 5 (equivalent to ABEC 5)
   - P4: ISO class 4 (equivalent to ABEC 7)
   - P2: ISO class 2 (equivalent to ABEC 9)
   - P5A: ISO class 5A
   - P4A: ISO class 4A
   - PS5: NTN PS class 5
   - PS4: NTN PS class 4
   - PX1: Special tolerance

7. PRELUBRICANT
   - 1K: Kyodo Yushi Multemp PS No. 2
   - 2AS: Shell Alvania 2
   - 1E: Exxon Andok C
   - 6K: Klüber Isoflex Super LDS18
   - 5C: Chevron SRI2
   - 5K: Kyodo Yushi Multemp SRL
   - 1W: Anderson Oil Winsor Lube L245X (oil)
   - L627: Exxon Polyrex EM

10. SPECIAL SPECIFICATION
   - V1...Vn

Units: **INCHES**

MICRO BEARING (INCH SERIES)

OPEN TYPE								DOUBLE SHIELD TYPE								
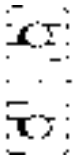					Flanged Outer Ring				Flanged Outer Ring							
Bearing No.	Boundary Dimensions				Bearing No. Flange Type	Boundary Dimensions		Bearing No.	Boundary Dimensions			Flange Width	Basic Load Ratings (lbs)		Limiting Speeds (RPM)	
	Bore	O.D.	Width	Min. Chamfer		Flange O.D.	Flange Width		Width	Bearing No. Flange Type w/Shields	OD		C Dynamic	Co Static	Grease	Oil
R01	**0.0400**	**0.1250**	**0.0469**	**0.003**	**—**	**—**	**—**	**—**	**—**	**—**	**—**	**—**	**22**	**6**	**110,000**	**130,000**
R0	**0.0469**	**0.1562**	**0.0625**	**0.003**	**FLR0**	**0.203**	**0.013**	**RA0ZZA**	**0.0937**	**FLRA0ZZA**	**0.203**	**0.031**	**36**	**10**	**93,000**	**110,000**
R1	**0.0550**	**0.1875**	**0.0781**	**0.003**	**FLR1**	**0.234**	**0.023**	**RA1ZZA**	**0.1094**	**FLRA1ZZA**	**0.234**	**0.031**	**42**	**13**	**81,000**	**95,000**
R1-4	**0.0781**	**0.2500**	**0.0937**	**0.003**	**FLR1-4**	**0.296**	**0.023**	**RA1-4ZZA**	**0.1406**	**FLRA1-4ZZA**	**0.296**	**0.031**	**63**	**20**	**67,000**	**79,000**
R133	**0.0937**	**0.1875**	**0.0625**	**0.003**	**FLR133**	**0.234**	**0.018**	**RA133ZZA**	**0.0937**	**FLRA133ZZA**	**0.234**	**0.031**	**28**	**9.5**	**73,000**	**85,000**
R1-5	**0.0937**	**0.3125**	**0.1094**	**0.005**	**FLR1-5**	**0.359**	**0.023**	**RA1-5ZZA**	**0.1406**	**FLRA1-5ZZA**	**0.359**	**0.031**	**96**	**34**	**56,000**	**66,000**
R144	**0.1250**	**0.2500**	**0.0937**	**0.003**	**FLR144**	**0.296**	**0.023**	**RA144ZZA**	**0.1094**	**FLRA144ZZA**	**0.296**	**0.031**	**64**	**22**	**59,000**	**70,000**
R2-5	**0.1250**	**0.3125**	**0.1094**	**0.003**	**FLR2-5**	**0.359**	**0.023**	**RA2-5ZZA**	**0.1406**	**FLRA2-5ZZA**	**0.359**	**0.031**	**126**	**40**	**54,000**	**63,000**
R2-6	**0.1250**	**0.3750**	**0.1094**	**0.005**	**—**	**—**	**—**	**RA2-6ZZA**	**0.1406**	**—**	**—**	**—**	**144**	**50**	**49,000**	**58,000**
R2	**0.1250**	**0.3750**	**0.1562**	**0.012**	**FLR2**	**0.440**	**0.030**	**R2ZZA**	**0.1562**	**FLR2ZZA**	**0.440**	**0.030**	**144**	**50**	**49,000**	**58,000**
RA2	**0.1250**	**0.5000**	**0.1719**	**0.012**	**—**	**—**	**—**	**RA2ZZ**	**0.1719**	**—**	**—**	**—**	**258**	**89**	**43,000**	**51,000**
R155	**0.1562**	**0.3125**	**0.1094**	**0.003**	**FLR155**	**0.359**	**0.023**	**RA155ZZA**	**0.1250**	**FLRA155ZZA**	**0.359**	**0.036**	**76**	**30**	**51,000**	**60,000**
R156	**0.1875**	**0.3125**	**0.1094**	**0.003**	**FLR156**	**0.359**	**0.023**	**RA156ZZA**	**0.1250**	**FLRA156ZZA**	**0.359**	**0.036**	**89**	**32**	**49,000**	**58,000**
R166	**0.1875**	**0.3750**	**0.1250**	**0.003**	**FLR166**	**0.422**	**0.023**	**R166ZZA**	**0.1250**	**FLRA166ZZA**	**0.422**	**0.031**	**160**	**60**	**46,000**	**55,000**
R3	**0.1875**	**0.5000**	**0.1562**	**0.012**	**—**	**—**	**—**	**—**	**0.1875**	**—**	**—**	**—**	**295**	**110**	**41,000**	**48,000**
RA3	**0.1875**	**0.5000**	**0.1960**	**0.012**	**FLRA3**	**0.565**	**0.042**	**RA3ZZ**	**0.1960**	**FLRA3ZZ**	**0.565**	**0.042**	**295**	**110**	**41,000**	**48,000**
R168	**0.2500**	**0.3750**	**0.1250**	**0.003**	**FLR168**	**0.422**	**0.023**	**R168ZZA**	**0.1250**	**FLRA168ZZA**	**0.422**	**0.036**	**60**	**31**	**43,000**	**51,000**
R188	**0.2500**	**0.5000**	**0.1250**	**0.005**	**FLR188**	**0.547**	**0.023**	**RA188ZZA**	**0.1875**	**FLRA188ZZA**	**0.547**	**0.045**	**186**	**84**	**39,000**	**46,000**
R4	**0.2500**	**0.6250**	**0.1960**	**0.012**	**FLR4**	**0.690**	**0.042**	**R4ZZ**	**0.1960**	**FLR4ZZ**	**0.690**	**0.042**	**335**	**136**	**36,000**	**43,000**
R6	**0.3750**	**0.8750**	**0.2812**	**0.016**	**FLR6**	**0.989**	**0.062**	**R6ZZ**	**0.2812**	**FLR6ZZ**	**0.989**	**0.062**	**526**	**199**	**31,000**	**37,000**

Bearing numbers listed above are for bearings made of high carbon chrome bearing steel; bearings made of stainless steel (equivalent to AISI 440 C) are also available upon request, for which “F” should be prefixed to the bearing numbers.

Notes

OPEN TYPE		DOUBLE SHIELD TYPE	
	Flanged Outer Ring		Flanged Outer Ring

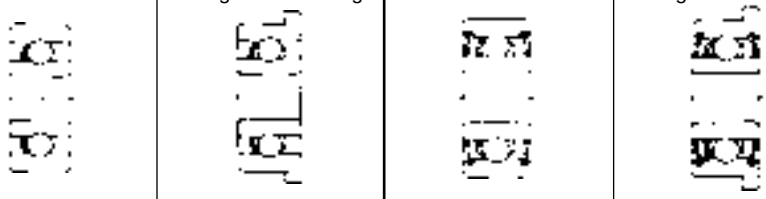

Units: Millimeters

NTN
MICRO SERIES
METRIC

MICRO BEARING (METRIC SERIES)

Bearing No.	Boundary Dimesions				Bearing No.	Flange Dimensions		Bearing No.		Bearing No.	Flange Dimensions		Limiting Speed (RPM)		Basic Load Ratings (lbs)	
	Bore	O.D.	Width	Min. Chamfer		O.D.	Width		Width		O.D.	Width	Grease	Oil	Dynamic C	Static C_0
68/1.5	1.5	4	1.2	0.15	FL68/1.5	5.0	0.4	W68/1.5ZZA	2.0	FLW68/1.5ZZA	5.0	0.60	88,000	100,000	23	6
69/1.5A	1.5	5	2.0	0.15	FL69/1.5	6.5	0.6	W69/1.5ZZA	2.6	FLW69/1.5ZZA	6.5	0.80	79,000	93,000	53	15
60/1.5	1.5	6	2.5	0.15	FL60/1.5	7.5	0.6	W60/1.5ZZA	3.0	FLW60/1.5ZZA	7.5	0.80	71,000	84,000	62	19
672	2.0	4	1.2	0.05	—	—	—	W672ZZA	2.0	—	—	—	83,000	98,000	23	8.5
682	2.0	5	1.5	0.08	FL682	6.1	0.5	W682ZZA	2.3	FLW682ZZA	6.1	0.60	74,000	87,000	38	11
692	2.0	6	2.3	0.15	FL692	7.5	0.6	W692ZZA	3.0	FLW692ZZA	7.5	0.80	67,000	79,000	63	20
602	2.0	7	2.8	0.15	FL602	8.5	0.7	W602ZZA	3.5	FLW602ZZA	8.5	0.90	62,000	73,000	86	28
67/2.5	2.5	5	1.5	0.08	—	—	—	W67/2.5ZZA	2.3	—	—	—	70,000	82,000	34	13
68/2.5	2.5	6	1.8	0.08	FL68/2.5	7.1	0.5	W68/2.5ZZA	2.6	FLW68/2.5ZZA	7.1	0.80	35,000	76,000	47	16
69/2.5	2.5	7	2.5	0.15	FL69/2.5	8.5	0.7	W69/2.5ZZA	3.5	FLW69/2.5ZZA	8.5	0.90	59,000	70,000	64	22
60/2.5	2.5	8	2.8	0.15	FL60/2.5	9.5	0.7	W60/2.5ZZA	4.0	FLW60/2.5ZZA	9.5	0.90	56,000	66,000	123	39
673	3.0	6	2.0	0.08	FL673	7.2	0.6	WA673ZZA	2.5	FLWA673ZZA	7.2	0.60	60,000	71,000	54	21
683	3.0	7	2.0	0.1	FL683	8.1	0.5	W683ZZA	3.0	FLW683ZZA	8.1	0.80	58,000	68,000	87	29
693	3.0	8	3.0	0.15	FL693	9.5	0.7	W693ZZA	4.0	FLW693ZZA	9.5	0.90	54,000	63,000	126	40
603	3.0	9	3.0	0.15	FL603	10.5	0.7	W603ZZA	5.0	FLW603ZZA	10.5	1.00	50,000	59,000	142	49
623	3.0	10	4.0	0.15	FL623	11.5	1.0	623ZZA	4.0	FL623ZZA	11.5	1.00	50,000	58,000	144	50
694	4.0	11	4.0	0.15	FL694	12.5	1.0	694ZZA	4.0	FL694ZZA	12.5	1.00	45,000	52,000	161	62
604	4.0	12	4.0	0.20	FL604	13.5	1.0	604ZZ	4.0	FL604ZZ	13.5	1.00	43,000	51,000	218	80
624	4.0	13	5.0	0.20	FL624	15.0	1.0	624ZZ	5.0	FL624ZZ	15.0	1.00	42,000	49,000	295	110
634	4.0	16	5.0	0.30	—	—	—	634ZZ	5.0	—	—	—	37,000	44,000	395	153
675	5.0	8	2.0	0.08	FL675	9.2	0.6	WA675ZZA	2.5	FLWA675ZZA	9.2	0.60	49,000	57,000	66	32
685	5.0	11	3.0	0.15	FL685	12.5	0.8	W685ZZA	5.0	FLW685ZZA	12.5	1.00	43,000	51,000	161	63
695	5.0	13	4.0	0.20	FL695	15.0	1.0	695ZZA	4.0	FL695ZZA	15.0	1.00	40,000	47,000	242	97
605	5.0	14	5.0	0.20	FL605	16.0	1.0	605ZZ	5.0	FL605ZZ	16.0	1.00	39,000	46,000	299	114
625	5.0	16	5.0	0.30	FL625	18.0	1.0	625ZZ	5.0	FL625ZZ	18.0	1.00	37,000	44,000	395	153
635	5.0	19	6.0	0.30	—	—	—	635ZZ	6.0	—	—	—	34,000	40,000	525	199
686	6.0	13	3.5	0.15	FL686	15.0	1.0	W686ZZA	5.0	FLW686ZZA	15.0	1.10	39,000	46,000	243	99
696	6.0	15	5.0	0.20	FL696	17.0	1.2	696ZZ	5.0	FL696ZZ	17.0	1.20	37,000	44,000	305	119
606	6.0	17	6.0	0.30	FL606	19.0	1.2	606ZZ	6.0	FL606ZZ	19.0	1.20	35,000	42,000	495	195
626	6.0	19	6.0	0.30	FL626	22.0	1.5	626ZZ	6.0	FL626ZZ	22.0	1.50	34,000	40,000	525	199
677	7.0	11	2.5	0.10	FL677	12.2	0.6	WA677ZZA	3.0	FLWA677ZZA	12.2	0.60	40,000	47,000	124	60
687	7.0	14	3.5	0.15	FL687	16.0	1.0	W687ZZA	5.0	FLW687ZZA	16.0	1.10	37,000	44,000	264	115
697	7.0	17	5.0	0.30	FL697	19.0	1.2	697ZZ	5.0	FL697ZZ	19.0	1.20	35,000	41,000	360	160
607	7.0	19	6.0	0.30	—	—	—	607ZZ	6.0	—	—	—	34,000	40,000	505	205
627	7.0	22	7.0	0.30	—	—	—	627ZZ	7.0	—	—	—	32,000	37,000	750	315
698	8.0	19	6.0	0.30	FL698	22.0	1.5	698ZZ	6.0	FL698ZZ	22.0	1.50	33,000	39,000	445	194
608	8.0	22	7.0	0.30	FL608	25.0	1.5	608ZZ	7.0	FL608ZZ	25.0	1.50	32,000	37,000	750	315
628	8.0	24	8.0	0.30	—	—	—	628ZZ	8.0	—	—	—	31,000	36,000	900	355
679	9.0	14	3.0	0.10	—	—	—	W679ZZA	4.5	—	—	—	36,000	42,000	207	105
689	9.0	17	4.0	0.20	FL689	19.0	1.0	W689ZZ	5.0	FLW689ZZ	19.0	1.10	33,000	39,000	390	184
699	9.0	20	6.0	0.30	—	—	—	699ZZ	6.0	—	—	—	32,000	38,000	560	245
609	9.0	24	7.0	0.30	—	—	—	609ZZ	7.0	—	—	—	31,000	36,000	765	325
629	9.0	26	8.0	0.60	—	—	—	629ZZ	8.0	—	—	—	30,000	35,000	1030	440

Bearing numbers listed above are for bearings made of high carbon chrome bearing steel; bearings made of stainless steel (equivalent to AISI 440 C) are also available upon request, for which “F” should be prefixed to the bearing numbers.

RADIAL BALL BEARING NUMBERING SYSTEM

SEAL STRUCTURE AND TYPE DESIGNATION	FEATURES
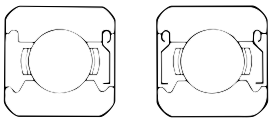 Z ZZ	The sealed V-slot around the inner ring creates an air and/or grease pocket which increases the labyrinth effect. This is a non-contact, low-friction torque type bearing assembly, which can be used effectively for general protection.
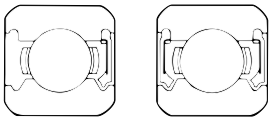 LB LLB	Both sides of the seal edge have a circular concaved surface which creates several narrow-wide gaps along the V-shaped groove of the inner ring's sealed surface. The unique design ensures a perfect labyrinth effect. This non-contact, low friction bearing assembly requires very little torque and is highly resistant to dust build-up.
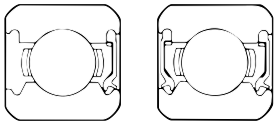 LU LLU	The seal edge forms a double-lip. The inner lip touches the V-slot side of the inner ring's seal surface. There is a slight gap between the inner ring and the outer lip which produces the labyrinth effect. Even if friction causes the inner lip to wear, the outer lip constricts around the inner ring to compensate, and thus constantly preserving the perfect sealing effect. Due to the fact that it is a contact type seal bearing, the torque will be a little greater but the seal will provide the optimum protection from dust penetration.

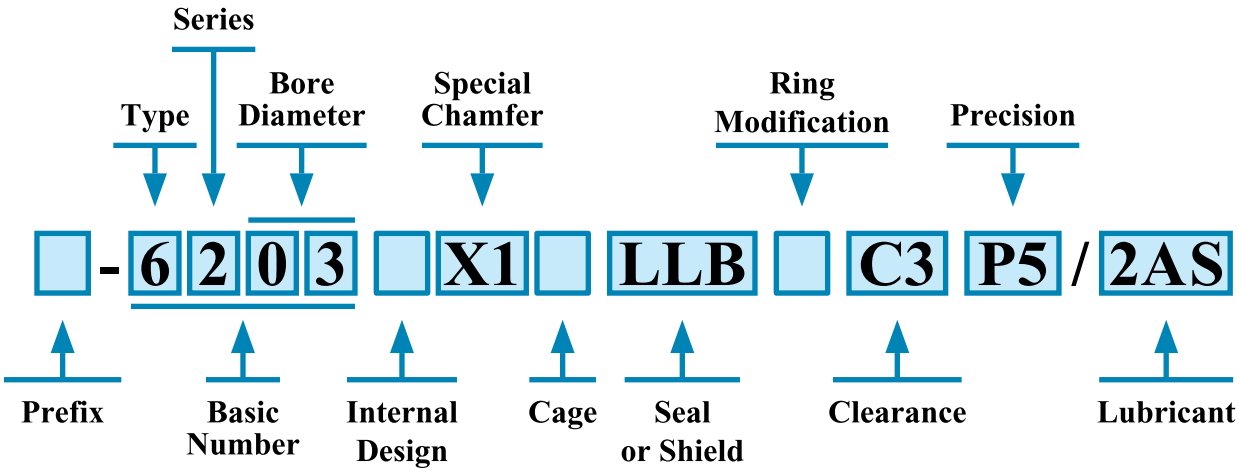

1. PREFIX

TS2:	Heat stabilization for up to 320˚ F (160˚ C)
TS3:	Heat stabilization for up to 390˚ F (200˚ C)
TS4:	Heat stabilization for up to 480˚ F (250˚ C)

2. TYPE

6:	Single row deep groove ball bearings
8, WC8:	Single row deep groove ball bearings
BL:	Maximum capacity
DE & DF:	Special double row ball bearings
SC & SX:	Special single row ball bearings
R:	Inch series
TMB:	Thermal mechanical bearing

3. INTERNAL DESIGN

A:	Internal redesign, from A onward
U:	Universal seal groove for open bearings

4. CHAMFER

Xn:	Special chamfer, from 1 onward (X1, X2 . . .)

5. CAGE

No Symbol:	Pressed steel cage
J:	Pressed steel cage
T1:	Phenolic cage
T2:	Nylon cage
L1:	Machined brass cage

6. SEAL OR SHIELD

No Symbol:	Open Type
LB, LLB:	Non-contact rubber seal
LU, LLU:	Double-lip contact rubber seal
LH,LLH:	Light contact rubber seal
LUA,LLUA:	Polyacrylic rubber seal
LUA1,LLUA1:	Fluorocarbon rubber seal
Z, ZZ:	Shield
Z1, ZZ1:	Stainless steel shield
ZA, ZZA:	Removable shield

7. RING MODIFICATION

N:	Snap ring groove on outer ring, but without snap ring
NR:	Snap ring groove on outer ring, snap ring included
/X.XX:	Special bore, XX.XX in mm; Ex. 5/16" bore, /7.938
/XX.X:	Special O.D., size XX.X in mm

8. INTERNAL CLEARANCE

C1:	Radial clearance less than C2
C2:	Radial clearance less than normal
C3:	Radial clearance greater than normal
C4:	Radial clearance greater than C3
C5:	Radial clearance greater than C4
CSXX:	Special radial clearance; XX is mean value in 0.001 mm units

9. TOLERANCE

P6:	ISO class 6 (equivalent to ABEC 3)
P5:	ISO class 5 (equivalent to ABEC 5)
P4:	ISO class 4 (equivalent to ABEC 7)
PXn:	Special tolerance, from 1 onward (PX1, PX2 . . .)
Vn:	Special requirement, from 1 onward (V1, V2 . . .)

10. PRELUBRICANT (Typical)

1E:	Exxon Andok C grease
1W:	Anderson Oil Winsor Lube L-245X, MIL-L-6085A
2AS:	Shell Alvania #2 grease, MIL-G-18709A
2E:	Exxon Unirex N3
3AS:	Shell Oil Alvania #3 grease
5C:	Chevron SRI #2 grease, MIL-G-3545C
5K:	Kyodo Yushi Multemp SRL
5S:	Shell Aeroshell #7 grease, MIL-G-23827A
9B:	Mobil 28, MIL-G-81322
L627:	Exxon Polyrex EM

SINGLE ROW RADIAL BALL BEARINGS

Units: **INCHES**

NTN
SERIES R

Bearing No.	Bore d	O.D. D	Width B	Fillet Radius (min.) r	Basic Load Ratings (lbs) Dynamic C	Basic Load Ratings (lbs) Static C_o	Weight (lbs) Open Type	Limiting Speed (rpm) Grease	Limiting Speed (rpm) Oil
RA3	**.1875**	**.5000**	**.1960**	**0.012**	**295**	**110**	**.006**	**41,000**	**48,000**
R4	**.2500**	**.6250**	**.1960**	**0.012**	**335**	**139**	**.010**	**36,000**	**43,000**
RA4	**.2500**	**.7500**	**.2812**	**0.016**	**525**	**199**	**.017**	**34,000**	**40,000**
R6	**.3750**	**.8750**	**.2812**	**0.016**	**745**	**315**	**.029**	**31,000**	**37,000**
R8	**.5000**	**1.1250**	**.3125**	**0.016**	**1,150**	**540**	**.040**	**26,000**	**30,000**
R10	**.6250**	**1.3750**	**.3437**	**0.031**	**1,350**	**735**	**.067**	**20,000**	**24,000**
R12	**.7500**	**1.6250**	**.4375**	**0.031**	**1,780**	**1,000**	**.100**	**18,000**	**21,000**
R14	**.8750**	**1.8750**	**.5000**	**0.031**	**2,270**	**1,300**	**.159**	**15,000**	**18,000**
R16	**1.0000**	**2.0000**	**.5000**	**0.031**	**2,260**	**1,340**	**.178**	**14,000**	**16,000**
R18	**1.1250**	**2.1250**	**.5000**	**0.031**	**2,970**	**1,860**	**.194**	**13,000**	**15,000**
R20	**1.2500**	**2.2500**	**.5000**	**0.031**	**2,650**	**1,810**	**.200**	**12,000**	**14,000**

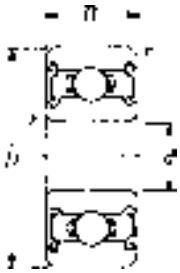

Double Shielded
ZZ

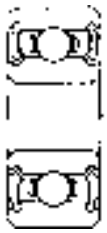

Double Sealed
LLB
(Non-contact Type)

Double Sealed
LLU
(Contact Type)

www.precise-rotation.ru

NTN

SERIES 600

Units: INCHES
Millimeters

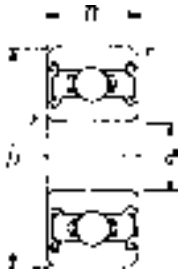

Double Shielded
ZZ

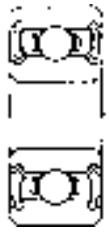

Double Sealed
LLB
(Non-contact Type)

Double Sealed
LLU
(Contact Type)

SINGLE ROW RADIAL BALL BEARINGS

Bearing No.	Bore d	O.D. D	Width B	Fillet Radius r	Basic Load Ratings (lbs) Dynamic C	Basic Load Ratings (lbs) Static C_o	Weight (lbs)	Limiting Speed Grease	Limiting Speed Oil	Limiting Speed LLU
605	**.1969** 5	**.5512** 14	**.1969** 5	**.008** .2	**299**	**114**	**.008**	**39,000**	**46,000**	**—**
606	**.2362** 6	**.6693** 17	**.2362** 6	**.012** .3	**495**	**195**	**.013**	**35,000**	**42,000**	**—**
607	**.2756** 7	**.7480** 19	**.2362** 6	**.012** .3	**505**	**205**	**.018**	**34,000**	**40,000**	**28,000**
608	**.3150** 8	**.8661** 22	**.2756** 7	**.012** .3	**750**	**315**	**.026**	**32,000**	**37,000**	**23,000**
609	**.3543** 9	**.9449** 24	**.2756** 7	**.012** .3	**765**	**325**	**.031**	**31,000**	**36,000**	**22,000**
623	**.1181** 3	**.3937** 10	**.1575** 4	**.006** .15	**144**	**50**	**.004**	**50,000**	**58,000**	**—**
624	**.1575** 4	**.5118** 13	**.1969** 5	**.008** .2	**295**	**110**	**.007**	**42,000**	**49,000**	**—**
625	**.1969** 5	**.6299** 16	**.1969** 5	**.012** .3	**395**	**153**	**.011**	**37,000**	**44,000**	**—**
626	**.2362** 6	**.7480** 19	**.2362** 6	**.012** .3	**525**	**199**	**.018**	**34,000**	**40,000**	**30,000**
627	**.2756** 7	**.8661** 22	**.2756** 7	**.012** .3	**750**	**315**	**.029**	**32,000**	**37,000**	**23,000**
628	**.3150** 8	**.9449** 24	**.3150** 8	**.012** .6	**900**	**355**	**.037**	**31,000**	**36,000**	**24,000**
629	**.3543** 9	**1.0236** 26	**.3150** 8	**.024** .6	**1,030**	**440**	**.044**	**30,000**	**35,000**	**21,000**
634	**.1575** 4	**.6299** 16	**.1969** 5	**.012** .3	**395**	**153**	**.011**	**37,000**	**44,000**	**—**
635	**.1969** 5	**.7480** 19	**.2362** 6	**.012** .3	**525**	**199**	**.018**	**34,000**	**40,000**	**30,000**

SINGLE ROW RADIAL BALL BEARINGS

Units: **INCHES**
Millimeters

NTN
SERIES 69

Bearing No.	Bore d	O.D. D	Width B	Fillet Radius r	Basic Load Ratings (lbs) Dynamic C	Basic Load Ratings (lbs) Static C_0	Weight (lbs)	Limiting Speed (RPM) Grease	Limiting Speed (RPM) Oil
6900	**.3937** 10	**.8661** 22	**.2362** 6	**.012** .3	**605**	**285**	**.020**	**30,000**	**36,000**
6901	**.4724** 12	**.9449** 24	**.2362** 6	**.012** .3	**650**	**330**	**.024**	**27,000**	**32,000**
6902B	**.5906** 15	**1.1024** 28	**.2756** 7	**.012** .3	**920**	**460**	**.035**	**24,000**	**28,000**
6903	**.6693** 17	**1.1811** 30	**.2756** 7	**.012** .3	**1,050**	**580**	**.040**	**22,000**	**26,000**
6904	**.7874** 20	**1.4567** 37	**.3543** 9	**.012** .3	**1,430**	**825**	**.079**	**19,000**	**23,000**
6905	**.9843** 25	**1.6535** 42	**.3543** 9	**.012** .3	**1,580**	**1,020**	**.093**	**16,000**	**19,000**
6906	**1.1811** 30	**1.8504** 47	**.3543** 9	**.012** .3	**1,630**	**1,130**	**.106**	**14,000**	**17,000**
6907A	**1.3780** 35	**2.1654** 55	**.3937** 10	**.024** .6	**2,510**	**1,670**	**.163**	**12,000**	**15,000**
6908A	**1.5748** 40	**2.4409** 62	**.4724** 12	**.024** .6	**3,250**	**2,300**	**.243**	**11,000**	**13,000**
6909A	**1.7717** 45	**2.6772** 68	**.4724** 12	**.024** .6	**3,400**	**2,530**	**.282**	**9,800**	**12,000**
6910B	**1.9685** 50	**2.8346** 72	**.4724** 12	**.024** .6	**3,500**	**2,750**	**.291**	**8,900**	**11,000**
6911	**2.1654** 55	**3.1496** 80	**.5118** 13	**.039** 1.0	**3,600**	**2,980**	**.397**	**8,200**	**9,600**
6912	**2.3622** 60	**3.3465** 85	**.5118** 13	**.039** 1.0	**3,700**	**3,200**	**.425**	**7,600**	**8,900**
6913	**2.5591** 65	**3.5433** 90	**.5118** 13	**.039** 1.0	**3,900**	**3,600**	**.454**	**7,000**	**8,200**
6914	**2.7559** 70	**3.9370** 100	**.6299** 16	**.039** 1.0	**5,350**	**4,750**	**.736**	**6,500**	**7,700**
6915	**2.9528** 75	**4.1339** 105	**.6299** 16	**.039** 1.0	**5,500**	**5,100**	**.778**	**6,100**	**7,200**
6916	**3.1496** 80	**4.3307** 110	**.6299** 16	**.039** 1.0	**5,600**	**5,400**	**.822**	**5,700**	**6,700**
6917	**3.3465** 85	**4.7244** 120	**.7087** 18	**.043** 1.1	**7,200**	**6,650**	**1.18**	**5,400**	**6,300**
6918	**3.5433** 90	**4.9213** 125	**.7087** 18	**.043** 1.1	**7,400**	**7,100**	**1.22**	**5,100**	**6,000**
6919	**3.7402** 95	**5.1181** 130	**.7087** 18	**.043** 1.1	**7,550**	**7,550**	**1.28**	**4,800**	**5,700**
6920	**3.9370** 100	**5.5118** 140	**.7874** 20	**.043** 1.1	**9,250**	**8,900**	**1.73**	**4,500**	**5,300**
6921	**4.1339** 105	**5.7087** 145	**.7874** 20	**.043** 1.1	**9,550**	**9,450**	**1.80**	**4,300**	**5,100**
6922	**4.3307** 110	**5.9055** 150	**.7874** 20	**.043** 1.1	**9,800**	**10,000**	**1.87**	**4,100**	**4,800**
6924	**4.7244** 120	**6.4961** 165	**.8661** 22	**.043** 1.1	**11,900**	**12,200**	**2.54**	**3,800**	**4,400**

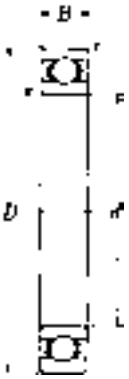

SERIES 60

Units: **INCHES**
Millimeters

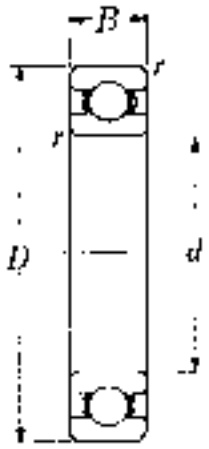

Open Type
60

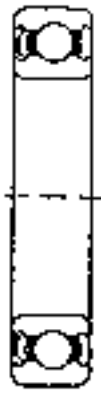

Single
Shielded
60Z

Double
Shielded
60ZZ

Double
Sealed
60LLU
(Contact Type)

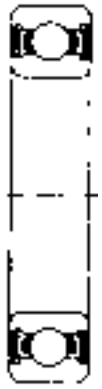

Double
Sealed
60LLB
(Non-Contact Type)

SINGLE ROW RADIAL BALL BEARINGS

Bearing No.	Bore d	O.D. D	Width B	Fillet Radii r	Fillet Radii r_1	Basic Load Ratings (lbs) Dynamic C	Basic Load Ratings (lbs) Static C_0	Weight (lbs)
6000	.3937	1.0236	.3150	.012	—	1,030	440	.042
	10	26	8	.3	—			
6001	.4724	1.1024	.3150	.012	—	1,150	540	.049
	12	28	8	.3	—			
6002	.5906	1.2598	.3543	.012	—	1,260	635	.066
	15	32	9	.3	—			
6003	.6693	1.3780	.3937	.012	—	1,530	755	.086
	17	35	10	.3	—			
6004	.7874	1.6535	.4724	.024	.020	2,110	1,140	.152
	20	42	12	.6	.5			
60/22	.8661	1.7323	.4724	.024	.020	2,110	1,150	.163
	22	44	12	.6	.5			
6005	.9843	1.8504	.4724	.024	.020	2,260	1,320	.176
	25	47	12	.6	.5			
60/28	1.1024	2.0472	.4724	.024	.020	2,800	1,660	.216
	28	52	12	.6	.5			
6006	1.1811	2.1654	.5118	.039	.020	2,970	1,860	.256
	30	55	13	1.0	.5			
60/32A	1.2598	2.2835	.5118	.039	.020	3,400	2,060	.284
	32	58	13	1.0	.5			
6007	1.3780	2.4409	.5512	.039	.020	3,600	2,310	.342
	35	62	14	1.0	.5			
6008	1.5748	2.6772	.5906	.039	.020	3,150	2,590	.423
	40	68	15	1.0	.5			
6009	1.7717	2.9528	.6299	.039	.020	4,700	3,400	.540
	45	75	16	1.0	.5			
6010	1.9685	3.1496	.6299	.039	.020	4,900	3,750	.575
	50	80	16	1.0	.5			
6011	2.1654	3.5433	.7087	.043	.020	6,350	4,800	.849
	55	90	18	1.1	.5			
6012	2.3622	3.7402	.7087	.043	.020	6,600	5,200	.915
	60	95	18	1.1	.5			
6013	2.5591	3.9370	.7087	.043	.020	6,850	5,650	.959
	65	100	18	1.1	.5			
6014	2.7559	4.3307	.7874	.043	.020	8,550	6,950	1.33
	70	110	20	1.1	.5			
6015	2.9528	4.5276	.7874	.043	.020	8,900	7,550	1.41
	75	115	20	1.1	.5			
6016	3.1496	4.9213	.8661	.043	.020	10,700	8,950	1.87
	80	125	22	1.1	.5			
6017	3.3465	5.1181	.8661	.043	.020	11,100	9,700	1.96
	85	130	22	1.1	.5			
6018	3.5433	5.5118	.9449	.059	.020	13,100	11,200	2.56
	90	140	24	1.5	.5			
6019	3.7402	5.7087	.9449	.059	.020	13,600	12,100	2.67
	95	145	24	1.5	.5			
6020	3.9370	5.9055	.9449	.059	.020	13,500	12,200	2.76
	100	150	24	1.5	.5			
6021	4.1339	6.2992	1.0236	.079	.020	16,300	14,800	3.51
	105	160	26	2.0	.5			
6022	4.3307	6.6929	1.1024	.079	.020	18,400	16,400	4.32
	110	170	28	2.0	.5			
6024	4.7244	7.0866	1.1024	.079	—	19,100	17,800	4.56
	120	180	28	2.0	—			
6026	5.1181	7.8740	1.2992	.079	—	23,900	22,700	6.97
	130	200	33	2.0	—			
6028	5.5118	8.2677	1.2992	.079	—	24,700	24,400	7.39
	140	210	33	2.0	—			
6030	5.9055	8.8583	1.3780	.083	—	28,300	28,300	8.99
	150	225	35	2.1	—			
6032	6.2992	9.4488	1.4961	.083	—	32,000	32,500	11.1
	160	240	38	2.1	—			
6034	6.6929	10.2362	1.6535	.083	—	38,000	38,500	17.5
	170	260	42	2.1	—			
6036	7.0866	11.0236	1.8110	.083	—	42,500	44,500	22.7
	180	280	46	2.1	—			
6038	7.4803	11.4173	1.8110	.083	—	44,000	48,500	23.8
	190	290	46	2.1	—			
6040	7.8740	12.2047	2.0079	.083	—	49,000	54,500	30.6
	200	310	51	2.1	—			

Continued on Page 22

SINGLE ROW RADIAL BALL BEARINGS

Units: **INCHES**
Millimeters

NTN
SERIES 60

Snap Ring Groove Dimensions			Snap Ring Dimensions			Limiting Speed (RPM)			Bore Diameter No.
D_n (max)	a_n (max)	b_n (min)	E (max)	f (max)	e	Grease	Oil	LU, LLU	
—	—	—	—	—	—	29,000	34,000	21,000	00
—	—	—	—	—	—	26,000	30,000	18,000	01
—	—	—	—	—	—	22,000	26,000	15,000	02
—	—	—	—	—	—	20,000	24,000	14,000	03
1.565	.081	.065	1.82	.042	.125	18,000	21,000	11,000	04
39.75	2.06	1.65	46.3	1.07	3.17				
1.644	.081	.053	1.90	.044	.129	17,000	20,000	10,000	/22
41.75	2.06	1.35	48.3	1.12	3.28				
1.756	.081	.065	2.07	.042	.156	15,000	18,000	9,400	05
44.60	2.06	1.65	52.7	1.07	3.96				
1.958	.081	.053	2.28	.044	.161	14,000	16,000	8,400	/28
49.73	2.06	1.35	57.9	1.12	4.09				
2.071	.082	.065	2.39	.042	.156	13,000	15,000	7,700	06
52.60	2.08	1.65	60.7	1.07	3.96				
2.189	.082	.053	2.51	.044	.159	12,000	15,000	7,200	/32
55.60	2.08	1.35	63.7	1.12	4.05				
2.347	.082	.087	2.67	.065	.156	12,000	14,000	6,800	07
59.61	2.08	2.21	67.7	1.65	3.96				
2.552	.098	.087	2.94	.065	.188	10,000	12,000	6,100	08
64.82	2.49	2.21	74.6	1.65	4.78				
2.828	.098	.087	3.21	.065	.188	9,200	11,000	5,400	09
71.83	2.49	2.21	81.6	1.65	4.78				
3.024	.098	.087	3.41	.065	.188	8,400	9,800	5,000	10
76.81	2.49	2.21	86.6	1.65	4.78				
3.417	.113	.118	3.80	.095	.188	7,700	9,000	4,500	11
86.79	2.87	3.00	96.5	2.41	4.78				
3.615	.113	.118	4.00	.095	.188	7,000	8,300	4,100	12
91.82	2.87	3.00	101.6	2.41	4.78				
3.811	.113	.118	4.19	.095	.188	6,500	7,700	3,900	13
96.80	2.87	3.00	106.5	2.41	4.78				
4.205	.113	.118	4.59	.095	.188	6,100	7,100	3,600	14
106.81	2.87	3.00	116.6	2.41	4.78				
4.402	.113	.118	4.79	.095	.188	5,700	6,700	3,300	15
111.81	2.87	3.00	121.6	2.41	4.78				
4.733	.113	.134	5.30	.109	.281	5,300	6,200	3,100	16
120.22	2.87	3.40	134.7	2.77	7.14				
4.930	.113	.134	5.50	.109	.281	5,000	5,900	2,900	17
125.22	2.87	3.40	139.7	2.77	7.14				
5.324	.146	.134	5.89	.109	.281	4,700	5,600	2,800	18
135.23	3.71	3.40	149.7	2.77	7.14				
5.521	.146	.134	6.09	.109	.281	4,500	5,300	2,600	19
140.23	3.71	3.40	154.7	2.77	7.1				
5.718	.146	.134	6.29	.109	.281	4,200	5,000	2,600	20
145.24	3.71	3.40	159.7	2.77	7.14				
6.111	.146	.134	6.68	.109	.281	4,000	4,700	2,400	21
155.22	3.71	3.40	169.7	2.77	7.14				
6.443	.146	.150	7.20	.120	.375	3,800	4,500	2,300	22
163.65	3.71	3.81	182.9	3.05	9.53				
—	—	—	—	—	—	3,500	4,100	2,100	24
—	—	—	—	—	—	3,200	3,800	1,900	26
—	—	—	—	—	—	3,000	3,500	1,800	28
—	—	—	—	—	—	2,800	3,200	1,700	30
—	—	—	—	—	—	2,600	3,000	1,600	32
—	—	—	—	—	—	2,400	2,800	—	34
—	—	—	—	—	—	2,300	2,700	—	36
—	—	—	—	—	—	2,100	2,500	—	38
—	—	—	—	—	—	2,000	2,400	—	40

Continued on Page 23

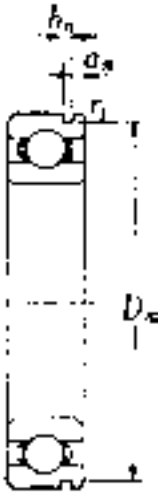

With Snap Ring Groove 60N

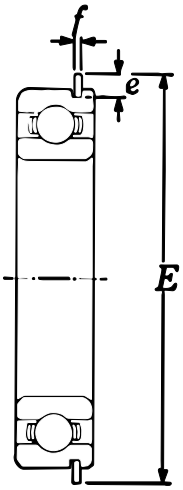

With Snap Ring

60NR

Single Shielded With Snap Ring 60ZNR

SERIES 60

Units: **INCHES**
Millimeters

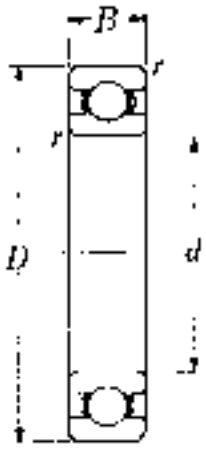

Open Type
60

SINGLE ROW RADIAL BALL BEARINGS

Bearing No.	Bore d	O.D. D	Width B	Fillet Radii r	Fillet Radii r_1	Basic Load Ratings (lbs) Dynamic C	Basic Load Ratings (lbs) Static C_0	Weight (lbs)
6044	**8.66** 220	**13.39** 340	**2.205** 56	**.118** 3.0	—	**54,500**	**65,000**	**34.6**
6048	**9.45** 240	**14.17** 360	**1.102** 28	**.118** 3.0	—	**56,000**	**70,000**	**37.0**
6052	**10.24** 260	**15.75** 400	**2.559** 65	**.157** 4.0	—	**65,500**	**84,500**	**55.1**
6056	**11.02** 280	**16.54** 420	**2.559** 65	**.157** 4.0	—	**73,000**	**95,000**	**68.3**
6060	**11.81** 300	**18.11** 460	**2.913** 74	**.157** 4.0	—	**80,000**	**108,000**	**96.6**
6064	**12.60** 320	**18.90** 480	**2.913** 74	**.157** 4.0	—	**83,500**	**119,000**	**102**
6068	**13.39** 340	**20.47** 520	**3.228** 82	**.197** 5.0	—	**94,000**	**137,000**	**136**
6072	**14.17** 360	**21.26** 540	**3.228** 82	**.197** 5.0	—	**98,500**	**150,000**	**143**
6076	**14.96** 380	**22.05** 560	**3.228** 82	**.197** 5.0	—	**103,000**	**163,000**	**149**
6080	**15.75** 400	**23.62** 600	**3.543** 90	**.197** 5.0	—	**114,000**	**185,000**	**193**
6084	**16.54** 420	**24.41** 620	**3.543** 90	**.197** 5.0	—	**119,000**	**201,000**	**201**

SINGLE ROW RADIAL BALL BEARINGS

Units: **INCHES**
Millimeters

SERIES 60

Snap Ring Groove Dimensions			Snap Ring Dimensions			Limiting Speed (RPM)			Bore Diameter No.
D_n (max)	a_n (max)	b_n (min)	E (max)	f (max)	e	Grease	Oil	LU, LLU	
—	—	—	—	—	—	1,800	2,200	—	44
—	—	—	—	—	—	1,700	2,000	—	48
—	—	—	—	—	—	1,500	1,800	—	52
—	—	—	—	—	—	1,400	1,600	—	56
—	—	—	—	—	—	1,300	1,500	—	60
—	—	—	—	—	—	1,200	1,400	—	64
—	—	—	—	—	—	1,100	1,300	—	68
—	—	—	—	—	—	1,100	1,200	—	72
—	—	—	—	—	—	990	1,200	—	76
—	—	—	—	—	—	930	1,100	—	80
—	—	—	—	—	—	880	1,000	—	84

NTN

SERIES 62

Units: **INCHES**
Millimeters

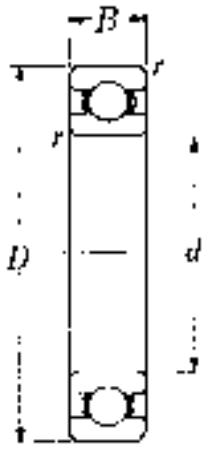

Open Type
62

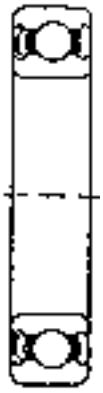

Single
Shielded
62Z

Double
Shielded
62ZZ

Double
Sealed
62LLU
(Contact Type)

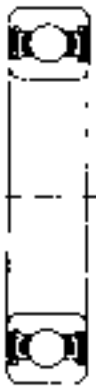

Double
Sealed
62LLB
(Non-Contact Type)

SINGLE ROW RADIAL BALL BEARINGS

Bearing No.	Bore d	O.D. D	Width B	Fillet Radii r	Fillet Radii r_1	Basic Load Ratings (lbs) Dynamic C	Basic Load Ratings (lbs) Static C_0	Weight (lbs)
6200	.3937	1.1811	.3543	.024	.020	1,150	540	.071
	10	30	9	.6	.5			
6201	.4724	1.2598	.3937	.024	.020	1,370	615	.082
	12	32	10	.6	.5			
6201/12.69	.4996	1.2598	.3937	.024	.020	1,370	615	.082
	12.69	32	10	.6	.5			
6201/12.695	.4998	1.2598	.3937	.024	.020	1,370	615	.082
	12.695	32	10	.6	.5			
6201/12.7	.5000	1.2598	.3937	.024	.020	1,370	615	.082
	12.7	32	10	.6	.5			
6201/13	.5118	1.2598	.3937	.024	.020	1,370	615	.082
	13	32	10	.6	.5			
6202	.5906	1.3780	.4331	.024	—	1,740	805	.099
	15	35	11	.6	—			
6202/12.71	.5004	1.3780	.4331	.024	—	1,740	805	.099
	12.71	35	11	.6	—			
6202/15.875	.6250	1.3780	.4331	.024	—	1,740	805	.099
	15.875	35	11	.6	—			
6202/16	.6299	1.3780	.4331	.024	—	1,740	805	.099
	16	35	11	.6	—			
6203	.6693	1.5748	.4724	.024	.020	2,160	1,030	.143
	17	40	12	.6	.5			
6203/12.7	.5000	1.5748	.4724	.024	.020	2,160	1,030	.143
	12.7	40	12	.6	.5			
6203/15.875	.6250	1.5748	.4724	.024	.020	2,160	1,030	.143
	15.875	40	12	.6	.5			
6203/16	.6299	1.5748	.4724	.024	.020	2,160	1,030	.143
	16	40	12	.6	.5			
6203/19.05	.7500	1.5748	.4724	.024	.020	2,160	1,030	.143
	19.05	40	12	.6	.5			
6204	.7874	1.8504	.5512	.039	.020	2,890	1,500	.234
	20	47	14	1	.5			
62/22	.8661	1.9685	.5512	.039	.020	2,900	1,530	.258
	22	50	14	1	.5			
6205	.9843	2.0472	.5906	.039	.020	3,150	1,770	.282
	25	52	15	1	.5			
6205/25.4	1.0000	2.0472	.5906	.039	.020	3,150	1,770	.282
	25.4	52	15	1	.5			
62/28	1.1024	2.2835	.6299	.039	.020	4,000	2,190	.377
	28	58	16	1	.5			
6206	1.1811	2.4409	.6299	.039	.020	4,400	2,540	.439
	30	62	16	1	.5			
62/32	1.2598	2.5591	.6693	.039	.020	4,650	2,610	.498
	32	65	17	1	.5			
6207	1.3780	2.8346	.6693	.043	.020	5,750	3,450	.635
	35	72	17	1.1	.5			
6208	1.5748	3.1496	.7087	.043	.020	6,550	4,000	.807
	40	80	18	1.1	.5			
6209	1.7717	3.3465	.7480	.043	.020	7,350	4,600	.897
	45	85	19	1.1	.5			
6210	1.9685	3.5433	.7874	.043	.020	7,900	5,200	1.02
	50	90	20	1.1	.5			
6211	2.1654	3.9370	.8268	.059	.020	9,750	6,550	1.34
	55	100	21	1.5	.5			
6212	2.3622	4.3307	.8661	.059	.020	11,800	8,150	1.73
	60	110	22	1.5	.5			
6213	2.5591	4.7244	.9055	.059	.020	12,900	9,000	2.18
	65	120	23	1.5	.5			
6214	2.7559	4.9213	.9449	.059	.020	14,000	9,900	2.36
	70	125	24	1.5	.5			
6215	2.9528	5.1181	.9843	.059	.020	14,900	11,100	2.60
	75	130	25	1.5	.5			
6216	3.1496	5.5118	1.0236	.079	.020	16,500	11,900	3.09
	80	140	26	2.0	.5			
6217	3.3465	5.9055	1.1024	.079	.020	18,700	14,300	3.95
	85	150	28	2.0	.5			
6218	3.5433	6.2992	1.1811	.079	.020	21,600	16,100	4.74
	90	160	30	2.0	.5			
6219	3.7402	6.6929	1.2598	.083	.020	24,500	18,400	5.78
	95	170	32	2.1	.5			
6220	3.9370	7.0866	1.3386	.083	.012	27,500	20,900	6.92
	100	180	34	2.1	.5			

Continued on Page 26

SINGLE ROW RADIAL BALL BEARINGS

Units: **INCHES**
Millimeters

NTN
SERIES 62

Snap Ring Groove Dimensions			Snap Ring Dimensions			Limiting Speed (RPM)			Bore Diameter No.
D_n (max)	a_n (max)	b_n (min)	E (max)	f	e	Grease	Oil	LLU	
1.109	**.081**	**.065**	**1.37**	**.042**	**.125**	**25,000**	**30,000**	**18,000**	**00**
28.17	2.06	1.65	34.7	1.07	3.17				
1.187	**.081**	**.065**	**1.44**	**.042**	**.125**	**22,000**	**26,000**	**16,000**	**01**
30.15	2.06	1.65	36.7	1.07	3.17				
1.187	**.081**	**.065**	**1.44**	**.042**	**.125**	**22,000**	**26,000**	**16,000**	**01**
30.15	2.06	1.65	36.7	1.07	3.17				
1.187	**.081**	**.065**	**1.44**	**.042**	**.125**	**22,000**	**26,000**	**16,000**	**01**
30.15	2.06	1.65	36.7	1.07	3.17				
1.187	**.081**	**.065**	**1.44**	**.042**	**.125**	**22,000**	**26,000**	**16,000**	**01**
30.15	2.06	1.65	36.7	1.07	3.17				
1.187	**.081**	**.065**	**1.44**	**.042**	**.125**	**22,000**	**26,000**	**16,000**	**01**
30.15	2.06	1.65	36.7	1.07	3.17				
1.306	**.081**	**.065**	**1.56**	**.042**	**.125**	**19,000**	**23,000**	**15,000**	**02**
33.17	2.06	1.65	39.7	1.07	3.17				
1.306	**.081**	**.065**	**1.56**	**.042**	**.125**	**19,000**	**23,000**	**15,000**	**02**
33.17	2.06	1.65	39.7	1.07	3.17				
1.306	**.081**	**.065**	**1.56**	**.042**	**.125**	**19,000**	**23,000**	**15,000**	**02**
33.17	2.06	1.65	39.7	1.07	3.17				
1.306	**.081**	**.065**	**1.56**	**.042**	**.125**	**19,000**	**23,000**	**15,000**	**02**
33.17	2.06	1.65	39.7	1.07	3.17				
1.500	**.081**	**.065**	**1.76**	**.042**	**.125**	**18,000**	**21,000**	**12,000**	**03**
38.10	2.06	1.65	44.6	1.07	3.17				
1.500	**.081**	**.065**	**1.76**	**.042**	**.125**	**18,000**	**21,000**	**12,000**	**03**
38.10	2.06	1.65	44.6	1.07	3.17				
1.500	**.081**	**.065**	**1.76**	**.042**	**.125**	**18,000**	**21,000**	**12,000**	**03**
38.10	2.06	1.65	44.6	1.07	3.17				
1.500	**.081**	**.065**	**1.76**	**.042**	**.125**	**18,000**	**21,000**	**12,000**	**03**
38.10	2.06	1.65	44.6	1.07	3.17				
1.500	**.081**	**.065**	**1.76**	**.042**	**.125**	**18,000**	**21,000**	**12,000**	**03**
38.10	2.06	1.65	44.6	1.07	3.17				
1.756	**.097**	**.065**	**2.07**	**.042**	**.156**	**16,000**	**18,000**	**10,000**	**04**
44.60	2.46	1.65	52.7	1.07	3.96				
1.874	**.097**	**.065**	**2.19**	**.042**	**.156**	**14,000**	**17,000**	**9,700**	**/22**
47.60	2.46	1.65	55.7	1.07	3.96				
1.958	**.097**	**.065**	**2.28**	**.042**	**.156**	**13,000**	**15,000**	**8,900**	**05**
49.73	2.46	1.65	57.9	1.07	3.96				
1.958	**.097**	**.065**	**2.28**	**.042**	**.156**	**13,000**	**15,000**	**8,900**	**05**
49.73	2.46	1.65	57.9	1.07	3.96				
2.189	**.097**	**.065**	**2.51**	**.042**	**.156**	**12,000**	**14,000**	**8,100**	**/28**
55.60	2.46	1.65	63.7	1.07	3.96				
2.347	**.129**	**.087**	**2.67**	**.065**	**.156**	**11,000**	**13,000**	**7,300**	**06**
59.61	3.28	2.21	67.7	1.65	3.96				
2.465	**.129**	**.087**	**2.78**	**.065**	**.156**	**11,000**	**12,000**	**7,100**	**/32**
62.61	3.28	2.21	70.7	1.65	3.96				
2.709	**.129**	**.087**	**3.09**	**.065**	**.188**	**9,800**	**11,000**	**6,300**	**07**
68.81	3.28	2.21	78.6	1.65	4.77				
3.024	**.129**	**.087**	**3.41**	**.065**	**.188**	**8,700**	**10,000**	**5,600**	**08**
76.81	3.28	2.21	86.6	1.65	4.77				
3.221	**.129**	**.087**	**3.61**	**.065**	**.188**	**7,800**	**9,200**	**5,200**	**09**
81.81	3.28	2.21	91.6	1.65	4.77				
3.417	**.129**	**.118**	**3.80**	**.095**	**.188**	**7,100**	**8,300**	**4,700**	**10**
86.79	3.28	3.00	96.5	2.41	4.77				
3.811	**.129**	**.118**	**4.19**	**.095**	**.188**	**6,400**	**7,600**	**4,300**	**11**
96.80	3.28	3.00	106.5	2.41	4.77				
4.205	**.129**	**.118**	**4.59**	**.095**	**.188**	**6,000**	**7,000**	**3,800**	**12**
106.81	3.28	3.00	116.6	2.41	4.77				
4.536	**.160**	**.134**	**5.11**	**.109**	**.281**	**5,500**	**6,500**	**3,600**	**13**
115.21	4.06	3.40	129.7	2.77	7.13				
4.733	**.160**	**.134**	**5.30**	**.109**	**.281**	**5,100**	**6,000**	**3,400**	**14**
120.22	4.06	3.40	134.7	2.77	7.13				
4.930	**.160**	**.134**	**5.50**	**.109**	**.281**	**4,800**	**5,600**	**3,200**	**15**
125.22	4.06	3.40	139.7	2.77	7.13				
5.324	**.193**	**.134**	**5.89**	**.109**	**.281**	**4,500**	**5,300**	**3,000**	**16**
135.23	4.90	3.40	149.7	2.77	7.13				
5.718	**.193**	**.134**	**6.29**	**.109**	**.281**	**4,200**	**5,000**	**2,800**	**17**
145.24	4.90	3.40	159.7	2.77	7.13				
6.111	**.193**	**.134**	**6.68**	**.109**	**.281**	**4,000**	**4,700**	**2,600**	**18**
155.22	4.90	3.40	169.7	2.77	7.13				
6.443	**.224**	**.150**	**7.20**	**.120**	**.375**	**3,700**	**4,400**	**2,500**	**19**
163.65	5.69	3.81	182.9	3.05	9.52				
6.837	**.224**	**.150**	**7.59**	**.120**	**.375**	**3,500**	**4,200**	**2,300**	**20**
173.66	5.69	3.81	192.9	3.05	9.52				

Continued on Page 27

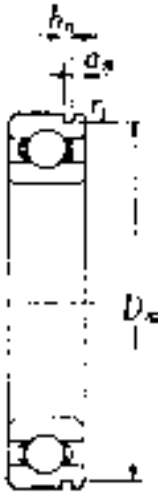

With Snap Ring Groove 62N

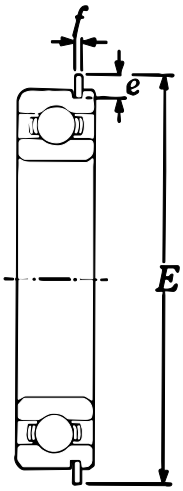

With Snap Ring 62NR

Single Shielded With Snap Ring 62ZNR

SERIES 62

Units: **INCHES**
Millimeters

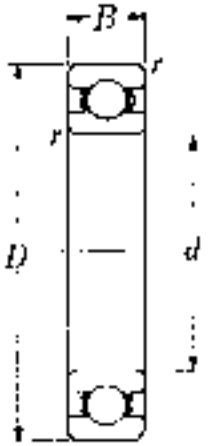

Open Type
62

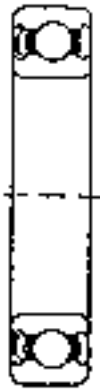

Single
Shielded
62Z

Double
Shielded
62ZZ

Double
Sealed
62LLU
(Contact Type)

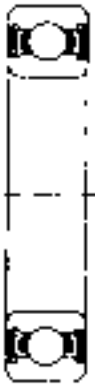

Double
Sealed
62LLB
(Non-Contact Type)

SINGLE ROW RADIAL BALL BEARINGS

Bearing No.	Bore d	O.D. D	Width B	Fillet Radii r	Fillet Radii r_1	Basic Load Ratings (lbs) Dynamic C	Basic Load Ratings (lbs) Static C_0	Weight (lbs)
6221	**4.1339**	**7.4803**	**1.4173**	**.083**	**.020**	**29,900**	**23,500**	**8.16**
	105	190	36	2.1	.5			
6222	**4.3307**	**7.8740**	**1.4961**	**.083**	**.020**	**32,500**	**26,300**	**9.61**
	110	200	38	2.1	.5			
6224	**4.7244**	**8.4646**	**1.5748**	**.083**	**—**	**35,000**	**29,500**	**11.4**
	120	215	40	2.1	—			
6226	**5.1181**	**9.0551**	**1.5748**	**.118**	**—**	**37,500**	**33,000**	**12.8**
	130	230	40	3.0	—			
6228	**5.5118**	**9.8425**	**1.6535**	**.118**	**—**	**37,500**	**33,500**	**16.5**
	140	250	42	3.0	—			
6230	**5.9055**	**10.6299**	**1.7717**	**.118**	**—**	**39,500**	**37,500**	**20.7**
	150	270	45	3.0	—			
6232	**6.2992**	**11.4173**	**1.8898**	**.118**	**—**	**41,500**	**42,000**	**31.5**
	160	290	48	3.0	—			
6234	**6.6929**	**12.2047**	**2.0472**	**.157**	**—**	**47,500**	**50,000**	**38.6**
	170	310	52	4.0	—			
6236	**7.0866**	**12.5984**	**2.0472**	**.157**	**—**	**51,000**	**54,000**	**40.3**
	180	320	52	4.0	—			
6238	**7.4803**	**13.3858**	**2.1654**	**.157**	**—**	**57,500**	**63,500**	**50.7**
	190	340	55	4.0	—			
6240	**7.8740**	**14.1732**	**2.2835**	**.157**	**—**	**60,800**	**70,000**	**62.2**
	200	360	58	4.0	—			
6244	**8.6614**	**15.7480**	**2.5590**	**.157**	**—**	**67,000**	**81,500**	**66.6**
	220	400	65	4.0	—			

SINGLE ROW RADIAL BALL BEARINGS

Units: **INCHES**
Millimeters

NTN
SERIES 62

Snap Ring Groove Dimensions			Snap Ring Dimensions			Limiting Speed (RPM)			Bore Diameter No.
D_n (max)	a_n (max)	b_n (min)	E (max)	f (max)	e	Grease	Oil	LU, LLU	
7.230 183.64	**.224** 5.69	**.150** 3.81	**7.99** 202.9	**.120** 3.05	**.375** 9.52	**3,400**	**4,000**	**2,300**	**21**
7.624 193.65	**.224** 5.69	**.150** 3.81	**8.38** 212.9	**.120** 3.05	**.375** 9.52	**3,200**	**3,800**	**2,200**	**22**
—	—	—	—	—	—	**2,900**	**3,400**	**2,000**	**24**
—	—	—	—	—	—	**2,300**	**2,700**	—	**26**
—	—	—	—	—	—	**2,100**	**2,500**	—	**28**
—	—	—	—	—	—	**2,000**	**2,400**	—	**30**
—	—	—	—	—	—	**1,900**	**2,200**	—	**32**
—	—	—	—	—	—	**1,800**	**2,100**	—	**34**
—	—	—	—	—	—	**1,700**	**1,800**	—	**36**
—	—	—	—	—	—	**1,800**	**2,100**	—	**38**
—	—	—	—	—	—	**1,700**	**2,000**	—	**40**
—	—	—	—	—	—	**1,500**	**1,800**	—	**44**

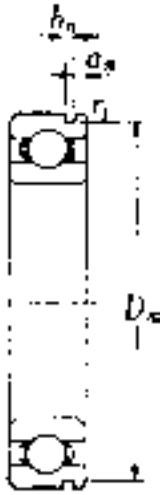

With
Snap Ring
Groove
62N

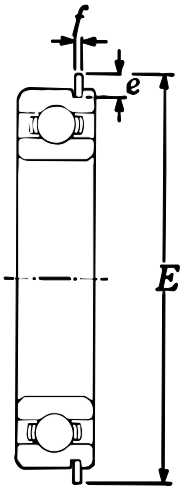

With
Snap Ring

62NR

Single
Shielded
With
Snap Ring
62ZNR

SERIES 63

Units: **INCHES**
Millimeters

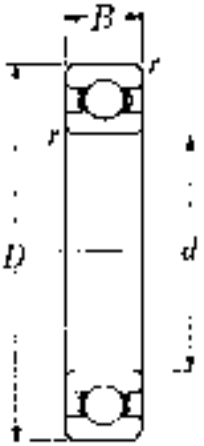

Open Type
63

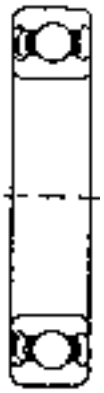

Single
Shielded
63Z

Double
Shielded
63ZZ

Double
Sealed
63LLU
(Contact Type)

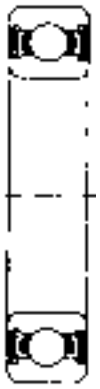

Double
Sealed
63LLB
(Non-Contact Type)

SINGLE ROW RADIAL BALL BEARINGS

Bearing No.	Bore d	O.D. D	Width B	Fillet Radii r	Fillet Radii r_1	Basic Load Ratings (lbs) Dynamic C	Basic Load Ratings (lbs) Static C_0	Weight (lbs)
6300	.3937	1.3780	.4331	.024	.020	1,840	785	.117
	10	35	11	.6	.5			
6301	.4724	1.4567	.4724	.039	.020	2,180	940	.132
	12	37	12	1.0	.5			
6302	.5906	1.6535	.5118	.039	.020	2,570	1,220	.181
	15	42	13	1.0	.5			
6303	.6693	1.8504	.5512	.039	.020	3,050	1,470	.254
	17	47	14	1.0	.5			
6304	.7874	2.0472	.5906	.043	.020	3,600	1,770	.317
	20	52	15	1.1	.5			
63/22	.8661	2.2047	.6299	.043	.020	4,150	2,080	.388
	22	56	16	1.1	.5			
6305	.9843	2.4409	.6693	.043	.020	4,750	2,460	.511
	25	62	17	1.1	.5			
63/28	1.1024	2.6772	.7087	.043	.020	6,000	3,150	.633
	28	68	18	1.1	.5			
6306	1.1811	2.8346	.7480	.043	.020	6,000	3,400	.763
	30	72	19	1.1	.5			
63/32	1.2598	2.9528	.7874	.043	.020	6,700	3,800	.842
	32	75	20	1.1	.5			
6307	1.3780	3.1496	.8268	.059	.020	7,500	4,300	1.01
	35	80	21	1.5	.5			
6308	1.5748	3.5433	.9055	.059	.020	9,150	5,400	1.40
	40	90	23	1.5	.5			
6309	1.7717	3.9370	.9843	.059	.020	11,900	7,200	1.84
	45	100	25	1.5	.5			
6310	1.9685	4.3307	1.0630	.079	.020	13,900	8,600	2.36
	50	110	27	2.0	.5			
6311	2.1654	4.7244	1.1417	.079	.020	16,100	10,100	3.02
	55	120	29	2.0	.5			
6312	2.3622	5.1181	1.2205	.083	.020	18,400	11,700	3.75
	60	130	31	2.1	.5			
6313	2.5591	5.5118	1.2992	.083	.020	20,800	13,400	4.59
	65	140	33	2.1	.5			
6314	2.7559	5.9055	1.3780	.083	.020	23,400	15,300	5.56
	70	150	35	2.1	.5			
6315	2.9528	6.2992	1.4567	.083	.020	25,500	17,400	6.66
	75	160	37	2.1	.5			
6316	3.1496	6.6929	1.5354	.083	.020	27,600	19,500	7.91
	80	170	39	2.1	.5			
6317	3.3465	7.0866	1.6142	.118	.020	29,800	21,800	9.33
	85	180	41	3.0	.5			
6318	3.5433	7.4803	1.6929	.118	.020	32,000	24,100	10.8
	90	190	43	3.0	.5			
6319	3.7402	7.8740	1.7717	.118	.020	34,500	26,600	12.5
	95	200	45	3.0	.5			
6320	3.9370	8.4646	1.8504	.118	—	39,000	31,500	15.4
	100	215	47	3.0	—			
6321	4.1339	8.8583	1.9291	.118	—	41,500	34,500	17.7
	105	225	49	3.0	—			
6322	4.3307	9.4488	1.9685	.118	—	46,000	40,500	21.0
	110	240	50	3.0	—			
6324	4.7244	10.2362	2.1654	.118	—	46,500	41,500	27.3
	120	260	55	3.0	—			
6326	5.1181	11.0236	2.2835	.157	—	51,500	48,000	33.3
	130	280	58	4.0	—			
6328	5.5118	11.8110	2.4409	.157	—	57,000	55,500	40.8
	140	300	62	4.0	—			
6330	5.9055	12.5984	2.5591	.157	—	61,500	63,500	57.8
	150	320	65	4.0	—			
6332	6.2992	13.3858	2.6772	.157	—	62,500	64,500	63.9
	160	340	68	4.0	—			
6334	6.6929	14.1732	2.8346	.157	—	73,500	80,000	76.1
	170	360	72	4.0	—			
6336	7.0866	14.9606	2.9528	.157	—	79,500	91,500	93.5
	180	380	75	4.0	—			
6338	7.4803	15.7480	3.0709	.197	—	79,500	93,000	108
	190	400	78	5.0	—			
6340	7.8740	16.5354	3.1496	.197	—	92,000	113,000	122
	200	420	80	5.0	—			
6344	8.6614	18.1102	3.4650	.157	—	92,500	116,000	134
	220	460	88	4.0	—			

SINGLE ROW RADIAL BALL BEARINGS

Units: **INCHES**
Millimeters

NTN
SERIES 63

Snap Ring Groove Dimensions			Snap Ring Dimensions			Limiting Speed (RPM)			Bore Diameter No.
D_n (max)	a_n (max)	b_n (min)	E (max)	f (max)	e	Grease	Oil	LU, LLU	
1.306	**.081**	**.065**	**1.56**	**.042**	**.125**	**23,000**	**27,000**	**16,000**	**00**
33.17	2.06	1.65	39.7	1.07	3.18				
1.369	**.081**	**.065**	**1.63**	**.042**	**.125**	**20,000**	**24,000**	**15,000**	**01**
34.77	2.06	1.65	41.3	1.07	3.18				
1.565	**.081**	**.065**	**1.82**	**.042**	**.125**	**17,000**	**21,000**	**12,000**	**02**
39.75	2.06	1.65	46.3	1.07	3.18				
1.756	**.097**	**.065**	**2.07**	**.042**	**.156**	**16,000**	**19,000**	**11,000**	**03**
44.60	2.46	1.65	52.7	1.07	3.96				
1.958	**.097**	**.065**	**2.28**	**.042**	**.156**	**14,000**	**17,000**	**10,000**	**04**
49.73	2.46	1.65	57.9	1.07	3.96				
2.110	**.097**	**.065**	**2.43**	**.042**	**.156**	**13,000**	**15,000**	**9,200**	**/22**
53.59	2.46	1.65	61.7	1.07	3.96				
2.347	**.129**	**.087**	**2.67**	**.065**	**.156**	**12,000**	**14,000**	**8,100**	**05**
59.61	3.28	2.20	67.7	1.65	3.96				
2.552	**.129**	**.087**	**2.94**	**.065**	**.188**	**11,000**	**13,000**	**7,400**	**/28**
64.82	3.28	2.20	74.6	1.65	4.77				
2.709	**.129**	**.087**	**3.09**	**.065**	**.188**	**10,000**	**12,000**	**6,600**	**06**
68.81	3.28	2.20	78.6	1.65	4.77				
2.828	**.129**	**.087**	**3.21**	**.065**	**.188**	**9,500**	**11,000**	**6,500**	**/32**
71.83	3.28	2.20	81.6	1.65	4.77				
3.024	**.129**	**.087**	**3.41**	**.065**	**.188**	**8,800**	**10,000**	**6,000**	**07**
76.81	3.28	2.20	86.6	1.65	4.77				
3.417	**.129**	**.118**	**3.80**	**.095**	**.188**	**7,800**	**9,200**	**5,300**	**08**
86.79	3.28	3.00	96.5	2.41	4.77				
3.811	**.129**	**.118**	**4.19**	**.095**	**.188**	**7,000**	**8,200**	**4,700**	**09**
96.80	3.28	3.00	106.5	2.41	4.77				
4.205	**.129**	**.118**	**4.59**	**.095**	**.188**	**6,400**	**7,500**	**4,200**	**10**
106.81	3.28	3.00	116.6	2.41	4.77				
4.536	**.160**	**.134**	**5.11**	**.109**	**.281**	**5,800**	**6,800**	**3,900**	**11**
115.21	4.06	3.40	129.7	2.77	7.13				
4.930	**.160**	**.134**	**5.50**	**.109**	**.281**	**5,400**	**6,300**	**3,600**	**12**
125.22	4.06	3.40	139.7	2.77	7.13				
5.324	**.193**	**.134**	**5.89**	**.109**	**.281**	**4,900**	**5,800**	**3,300**	**13**
135.23	4.90	3.40	149.7	2.77	7.13				
5.718	**.193**	**.134**	**6.29**	**.109**	**.281**	**4,600**	**5,400**	**3,100**	**14**
145.24	4.90	3.40	159.7	2.77	7.13				
6.111	**.193**	**.134**	**6.68**	**.109**	**.281**	**4,300**	**5,000**	**2,900**	**15**
155.22	4.90	3.40	169.7	2.77	7.13				
6.443	**.224**	**.150**	**7.20**	**.120**	**.375**	**4,000**	**4,700**	**2,700**	**16**
163.65	5.69	3.80	182.9	3.05	9.52				
6.837	**.224**	**.150**	**7.59**	**.120**	**.375**	**3,800**	**4,500**	**2,600**	**17**
173.66	5.69	3.80	192.9	3.05	9.52				
7.230	**.224**	**.150**	**7.99**	**.120**	**.375**	**3,600**	**4,200**	**2,400**	**18**
183.64	5.69	3.80	202.9	3.05	9.52				
7.624	**.224**	**.150**	**8.38**	**.120**	**.375**	**3,300**	**3,900**	**2,300**	**19**
193.65	5.69	3.80	212.9	3.05	9.52				
—	—	—	—	—	—	**3,200**	**3,700**	**2,200**	**20**
—	—	—	—	—	—	**3,000**	**3,600**	**2,100**	**21**
—	—	—	—	—	—	**2,900**	**3,400**	**1,900**	**22**
—	—	—	—	—	—	**2,600**	**3,100**	—	**24**
—	—	—	—	—	—	**2,400**	**2,800**	—	**26**
—	—	—	—	—	—	**2,200**	**2,600**	—	**28**
—	—	—	—	—	—	**2,100**	**2,400**	—	**30**
—	—	—	—	—	—	**1,900**	**2,300**	—	**32**
—	—	—	—	—	—	**1,800**	**2,100**	—	**34**
—	—	—	—	—	—	**1,700**	**2,000**	—	**36**
—	—	—	—	—	—	**1,600**	**1,900**	—	**38**
—	—	—	—	—	—	**1,500**	**1,800**	—	**40**
—	—	—	—	—	—	**1,400**	**1,600**	—	**44**

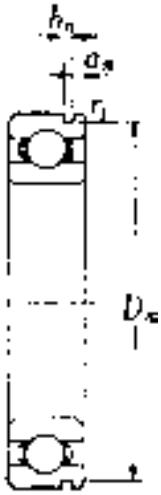

With Snap Ring Groove 63N

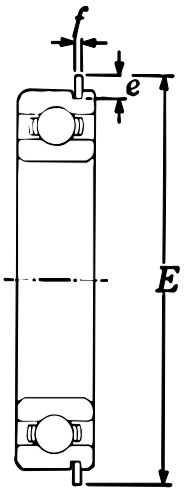

With Snap Ring 63NR

Single Shielded With Snap Ring 63ZNR

SERIES 64

Units: **INCHES**
Millimeters

SINGLE ROW RADIAL BALL BEARINGS

Bearing Number	Bore d	O. D. D	Width B	Fillet Radius r	Basic Load Ratings (lbs) Dynamic C	Basic Load Ratings (lbs) Static C_0	Weight (lbs)	Limiting Speed (RPM) Grease	Limiting Speed (RPM) Oil	Limiting Speed (RPM) LU,LLU	Bore Dia. No.
6403	**.6693** 17	**2.4409** 62	**.6693** 17	**.043** 1.1	**5,100**	**2,420**	**.595**	**14,000**	**16,000**	**9,500**	**03**
6404	**.7874** 20	**2.8346** 72	**.7480** 19	**.043** 1.1	**6,400**	**3,150**	**.882**	**12,000**	**14,000**	**8,000**	**04**
6405	**.9843** 25	**3.1496** 80	**.8268** 21	**.059** 1.5	**7,800**	**3,950**	**1.17**	**10,000**	**12,000**	**6,900**	**05**
6406	**1.1811** 30	**3.5433** 90	**.9055** 23	**.059** 1.5	**9,750**	**5,350**	**1.62**	**8,800**	**10,000**	**5,800**	**06**
6407	**1.3780** 35	**3.9370** 100	**.9843** 25	**.059** 1.5	**12,400**	**7,000**	**2.10**	**7,800**	**9,100**	**5,100**	**07**
6408	**1.5748** 40	**4.3307** 110	**1.0630** 27	**.079** 2.0	**14,300**	**8,200**	**2.71**	**7,000**	**8,200**	**4,700**	**08**
6409	**1.7717** 45	**4.7244** 120	**1.1417** 29	**.079** 2.0	**17,300**	**10,100**	**3.37**	**6,300**	**7,400**	**4,300**	**09**
6410	**1.9685** 50	**5.1181** 130	**1.2205** 31	**.083** 2.1	**18,700**	**11,100**	**4.14**	**5,700**	**6,700**	**—**	**10**
6411	**2.1654** 55	**5.5118** 140	**1.2992** 33	**.083** 2.1	**20,000**	**12,100**	**5.05**	**5,200**	**6,100**	**—**	**11**
6412	**2.3622** 60	**5.9055** 150	**1.3780** 35	**.083** 2.1	**22,900**	**14,400**	**6.11**	**4,800**	**5,700**	**—**	**12**
6413	**2.5591** 65	**6.2992** 160	**1.4567** 37	**.083** 2.1	**24,900**	**16,200**	**7.28**	**4,400**	**5,200**	**—**	**13**
6414	**2.7559** 70	**7.0866** 180	**1.6535** 42	**.118** 3.0	**28,800**	**20,100**	**10.6**	**4,100**	**4,800**	**—**	**14**
6415	**2.9528** 75	**7.4803** 190	**1.7717** 45	**.118** 3.0	**31,000**	**22,300**	**12.6**	**3,800**	**4,500**	**—**	**15**
6416	**3.1496** 80	**7.8740** 200	**1.8898** 48	**.118** 3.0	**37,000**	**28,200**	**14.9**	**3,600**	**4,200**	**—**	**16**
6417	**3.3465** 85	**8.2677** 210	**2.0472** 52	**.157** 4.0	**37,000**	**28,700**	**17.5**	**3,400**	**4,000**	**—**	**17**
6418	**3.5433** 90	**8.8583** 225	**2.1260** 54	**.157** 4.0	**41,500**	**33,500**	**25.1**	**3,200**	**3,800**	**—**	**18**
6419	**3.7402** 95	**9.4488** 240	**2.1654** 55	**.157** 4.0	**42,000**	**34,500**	**29.5**	**3,000**	**3,500**	**—**	**19**
6420	**3.9370** 100	**9.8425** 250	**2.2835** 58	**.157** 4.0	**46,000**	**39,500**	**33.1**	**2,900**	**3,400**	**—**	**20**
6421	**4.1339** 105	**10.2362** 260	**2.3622** 60	**.157** 4.0	**46,500**	**40,000**	**37.0**	**2,700**	**3,200**	**—**	**21**
6422	**4.3307** 110	**11.0236** 280	**2.5591** 65	**.157** 4.0	**55,500**	**51,000**	**47.0**	**2,600**	**3,000**	**—**	**22**
6424	**4.7244** 120	**12.2047** 310	**2.8346** 72	**.197** 5.0	**65,500**	**64,500**	**63.9**	**2,300**	**2,800**	**—**	**24**
6426	**5.1181** 130	**13.3858** 340	**3.0709** 78	**.197** 5.0	**68,000**	**67,000**	**83.8**	**2,200**	**2,500**	**—**	**26**

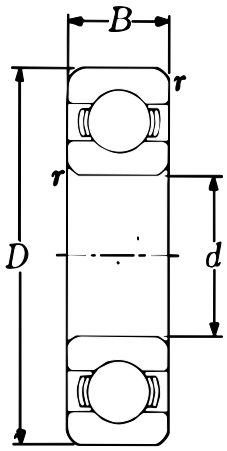

Open Type
64

Double Sealed
64LLB
(Contact Type)

Double
Shielded
64ZZ

SINGLE ROW RADIAL BALL BEARINGS

Units: **INCHES**
Millimeters

NTN
SERIES 632 633
CARTRIDGE TYPE

Bearing No.	Bore d	O.D. D	Width B	Fillet Radius r	Basic Load Ratings (lbs) Dynamic C	Static C_o	Weight (lbs)
63204ZZ	.7874 20	1.8504 47	.8110 20.6	.039 1.0	2,870	1,500	.34
63205ZZ	.9843 25	2.0472 52	.8110 20.6	.039 1.0	3,150	1,770	.39
63206ZZ	1.1811 30	2.4409 62	.9370 23.8	.039 1.0	4,400	2,540	.63
63207ZZ	1.3780 35	2.8346 72	1.0630 27.0	.043 1.1	5,750	3,450	.96
63208ZZ	1.5748 40	3.1496 80	1.1890 30.2	.043 1.1	6,550	4,000	1.28
63209ZZ	1.7717 45	3.3465 85	1.1890 30.2	.043 1.1	7,350	4,600	1.37
63210ZZ	1.9685 50	3.5433 90	1.1890 30.2	.043 1.1	7,900	5,200	1.45
63211ZZ	2.1654 55	3.9370 100	1.3110 33.3	.059 1.5	9,750	6,550	2.04
63212ZZ	2.3622 60	4.3307 110	1.4370 36.5	.059 1.5	11,800	8,150	2.80
63304ZZ	.7874 20	2.0472 52	.8740 22.2	.043 1.1	3,600	1,770	.48
63305ZZ	.9843 25	2.4409 62	1.0000 25.4	.043 1.1	4,750	2,460	.78
63306ZZ	1.1811 30	2.8346 72	1.1890 30.2	.043 1.1	6,000	3,400	1.13
63307ZZ	1.3780 35	3.1496 80	1.3740 34.9	.059 1.5	7,500	4,300	1.64
63308ZZ	1.5748 40	3.5433 90	1.4370 36.5	.059 1.5	9,150	5,400	2.06
63309ZZ	1.7717 45	3.9370 100	1.5630 39.7	.059 1.5	11,900	7,200	3.00
63310ZZ	1.9685 50	4.3307 110	1.7480 44.4	.079 2.0	13,900	8,600	3.75
63311ZZ	2.1654 55	4.7244 120	1.9370 49.2	.079 2.0	16,100	10,100	5.12
63312ZZ	2.3622 60	5.1181 130	2.1260 54.0	.083 2.1	18,400	11,700	6.50
63313ZZ	2.5591 65	5.5118 140	2.3110 58.7	.083 2.1	20,800	13,400	8.17
63314ZZ	2.7559 70	5.9055 150	2.5000 63.5	.083 2.1	23,400	15,300	10.5
63315ZZ	2.9528 75	6.2992 160	2.6890 68.3	.083 2.1	25,500	17,400	12.5
63316ZZ	3.1496 80	6.6929 170	2.6890 68.3	.083 2.1	27,600	19,500	14.1
63317ZZ	3.3465 85	7.0866 180	2.8740 73.0	.118 3.0	29,800	21,800	16.9
63318ZZ	3.5433 90	7.4803 190	2.8740 73.0	.118 3.0	32,000	24,100	18.7
63320ZZ	3.9370 100	8.4646 215	3.2500 82.55	.118 3.0	39,000	31,500	26.72

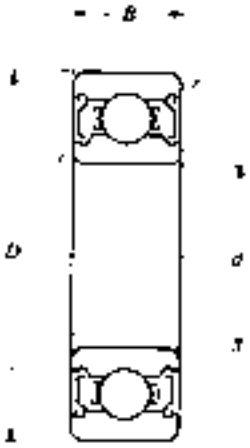

www.precise-rotation.ru

NTN

SERIES BL2

Maximum Type

Units: **INCHES**
Millimeters

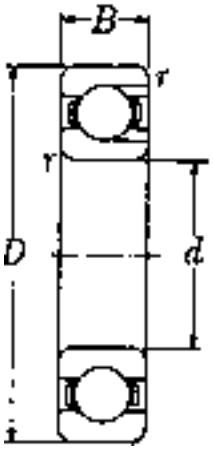

Open Type

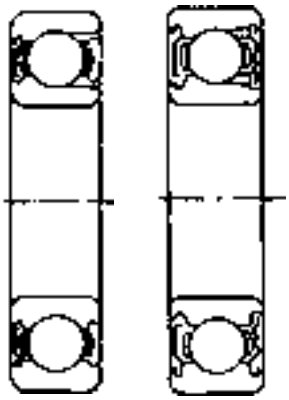

Single Shielded Z

Double Shielded ZZ

SINGLE ROW RADIAL BALL BEARINGS

Bearing No.	Bore d	O.D. D	Width B	Fillet Radii r	Fillet Radii r_1	Basic Load Ratings (lbs) Dynamic C	Basic Load Ratings (lbs) Static C_0	Weight (lbs)
BL205	**.9843**	**2.0472**	**.5906**	**.039**	**.020**	**3,800**	**2,360**	**.312**
	25	52	15	1	.5			
BL2/28	**1.1024**	**2.2835**	**.6299**	**.039**	**.020**	**5,250**	**3,300**	**.420**
	28	58	16	1	.5			
BL206	**1.1811**	**2.4409**	**.6299**	**.039**	**.020**	**5,600**	**3,650**	**.471**
	30	62	16	1	.5			
BL2/32	**1.2598**	**2.5591**	**.6693**	**.039**	**.020**	**6,100**	**3,900**	**.540**
	32	65	17	1	.5			
BL207	**1.3780**	**2.8346**	**.6693**	**.043**	**.020**	**7,400**	**4,950**	**.700**
	35	72	17	1.1	.5			
BL208	**1.5748**	**3.1496**	**.7087**	**.043**	**.020**	**8,800**	**6,250**	**.880**
	40	80	18	1.1	.5			
BL209	**1.7717**	**3.3465**	**.7480**	**.043**	**.020**	**9,900**	**7,150**	**1.00**
	45	85	19	1.1	.5			
BL210	**1.9685**	**3.5433**	**.7874**	**.043**	**.020**	**10,300**	**7,850**	**1.10**
	50	90	20	1.1	.5			
BL211	**2.1654**	**3.9370**	**.8268**	**.059**	**.020**	**12,800**	**9,850**	**1.50**
	55	100	21	1.5	.5			
BL212	**2.3622**	**4.3307**	**.8661**	**.059**	**.020**	**15,500**	**12,200**	**1.90**
	60	110	22	1.5	.5			
BL213	**2.5591**	**4.7244**	**.9055**	**.059**	**.020**	**16,900**	**13,500**	**2.40**
	65	120	23	1.5	.5			
BL214	**2.7559**	**4.9213**	**.9449**	**.059**	**.020**	**18,300**	**14,900**	**2.60**
	70	125	24	1.5	.5			
BL215	**2.9528**	**5.1181**	**.9843**	**.059**	**.020**	**19,100**	**16,100**	**2.79**
	75	130	25	1.5	.5			
BL216	**3.1496**	**5.5118**	**1.0236**	**.079**	**.020**	**22,400**	**19,100**	**3.50**
	80	140	26	2.0	.5			
BL217	**3.3465**	**5.9055**	**1.1024**	**.079**	**.020**	**24,000**	**20,800**	**4.49**
	85	150	28	2.0	.5			
BL218	**3.5433**	**6.2992**	**1.1811**	**.079**	**.020**	**29,500**	**25,700**	**5.50**
	90	160	30	2.0	.5			
BL219	**3.7402**	**6.6929**	**1.2598**	**.079**	**.020**	**32,000**	**27,600**	**6.82**
	95	170	32	2.0	.5			
BL220	**3.9370**	**7.0866**	**1.3386**	**.079**	**.020**	**36,000**	**31,500**	**8.03**
	100	180	34	2.0	.5			
BL221	**4.1339**	**7.4803**	**1.4173**	**.079**	**.020**	**39,000**	**35,500**	**9.72**
	105	190	36	2.0	.5			
BL222	**4.3307**	**7.8740**	**1.4961**	**.079**	**.020**	**42,500**	**39,500**	**11.3**
	110	200	38	2.0	.5			

SINGLE ROW RADIAL BALL BEARINGS

Units: **INCHES**
Millimeters

SERIES BL2

Maximum Type

Snap Ring Dimensions			Limiting Speed (RPM)		Bore Diameter No.
a_n (max)	E (max)	f	Grease	Oil	
.097	**2.28**	**.042**	**12,000**	**14,000**	**05**
2.46	57.9	1.07			
.097	**2.51**	**.042**	**11,000**	**13,000**	**/28**
2.46	63.7	1.07			
.129	**2.67**	**.065**	**10,000**	**12,000**	**06**
3.28	67.7	1.65			
.129	**2.78**	**.065**	**9,500**	**11,000**	**/32**
3.28	70.7	1.65			
.129	**3.09**	**.065**	**8,800**	**10,000**	**07**
3.28	78.6	1.65			
.129	**3.41**	**.065**	**7,800**	**9,200**	**08**
3.28	86.6	1.65			
.129	**3.61**	**.065**	**7,000**	**8,200**	**09**
3.28	91.6	1.65			
.129	**3.80**	**.095**	**6,400**	**7,500**	**10**
3.28	96.5	2.41			
.129	**4.19**	**.095**	**5,800**	**6,800**	**11**
3.28	106.5	2.41			
.129	**4.59**	**.095**	**5,400**	**6,300**	**12**
3.28	116.6	2.41			
.160	**5.11**	**.109**	**4,900**	**5,800**	**13**
4.06	129.7	2.77			
.160	**5.30**	**.109**	**4,600**	**5,400**	**14**
4.06	134.7	2.77			
.160	**5.50**	**.109**	**4,300**	**5,000**	**15**
4.06	139.7	2.77			
.193	**5.89**	**.109**	**4,000**	**4,700**	**16**
4.90	149.7	2.77			
.193	**6.29**	**.109**	**3,800**	**4,400**	**17**
4.90	159.7	2.77			
.193	**6.68**	**.109**	**3,600**	**4,200**	**18**
4.90	169.7	2.77			
.224	**7.20**	**.120**	**3,400**	**3,900**	**18**
5.69	182.9	3.05			
.224	**7.59**	**.120**	**3,200**	**3,700**	**20**
5.69	192.9	3.05			
.224	**7.99**	**.120**	**3,000**	**3,600**	**21**
5.69	202.9	3.05			
.224	**8.38**	**.120**	**2,900**	**3,400**	**22**
5.69	212.9	3.05			

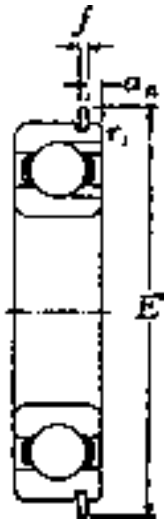

With Snap Ring NR

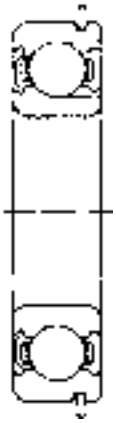

Single Shielded With Snap Ring ZNR

NTN

SERIES BL3

Maximum Type

Units: **INCHES**
Millimeters

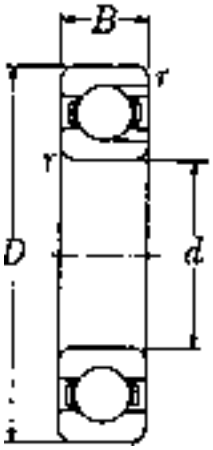

Open Type

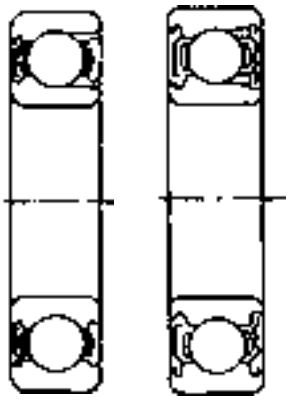

Single Shielded Z

Double Shielded ZZ

SINGLE ROW RADIAL BALL BEARINGS

Bearing No.	Bore d	O.D. D	Width B	Fillet Radii r	Fillet Radii r_1	Basic Load Ratings (lbs) Dynamic C	Basic Load Ratings (lbs) Static C_0	Weight (lbs)
BL304	**.7874**	**2.0472**	**.5906**	**.043**	**.020**	**4,550**	**2,530**	**.359**
	20	52	15	1.1	.5			
BL3/22	**.8661**	**2.2047**	**.6299**	**.043**	**.020**	**5,250**	**2,980**	**.440**
	22	56	16	1.1	.5			
BL305	**.9843**	**2.4409**	**.6693**	**.043**	**.020**	**6,050**	**3,500**	**.568**
	25	62	17	1.1	.5			
BL3/28	**1.1024**	**2.6772**	**.7087**	**.043**	**.020**	**7,600**	**4,500**	**.720**
	28	68	18	1.1	.5			
BL306	**1.1811**	**2.8346**	**.7480**	**.043**	**.020**	**7,400**	**4,650**	**.858**
	30	72	19	1.1	.5			
BL3/32	**1.2598**	**2.9528**	**.7874**	**.043**	**.020**	**8,300**	**5,250**	**.960**
	32	75	20	1.1	.5			
BL307	**1.3780**	**3.1496**	**.8268**	**.059**	**.020**	**9,800**	**6,450**	**1.10**
	35	80	21	1.5	.5			
BL308	**1.5748**	**3.5433**	**.9055**	**.059**	**.020**	**12,300**	**8,050**	**1.50**
	40	90	23	1.5	.5			
BL309	**1.7717**	**3.9370**	**.9843**	**.059**	**.020**	**14,700**	**9,900**	**2.10**
	45	100	25	1.5	.5			
BL310	**1.9685**	**4.3307**	**1.0630**	**.079**	**.020**	**17,200**	**11,800**	**2.68**
	50	110	27	2.0	.5			
BL311	**2.1654**	**4.7244**	**1.1417**	**.079**	**.020**	**21,100**	**15,200**	**3.41**
	55	120	29	2.0	.5			
BL312	**2.3622**	**5.1181**	**1.2205**	**.079**	**.020**	**24,100**	**17,600**	**4.22**
	60	130	31	2.0	.5			
BL313	**2.5591**	**5.5118**	**1.2992**	**.079**	**.020**	**27,300**	**20,200**	**5.19**
	65	140	33	2.0	.5			
BL314	**2.7559**	**5.9055**	**1.3780**	**.079**	**.020**	**30,500**	**23,000**	**6.49**
	70	150	35	2.0	.5			
BL315	**2.9528**	**6.2992**	**1.4567**	**.079**	**.020**	**33,500**	**26,000**	**7.92**
	75	160	37	2.0	.5			
BL316	**3.1496**	**6.6929**	**1.5354**	**.079**	**.020**	**36,000**	**29,200**	**8.69**
	80	170	39	2.0	.5			
BL317	**3.3465**	**7.0866**	**1.6142**	**.118**	**.020**	**39,000**	**32,500**	**10.3**
	85	180	41	3.0	.5			
BL318	**3.5433**	**7.4803**	**1.6929**	**.118**	**.020**	**42,000**	**36,000**	**13.0**
	90	190	43	3.0	.5			
BL319	**3.7402**	**7.8740**	**1.7717**	**.118**	**.020**	**45,000**	**40,000**	**15.0**
	95	200	45	3.0	.5			
BL320	**3.9370**	**8.4646**	**1.8504**	**.118**	**—**	**51,000**	**47,500**	**18.3**
	100	215	47	3.0	—			
BL321	**4.1339**	**8.8583**	**1.9291**	**.118**	**—**	**54,000**	**52,000**	**20.8**
	105	225	49	3.0	—			
BL322	**4.3307**	**9.4488**	**1.9685**	**.118**	**—**	**60,500**	**60,500**	**24.3**
	110	240	50	3.0	—			

SINGLE ROW RADIAL BALL BEARINGS

Units: **INCHES**
Millimeters

SERIES BL3

Maximum Type

Snap Ring Dimensions			Limiting Speed (RPM)		Bore Diameter No.
a_n (max)	E (max)	f	Grease	Oil	
.097 2.46	2.28 57.9	.042 1.07	13,000	15,000	04
.097 2.46	2.43 61.7	.042 1.07	12,000	14,000	/22
.129 3.28	2.67 67.7	.065 1.65	11,000	12,000	05
.129 3.28	2.94 74.6	.065 1.65	9,600	11,000	/28
.129 3.28	3.09 78.6	.065 1.65	9,000	11,000	06
.129 3.28	3.21 81.6	.065 1.65	8,600	10,000	/32
.129 3.28	3.41 86.6	.065 1.65	7,900	9,300	07
.129 3.28	3.80 96.5	.095 2.41	7,000	8,200	08
.129 3.28	4.19 106.5	.095 2.41	6,300	7,400	09
.129 3.28	4.59 116.6	.095 2.41	5,700	6,700	10
.160 4.06	5.11 129.7	.109 2.77	5,200	6,100	11
.160 4.06	5.50 139.7	.109 2.77	4,800	5,700	12
.193 4.90	5.89 149.7	.109 2.77	4,400	5,200	13
.193 4.90	6.29 159.7	.109 2.77	4,100	4,800	14
.193 4.90	6.68 169.7	.109 2.77	3,800	4,500	15
.224 5.69	7.20 182.9	.120 3.05	3,600	4,200	16
.224 5.69	7.59 192.9	.120 3.05	3,400	4,000	17
.224 5.69	7.99 202.9	.120 3.05	3,200	3,800	18
.224 5.69	8.38 212.9	.120 3.05	3,000	3,500	19
— —	— —	— —	2,900	3,400	20
— —	— —	— —	2,700	3,200	21
— —	— —	— —	2,600	3,100	22

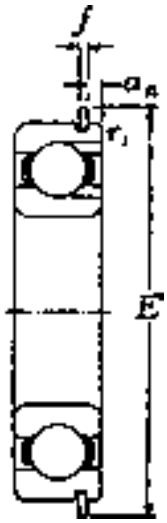

With Snap Ring NR

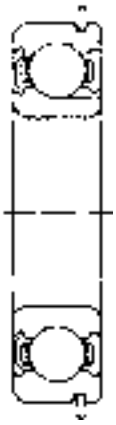

Single Shielded With Snap Ring ZNR

SERIES TMB2

Units: **INCHES**
Millimeters

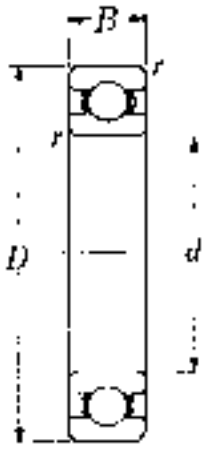

Open Type
TMB2

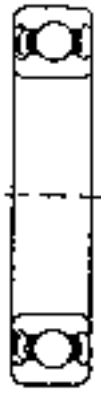

Single
Shielded
TMB2Z

Double
Shielded
TMB2ZZ

Double
Sealed
TMB2LLU
(Contact Type)

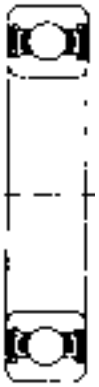

Double
Sealed
TMB2LLB
(Non-Contact Type)

SINGLE ROW RADIAL BALL BEARINGS

Bearing No.	Bore d	O.D. D	Width B	Fillet Radii r	Fillet Radii r_1	Basic Load Ratings (lbs) Dynamic C	Basic Load Ratings (lbs) Static C_0	Weight (lbs)
TMB200	.3937	1.1811	.3543	.024	.020	1,150	540	.071
	10	30	9	.6	.5			
TMB204	.7874	1.8504	.5512	.039	.020	2,890	1,500	.234
	20	47	14	1	.5			
TMB2/22	.8661	1.9685	.5512	.039	.020	2,900	1,530	.258
	22	50	14	1	.5			
TMB2/28	1.1024	2.2835	.6299	.039	.020	4,000	2,190	.377
	28	58	16	1	.5			
TMB206	1.1811	2.4409	.6299	.039	.020	4,400	2,540	.439
	30	62	16	1	.5			
TMB2/32	1.2598	2.5591	.6693	.039	.020	4,650	2,610	.498
	32	65	17	1	.5			
TMB207	1.3780	2.8346	.6693	.043	.020	5,750	3,450	.635
	35	72	17	1.1	.5			
TMB208	1.5748	3.1496	.7087	.043	.020	6,550	4,000	.807
	40	80	18	1.1	.5			
TMB209	1.7717	3.3465	.7480	.043	.020	7,350	4,600	.897
	45	85	19	1.1	.5			
TMB210	1.9685	3.5433	.7874	.043	.020	7,900	5,200	1.02
	50	90	20	1.1	.5			
TMB211	2.1654	3.9370	.8268	.059	.020	9,750	6,550	1.34
	55	100	21	1.5	.5			
TMB212	2.3622	4.3307	.8661	.059	.020	11,800	8,150	1.73
	60	110	22	1.5	.5			
TMB213	2.5591	4.7244	.9055	.059	.020	12,900	9,000	2.18
	65	120	23	1.5	.5			
TMB214	2.7559	4.9213	.9449	.059	.020	14,000	9,900	2.36
	70	125	24	1.5	.5			
TMB215	2.9528	5.1181	.9843	.059	.020	14,900	11,100	2.60
	75	130	25	1.5	.5			
TMB216	3.1496	5.5118	1.0236	.079	.020	16,500	11,900	3.09
	80	140	26	2.0	.5			
TMB217	3.3465	5.9055	1.1024	.079	.020	18,700	14,300	3.95
	85	150	28	2.0	.5			
TMB218	3.5433	6.2992	1.1811	.079	.020	21,600	16,100	4.74
	90	160	30	2.0	.5			
TMB219	3.7402	6.6929	1.2598	.079	.020	24,500	18,400	5.78
	95	170	32	2.0	.5			
TMB220	3.9370	7.0866	1.3386	.079	.020	27,500	20,900	6.92
	100	180	34	2.0	.5			

SINGLE ROW RADIAL BALL BEARINGS

Units: **INCHES**
Millimeters

SERIES TMB2

Snap Ring Groove Dimensions			Snap Ring Dimensions			Limiting Speed (RPM)			Bore Diameter No.
D_n (max)	a_n (max)	b_n (min)	E (max)	f	e	Grease	Oil	LLU	
1.109	**.081**	**.065**	**1.37**	**.042**	**.125**	**25,000**	**30,000**	**18,000**	**00**
28.17	2.06	1.65	34.7	1.07	3.17				
1.756	**.097**	**.065**	**2.07**	**.042**	**.156**	**16,000**	**18,000**	**10,000**	**04**
44.60	2.46	1.65	52.7	1.07	3.96				
1.874	**.097**	**.065**	**2.19**	**.042**	**.156**	**14,000**	**17,000**	**9,700**	**/22**
47.60	2.46	1.65	55.7	1.07	3.96				
2.189	**.097**	**.065**	**2.51**	**.042**	**.156**	**12,000**	**14,000**	**8,100**	**/28**
55.60	2.46	1.65	63.7	1.07	3.96				
2.347	**.129**	**.087**	**2.67**	**.065**	**.156**	**11,000**	**13,000**	**7,300**	**06**
59.61	3.28	2.21	67.7	1.65	3.96				
2.465	**.129**	**.087**	**2.78**	**.065**	**.156**	**11,000**	**12,000**	**7,100**	**/32**
62.61	3.28	2.21	70.7	1.65	3.96				
2.709	**.129**	**.087**	**3.09**	**.065**	**.188**	**9,800**	**11,000**	**6,300**	**07**
68.81	3.28	2.21	78.6	1.65	4.77				
3.024	**.129**	**.087**	**3.41**	**.065**	**.188**	**8,700**	**10,000**	**5,600**	**08**
76.81	3.28	2.21	86.6	1.65	4.77				
3.221	**.129**	**.087**	**3.61**	**.065**	**.188**	**7,800**	**9,200**	**5,200**	**09**
81.81	3.28	2.21	91.6	1.65	4.77				
3.417	**.129**	**.118**	**3.80**	**.095**	**.188**	**7,100**	**8,300**	**4,700**	**10**
86.79	3.28	3.00	96.5	2.41	4.77				
3.811	**.129**	**.118**	**4.19**	**.095**	**.188**	**6,400**	**7,600**	**4,300**	**11**
96.80	3.28	3.00	106.5	2.41	4.77				
4.205	**.129**	**.118**	**4.59**	**.095**	**.188**	**6,000**	**7,000**	**3,800**	**12**
106.81	3.28	3.00	116.6	2.41	4.77				
4.536	**.160**	**.134**	**5.11**	**.109**	**.281**	**5,500**	**6,500**	**3,600**	**13**
115.21	4.06	3.40	129.7	2.77	7.13				
4.733	**.160**	**.134**	**5.30**	**.109**	**.281**	**5,100**	**6,000**	**3,400**	**14**
120.22	4.06	3.40	134.7	2.77	7.13				
4.930	**.160**	**.134**	**5.50**	**.109**	**.281**	**4,800**	**5,600**	**3,200**	**15**
125.22	4.06	3.40	139.7	2.77	7.13				
5.324	**.193**	**.134**	**5.89**	**.109**	**.281**	**4,500**	**5,300**	**3,000**	**16**
135.23	4.90	3.40	149.7	2.77	7.13				
5.718	**.193**	**.134**	**6.29**	**.109**	**.281**	**4,200**	**5,000**	**2,800**	**17**
145.24	4.90	3.40	159.7	2.77	7.13				
6.111	**.193**	**.134**	**6.68**	**.109**	**.281**	**4,000**	**4,700**	**2,600**	**18**
155.22	4.90	3.40	169.7	2.77	7.13				
6.443	**.224**	**.150**	**7.20**	**.120**	**.375**	**3,700**	**4,400**	**2,500**	**19**
163.65	5.69	3.81	182.9	3.05	9.52				
6.837	**.224**	**.150**	**7.59**	**.120**	**.375**	**3,500**	**4,200**	**2,300**	**20**
173.66	5.69	3.81	192.9	3.05	9.52				

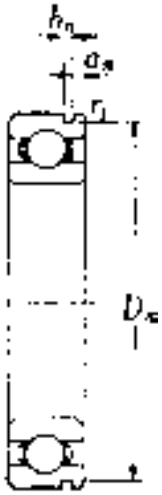

With Snap Ring Groove TMB2N

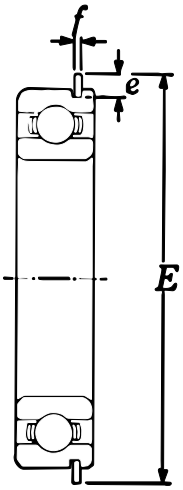

With Snap Ring TMB2NR

Single Shielded With Snap Ring TMB2ZNR

SERIES TMB2

Units: **INCHES**
Millimeters

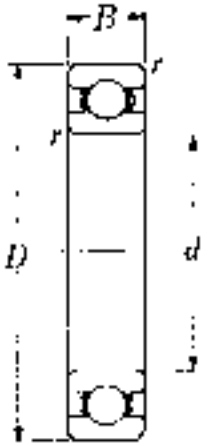

Open Type
TMB2

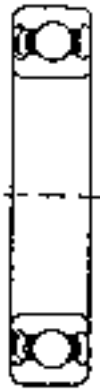

Single
Shielded
TMB2Z

Double
Shielded
TMB2ZZ

Double
Sealed
TMB2LLU
(Contact Type)

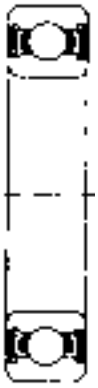

Double
Sealed
TMB2LLB
(Non-Contact Type)

SINGLE ROW RADIAL BALL BEARINGS

Bearing No.	Bore d	O.D. D	Width B	Fillet Radii r	Fillet Radii r_1	Basic Load Ratings (lbs) Dynamic C	Basic Load Ratings (lbs) Static C_0	Weight (lbs)
TMB221	**4.1339**	**7.4803**	**1.4173**	**.083**	**.020**	**29,900**	**23,500**	**8.16**
	105	190	36	2.1	.5			
TMB222	**4.3307**	**7.8740**	**1.4961**	**.083**	**.020**	**32,500**	**26,300**	**9.61**
	110	200	38	2.1	.5			
TMB224	**4.7244**	**8.4646**	**1.5748**	**.083**	**—**	**35,000**	**29,500**	**11.4**
	120	215	40	2.1	—			
TMB226	**5.1181**	**9.0551**	**1.5748**	**.118**	**—**	**37,500**	**33,000**	**12.8**
	130	230	40	3.0	—			
TMB228	**5.5118**	**9.8425**	**1.6535**	**.118**	**—**	**37,500**	**33,500**	**16.5**
	140	250	42	3.0	—			
TMB230	**5.9055**	**10.6299**	**1.7717**	**.118**	**—**	**39,500**	**37,500**	**20.7**
	150	270	45	—	—			
TMB232	**6.2992**	**11.4173**	**1.8898**	**.118**	**—**	**41,500**	**42,000**	**31.5**
	160	290	48	—	—			
TMB234	**6.6929**	**12.2047**	**2.0472**	**.197**	**—**	**47,500**	**50,000**	**38.6**
	170	310	52	4.0	—			
TMB236	**7.0866**	**12.5984**	**2.0472**	**.197**	**—**	**51,000**	**54,000**	**40.3**
	180	320	52	4.0	—			
TMB238	**7.4803**	**13.3858**	**2.1654**	**.197**	**—**	**57,500**	**63,500**	**50.7**
	190	340	55	4.0	—			
TMB240	**7.8740**	**14.1732**	**2.2835**	**.197**	**—**	**60,800**	**70,000**	**62.2**
	200	360	58	4.0	—			
TMB244	**8.6614**	**15.7480**	**2.5590**	**.197**	**—**	**67,000**	**81,500**	**66.6**
	220	400	65	4.0	—			

www.precise-rotation.ru

SINGLE ROW RADIAL BALL BEARINGS

Units: **INCHES**
Millimeters

SERIES TMB2

Snap Ring Groove Dimensions			Snap Ring Dimensions			Limiting Speed (RPM)			Bore Diameter No.
D_n (max)	a_n (max)	b_n (min)	E (max)	f (max)	e	Grease	Oil	LU, LLU	
7.230 183.64	**.224** 5.69	**.150** 3.81	**7.99** 202.9	**.120** 3.05	**.375** 9.52	**3,400**	**4,000**	**2,300**	**21**
7.624 193.65	**.224** 5.69	**.150** 3.81	**8.38** 212.9	**.120** 3.05	**.375** 9.52	**3,200**	**3,800**	**2,200**	**22**
—	—	—	—	—	—	**2,900**	**3,400**	**2,000**	**24**
—	—	—	—	—	—	**2,300**	**2,700**	—	**26**
—	—	—	—	—	—	**2,100**	**2,500**	—	**28**
—	—	—	—	—	—	**2,000**	**2,400**	—	**30**
—	—	—	—	—	—	**1,900**	**2,200**	—	**32**
—	—	—	—	—	—	**1,800**	**2,100**	—	**34**
—	—	—	—	—	—	**1,700**	**1,800**	—	**36**
—	—	—	—	—	—	**1,800**	**2,100**	—	**38**
—	—	—	—	—	—	**1,700**	**2,000**	—	**40**
—	—	—	—	—	—	**1,500**	**1,800**	—	**44**

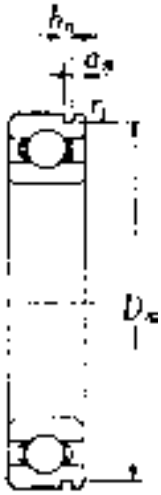

With Snap Ring Groove TMB2N

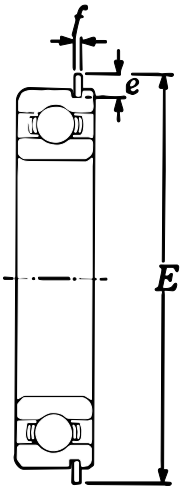

With Snap Ring

TMB2NR

Single Shielded With Snap Ring TMB2ZNR

SERIES TMB3

Units: **INCHES**
Millimeters

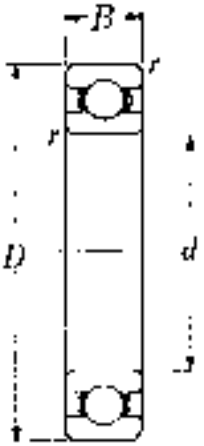

Open Type
TMB3

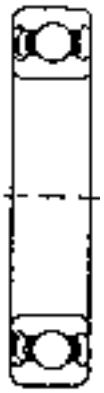

Single
Shielded
TMB3Z

Double
Shielded
TMB3ZZ

Double
Sealed
TMB3LLU
(Contact Type)

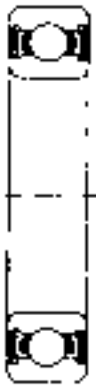

Double
Sealed
TMB3LLB
(Non-Contact Type)

SINGLE ROW RADIAL BALL BEARINGS

Bearing No.	Bore d	O.D. D	Width B	Fillet Radii r	Fillet Radii r_1	Basic Load Ratings (lbs) Dynamic C	Basic Load Ratings (lbs) Static C_0	Weight (lbs)
TMB300	.3937	1.3780	.4331	.024	.020	1,840	785	.117
	10	35	11	.6	.5			
TMB301	.4724	1.4567	.4724	.039	.020	2,180	940	.132
	12	37	12	1.0	.5			
TMB302	.5906	1.6535	.5118	.039	.020	2,570	1,220	.181
	15	42	13	1.0	.5			
TMB303	.6693	1.8504	.5512	.039	.020	3,050	1,470	.254
	17	47	14	1.0	.5			
TMB304	.7874	2.0472	.5906	.043	.020	3,600	1,770	.317
	20	52	15	1.1	.5			
TMB3/22	.8661	2.2047	.6299	—	.020	4,150	2,080	.388
	22	56	16	—	.5			
TMB305	.9843	2.4409	.6693	.043	.020	4,750	2,460	.511
	25	62	17	1.1	.5			
TMB3/28	1.1024	2.6772	.7087	.043	.020	6,000	3,150	.633
	28	68	18	1.1	.5			
TMB306	1.1811	2.8346	.7480	.043	.020	6,000	3,400	.763
	30	72	19	1.1	.5			
TMB3/32	1.2598	2.9528	.7874	.043	.020	6,700	3,800	.842
	32	75	20	1.1	.5			
TMB307	1.3780	3.1496	.8268	.059	.020	7,500	4,300	1.01
	35	80	21	1.5	.5			
TMB308	1.5748	3.5433	.9055	.059	.020	9,150	5,400	1.40
	40	90	23	1.5	.5			
TMB309	1.7717	3.9370	.9843	.059	.020	11,900	7,200	1.84
	45	100	25	1.5	.5			
TMB310	1.9685	4.3307	1.0630	.079	.020	13,900	8,600	2.36
	50	110	27	2.0	.5			
TMB311	2.1654	4.7244	1.1417	.079	.020	16,100	10,100	3.02
	55	120	29	2.0	.5			
TMB312	2.3622	5.1181	1.2205	.083	.020	18,400	11,700	3.75
	60	130	31	2.1	.5			
TMB313	2.5591	5.5118	1.2992	.089	.020	20,800	13,400	4.59
	65	140	33	2.1	.5			
TMB314	2.7559	5.9055	1.3780	.083	.020	23,400	15,300	5.56
	70	150	35	2.1	.5			
TMB315	2.9528	6.2992	1.4567	.083	.020	25,500	17,400	6.66
	75	160	37	2.1	.5			
TMB316	3.1496	6.6929	1.5354	.083	.020	27,600	19,500	7.91
	80	170	39	2.1	.5			
TMB317	3.3465	7.0866	1.6142	.118	.020	29,800	21,800	9.33
	85	180	41	3.0	.5			
TMB318	3.5433	7.4803	1.6929	.118	.020	32,000	24,100	10.8
	90	190	43	3.0	.5			
TMB319	3.7402	7.8740	1.7717	.118	.020	34,500	26,600	12.5
	95	200	45	3.0	.5			
TMB320	3.9370	8.4646	1.8504	.118	—	39,000	31,500	15.4
	100	215	47	3.0	—			
TMB321	4.1339	8.8583	1.9291	.118	—	41,500	34,500	17.7
	105	225	49	3.0	—			
TMB322	4.3307	9.4488	1.9685	.118	—	46,000	40,500	21.0
	110	240	50	3.0	—			
TMB324	4.7244	10.2362	2.1654	.118	—	46,500	41,500	27.3
	120	260	55	3.0	—			
TMB326	5.1181	11.0236	2.2835	.157	—	51,500	48,000	33.3
	130	280	58	4.0	—			
TMB328	5.5118	11.8110	2.4409	.157	—	57,000	55,500	40.8
	140	300	62	4.0	—			
TMB330	5.9055	12.5984	2.5591	.157	—	61,500	63,500	57.8
	150	320	65	4.0	—			
TMB332	6.2992	13.3858	2.6772	.157	—	62,500	64,500	63.9
	160	340	68	4.0	—			
TMB334	6.6929	14.1732	2.8346	.157	—	73,500	80,000	76.1
	170	360	72	4.0	—			
TMB336	7.0866	14.9606	2.9528	.157	—	79,500	91,500	93.5
	180	380	75	4.0	—			
TMB338	7.4803	15.7480	3.0709	.197	—	79,500	93,000	108
	190	400	78	5.0	—			
TMB340	7.8740	16.5354	3.1496	.197	—	92,000	113,000	122
	200	420	80	5.0	—			
TMB344	8.6614	18.1102	3.4650	.197	—	92,500	116,000	134
	220	460	88	5.0	—			

www.precise-rotation.ru

SINGLE ROW RADIAL BALL BEARINGS

Units: **INCHES**
Millimeters

SERIES TMB3

Snap Ring Groove Dimensions			Snap Ring Dimensions			Limiting Speed (RPM)			Bore Diameter No.
D_n (max)	a_n (max)	b_n (min)	E (max)	f (max)	e	Grease	Oil	LU, LLU	
1.306	.081	.065	1.56	.042	.125	23,000	27,000	16,000	00
33.17	2.06	1.65	39.7	1.07	3.18				
1.369	.081	.065	1.63	.042	.125	20,000	24,000	15,000	01
34.77	2.06	1.65	41.3	1.07	3.18				
1.565	.081	.065	1.82	.042	.125	17,000	21,000	12,000	02
39.75	2.06	1.65	46.3	1.07	3.18				
1.756	.097	.065	2.07	.042	.156	16,000	19,000	11,000	03
44.60	2.46	1.65	52.7	1.07	3.96				
1.958	.097	.065	2.28	.042	.156	14,000	17,000	10,000	04
49.73	2.46	1.65	57.9	1.07	3.96				
2.110	.097	.065	2.43	.042	.156	13,000	15,000	9,200	/22
53.59	2.46	1.65	61.7	1.07	3.96				
2.347	.129	.087	2.67	.065	.156	12,000	14,000	8,100	05
59.61	3.28	2.20	67.7	1.65	3.96				
2.552	.129	.087	2.94	.065	.188	11,000	13,000	7,400	/28
64.82	3.28	2.20	74.6	1.65	4.77				
2.709	.129	.087	3.09	.065	.188	10,000	12,000	6,600	06
68.81	3.28	2.20	78.6	1.65	4.77				
2.828	.129	.087	3.21	.065	.188	9,500	11,000	6,500	/32
71.83	3.28	2.20	81.6	1.65	4.77				
3.024	.129	.087	3.41	.065	.188	8,800	10,000	6,000	07
76.81	3.28	2.20	86.6	1.65	4.77				
3.417	.129	.118	3.80	.095	.188	7,800	9,200	5,300	08
86.79	3.28	3.00	96.5	2.41	4.77				
3.811	.129	.118	4.19	.095	.188	7,000	8,200	4,700	09
96.80	3.28	3.00	106.5	2.41	4.77				
4.205	.129	.118	4.59	.095	.188	6,400	7,500	4,200	10
106.81	3.28	3.00	116.6	2.41	4.77				
4.536	.160	.134	5.11	.109	.281	5,800	6,800	3,900	11
115.21	4.06	3.40	129.7	2.77	7.13				
4.930	.160	.134	5.50	.109	.281	5,400	6,300	3,600	12
125.22	4.06	3.40	139.7	2.77	7.13				
5.324	.193	.134	5.89	.109	.281	4,900	5,800	3,300	13
135.23	4.90	3.40	149.7	2.77	7.13				
5.718	.193	.134	6.29	.109	.281	4,600	5,400	3,100	14
145.24	4.90	3.40	159.7	2.77	7.13				
6.111	.193	.134	6.68	.109	.281	4,300	5,000	2,900	15
155.22	4.90	3.40	169.7	2.77	7.13				
6.443	.224	.150	7.20	.120	.375	4,000	4,700	2,700	16
163.65	5.69	3.80	182.9	3.05	9.52				
6.837	.224	.150	7.59	.120	.375	3,800	4,500	2,600	17
173.66	5.69	3.80	192.9	3.05	9.52				
7.230	.224	.150	7.99	.120	.375	3,600	4,200	2,400	18
183.64	5.69	3.80	202.9	3.05	9.52				
7.624	.224	.150	8.38	.120	.375	3,300	3,900	2,300	19
193.65	5.69	3.80	212.9	3.05	9.52				
—	—	—	—	—	—	3,200	3,700	2,200	20
—	—	—	—	—	—	3,000	3,600	2,100	21
—	—	—	—	—	—	2,900	3,400	1,900	22
—	—	—	—	—	—	2,600	3,100	—	24
—	—	—	—	—	—	2,400	2,800	—	26
—	—	—	—	—	—	2,200	2,600	—	28
—	—	—	—	—	—	2,100	2,400	—	30
—	—	—	—	—	—	1,900	2,300	—	32
—	—	—	—	—	—	1,800	2,100	—	34
—	—	—	—	—	—	1,700	2,000	—	36
—	—	—	—	—	—	1,600	1,900	—	38
—	—	—	—	—	—	1,500	1,800	—	40
—	—	—	—	—	—	1,400	1,600	—	44

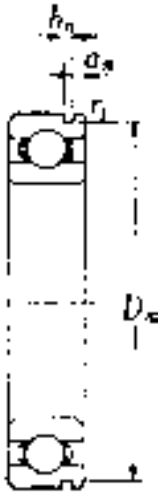

With Snap Ring Groove TMB3N

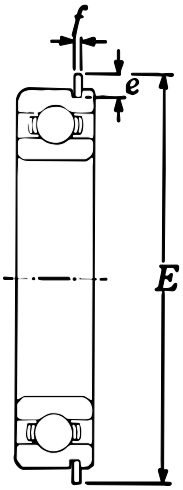

With Snap Ring TMB3NR

Single Shielded With Snap Ring TMB3ZNR

Notes

ANGULAR CONTACT BALL BEARING NUMBERING SYSTEM

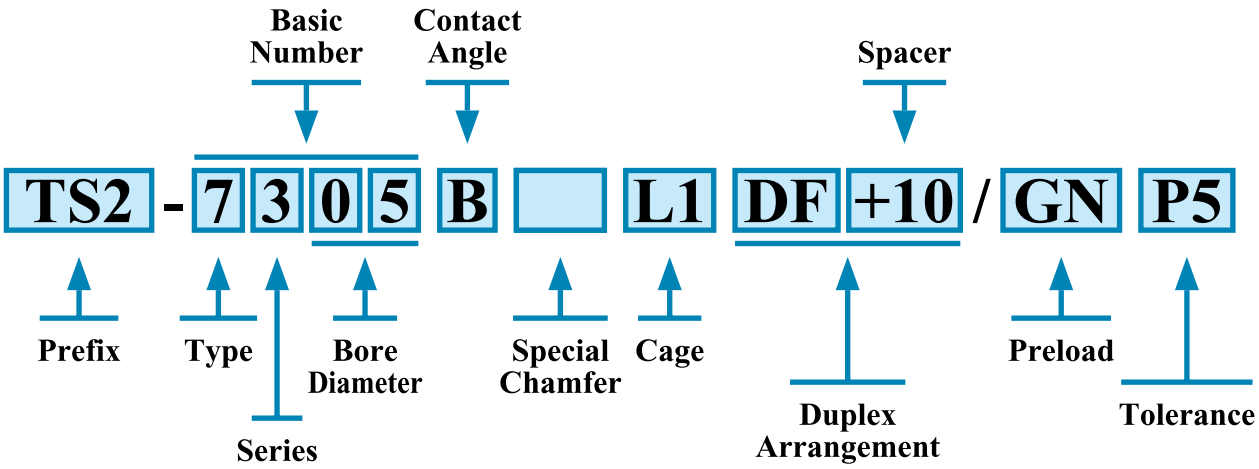

1. PREFIX

TS2:	Heat stabilization for up to 320°F (160°C)
TS3:	Heat stabilization for up to 390°F (200°C)
TS4:	Heat stabilization for up to 480°F (250°C)
5S:	Ceramic Rolling Elements

2. TYPE

32,33:	Double row angular contact ball bearings with filling slot
52,53:	Double row angular contact ball bearings without filling slot
70,72,73:	Angular contact ball bearings
BNT:	High speed angular contact ball bearings
HSB:	High speed angular contact ball bearings
SF:	Special single row angular contact ball bearings
DE & DF:	Special double row angular contact ball bearings

3. CONTACT ANGLE

No Symbol:	Contact Angle 30˚
B:	Contact angle 40˚
C:	Contact angle 15˚

4. CHAMFER

Xn:	Special chamfer, from 1 onward (X1, X2 . . .)

5. CAGE

No Symbol:	Standard cage
J:	Pressed steel cage
L1:	Machined brass cage
T1:	Phenolic cage
T2:	Plastic cage, nylon or teflon

6. DUPLEX ARRANGEMENT

DB:	Duplex pair, back to back mounting
DF:	Duplex pair, face to face mounting
DT:	Duplex pair, tandem mounting
G:	Single bearings, flush ground universal mount for DB, DF and DT arrangement
GD2:	Pair of universally mountable bearings
+A:	Spacer (A is nominal width of spacer in mm)

7. PRELOAD

GL:	Light preload
GN:	Normal preload
GM:	Medium preload
GH:	Heavy preload
Gn:	Special preload

8. TOLERANCE

P6:	ISO class 6 (equivalent to ABEC 3)
P5:	ISO class 5 (equivalent to ABEC 5)
P4:	ISO class 4 (equivalent to ABEC 7)
PXn:	Special Tolerance, from 1 onward (PX1, PX2 ...)

SERIES 72B

Units: **INCHES**
Millimeters

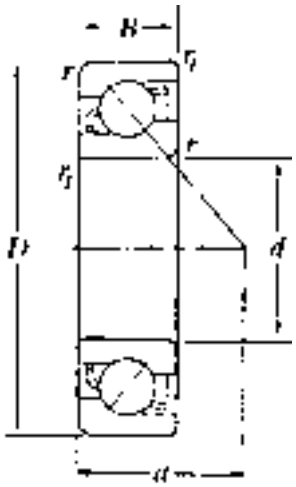

40°
Contact Angle
72B

SINGLE ROW ANGULAR CONTACT BALL BEARINGS

Bearing No.	Bore d	O.D. D	Width B	Fillet Radius r	Fillet Radius r1	Load Center a	Basic Load Ratings (lbs) Dynamic C	Basic Load Ratings (lbs) Static Co	Limiting Speeds (rpm) Grease	Limiting Speeds (rpm) Oil	Weight (lbs)	Limiting Speeds (rpm) Grease (Duplex: DB, DF, DT)	Limiting Speeds (rpm) Oil (Duplex: DB, DF, DT)
7200B	0.3937	1.1811	0.3543	0.024	0.012	0.51	1,120	565	24,000	32,000	0.064	19,000	26,000
	10	30	9	0.6	0.3	13							
7201B	0.4724	1.2598	0.3937	0.024	0.012	0.55	1,480	750	21,000	28,000	0.079	17,000	23,000
	12	32	10	0.6	0.3	14							
7202B	0.5906	1.3780	0.4331	0.024	0.012	0.63	1,880	980	18,000	25,000	0.101	15,000	20,000
	15	35	11	0.6	0.3	16							
7203B	0.6693	1.5748	0.4724	0.024	0.012	0.72	2,480	1,370	17,000	22,000	0.146	13,000	18,000
	17	40	12	0.6	0.3	18							
7204B	0.7874	1.8504	0.5512	0.039	0.024	0.85	2,990	1,730	15,000	20,000	0.225	12,000	16,000
	20	47	14	1.0	0.6	21.5							
7205B	0.9843	2.0472	0.5906	0.039	0.024	0.94	3,300	2,120	12,000	16,000	0.284	10,000	13,000
	25	52	15	1.0	0.6	24							
7206B	1.1811	2.4409	0.6299	0.039	0.024	1.08	4,600	3,050	11,000	14,000	0.434	8,600	11,000
	30	62	16	1.0	0.6	27.5							
7207B	1.3780	2.8346	0.6693	0.043	0.024	1.22	6,100	4,150	9,300	12,000	0.633	7,500	10,000
	35	72	17	1.1	0.6	31							
7208B	1.5748	3.1496	0.7087	0.043	0.024	1.34	7,200	5,150	8,300	11,000	0.827	6,700	8,900
	40	80	18	1.1	0.6	34							
7209B	1.7717	3.3465	0.7480	0.043	0.024	1.46	8,100	5,900	7,400	9,900	0.904	6,000	8,000
	45	85	19	1.1	0.6	37							
7210B	1.9685	3.5433	0.7874	0.043	0.024	1.56	8,400	6,450	6,700	9,000	1.03	5,500	7,300
	50	90	20	1.1	0.6	39.5							
7211B	2.1654	3.9370	0.8268	0.059	0.039	1.69	10,400	8,100	6,100	8,200	1.35	5,000	6,600
	55	100	21	1.5	1.0	43							
7212B	2.3622	4.3307	0.8661	0.059	0.039	1.87	12,600	10,000	5,700	7,600	1.72	4,600	6,100
	60	110	22	1.5	1.0	47.5							
7213B	2.5591	4.7244	0.9055	0.059	0.039	1.99	14,300	11,800	5,200	7,000	2.16	4,200	5,600
	65	120	23	1.5	1.0	50.5							
7214B	2.7559	4.9213	0.9449	0.059	0.039	2.09	15,500	13,000	4,900	6,500	2.45	3,900	5,200
	70	125	24	1.5	1.0	53							
7215B	2.9528	5.1181	0.9843	0.059	0.039	2.20	16,000	14,000	4,500	6,000	2.62	3,700	4,900
	75	130	25	1.5	1.0	56							
7216B	3.1496	5.5118	1.0236	0.079	0.039	2.32	18,100	15,600	4,300	5,700	3.13	3,400	4,600
	80	140	26	2	1.0	59							
7217B	3.3465	5.9055	1.1024	0.079	0.039	2.50	20,200	18,100	4,000	5,300	4.01	3,200	4,300
	85	150	28	2	1.0	63.5							
7218B	3.5433	6.2992	1.1811	0.098	0.039	2.66	24,000	21,100	3,800	5,000	4.89	3,100	4,100
	90	160	30	2.5	1.0	67.5							
7219B	3.7402	6.6929	1.2598	0.083	0.059	2.81	27,200	24,200	3,500	4,700	6.00	2,900	3,800
	95	170	32	2.1	1.5	71.5							
7220B	3.9370	7.0866	1.3386	0.083	0.059	2.99	29,300	25,700	3,400	4,500	7.19	2,700	3,600
	100	180	34	2.1	1.5	76							
7221B	4.1339	7.4803	1.4173	0.083	0.059	3.15	32,000	29,000	3,200	4,300	8.53	2,600	3,500
	105	190	36	2.1	1.5	80							
7222B	4.3307	7.8740	1.4961	0.083	0.059	3.31	34,500	32,500	3,000	4,000	10.0	2,500	3,300
	110	200	38	2.1	1.5	84							
7224B	4.7244	8.4646	1.5748	0.083	0.059	3.56	37,000	36,500	2,800	3,700	13.8	2,300	3,000
	120	215	40	2.1	1.5	90.5							
7226B	5.1181	9.0551	1.5748	0.118	0.059	3.76	40,000	40,500	2,500	3,400	15.8	2,100	2,700
	130	230	40	3	1.5	95.5							
7228B	5.5118	9.8425	1.6535	0.118	0.059	4.06	41,000	44,000	2,300	3,100	19.4	1,900	2,500
	140	250	42	3	1.5	103							
7230B	5.9055	10.6299	1.7717	0.118	0.059	4.37	47,000	53,000	2,200	2,900	24.3	1,800	2,400
	150	270	45	3	1.5	111							
7232B	6.2992	11.4173	1.8898	0.118	0.059	4.65	53,500	62,500	2,000	2,700	30.2	1,600	2,200
	160	290	48	3	1.5	118							
7234B	6.6929	12.2047	2.0472	0.157	0.059	5.00	60,000	73,500	1,900	2,500	37.5	1,500	2,100
	170	310	52	4	1.5	127							
7236B	7.0866	12.5984	2.0472	0.157	0.059	5.16	62,000	78,500	1,800	2,400	39.0	1,400	1,900
	180	320	52	4	1.5	131							
7238B	7.4803	13.3858	2.1654	0.157	0.059	5.47	61,500	79,500	1,700	2,200	47.0	1,400	1,800
	190	340	55	4	1.5	139							
7240B	7.8740	14.1732	2.2835	0.157	0.059	5.75	68,500	91,500	1,600	2,100	55.8	1,300	1,700
	200	360	58	4	1.5	146							

SINGLE ROW ANGULAR CONTACT BALL BEARINGS

Units: **INCHES**
Millimeters

SERIES 73B

Bearing No.	Bore *d*	O.D. *D*	Width *B*	Fillet Radius *r*	Fillet Radius *r1*	Load Center *a*	Basic Load Ratings (lbs) *Dynamic C*	Basic Load Ratings (lbs) *Static Co*	Limiting Speeds (rpm) Grease	Limiting Speeds (rpm) Oil	Weight (lbs)	Limiting Speeds (rpm) Grease (Duplex: DB, DF, DT)	Limiting Speeds (rpm) Oil (Duplex: DB, DF, DT)
7300B	0.3937	1.3780	0.4331	0.024	0.020	0.59	2,140	1,040	22,000	29,000	0.090	18,000	24,000
	10	35	11	0.6	0.3	15							
7301B	0.4724	1.4567	0.4724	0.039	0.024	0.6496	2,370	1,110	19,000	26,000	0.099	16,000	21,000
	12	37	12	1	0.6	16.5							
7302B	0.5906	1.6535	0.5118	0.039	0.024	0.7480	2,810	1,500	17,000	22,000	0.126	13,000	18,000
	15	42	13	1	0.6	19							
7303B	0.6693	1.8504	0.5512	0.039	0.024	0.81	3,350	1,800	15,000	20,000	0.240	12,000	16,000
	17	47	14	1	0.6	20.5							
7304B	0.7874	2.0472	0.5906	0.043	0.024	0.89	3,900	2,170	13,000	18,000	0.311	11,000	14,000
	20	52	15	1.1	0.6	22.5							
7305B	0.9843	2.4409	0.6693	0.043	0.024	1.06	5,500	3,300	11,000	15,000	0.516	9,100	12,000
	25	62	17	1.1	0.6	27							
7306B	1.1811	2.8346	0.7480	0.043	0.024	1.24	6,950	4,600	9,600	13,000	0.776	7,700	10,000
	30	72	19	1.1	0.6	31.5							
7307B	1.3780	3.1496	0.8268	0.059	0.039	1.36	8,250	5,450	8,400	11,000	1.03	6,800	9,000
	35	80	21	1.5	1	34.5							
7308B	1.5748	3.5433	0.9055	0.059	0.039	1.54	10,100	6,800	7,400	9,900	1.40	6,000	8,000
	40	90	23	1.5	1	39							
7309B	1.7717	3.9370	0.9843	0.059	0.039	1.69	13,100	9,050	6,600	8,900	1.88	5,400	7,200
	45	100	25	1.5	1	43							
7310B	1.9685	4.3307	1.0630	0.079	0.039	1.85	15,300	10,800	6,000	8,100	2.45	4,900	6,500
	50	110	27	2	1	47							
7311B	2.1654	4.7244	1.1417	0.079	0.039	2.05	17,700	12,800	5,500	7,300	3.13	4,500	5,900
	55	120	29	2	1	52							
7312B	2.3622	5.1181	1.2205	0.083	0.043	2.20	20,200	14,800	5,100	6,800	3.90	4,100	5,500
	60	130	31	2.1	1.1	56							
7313B	2.5591	5.5118	1.2992	0.083	0.043	2.34	22,900	17,000	4,700	6,300	4.72	3,800	5,100
	65	140	33	2.1	1.1	59.5							
7314B	2.7559	5.9055	1.3780	0.083	0.043	2.50	25,700	19,300	4,400	5,800	5.75	3,500	4,700
	70	150	35	2.1	1.1	63.5							
7315B	2.9528	6.2992	1.4567	0.083	0.043	2.68	28,000	21,900	4,100	5,400	6.90	3,300	4,400
	75	160	37	2.1	1.1	68							
7316B	3.1496	6.6929	1.5354	0.083	0.043	2.83	30,500	24,600	3,800	5,100	8.20	3,100	4,100
	80	170	39	2.1	1.1	72							
7317B	3.3465	7.0866	1.6142	0.118	0.043	2.99	32,500	27,400	3,600	4,800	9.77	2,900	3,900
	85	180	41	3	1.1	76							
7318B	3.5433	7.4803	1.6929	0.118	0.043	3.17	35,000	30,500	3,400	4,500	11.4	2,700	3,700
	90	190	43	3	1.1	80.5							
7319B	3.7402	7.8740	1.7717	0.118	0.043	3.33	37,500	33,500	3,200	4,200	13.2	2,600	3,400
	95	200	45	3	1.1	84.5							
7320B	3.9370	8.4646	1.8504	0.118	0.043	3.52	43,000	40,000	3,000	4,000	16.1	2,400	3,300
	100	215	47	3	1.1	89.5							
7321B	4.1339	8.8583	1.9291	0.118	0.043	3.68	45,500	43,500	2,900	3,800	18.4	2,300	3,100
	105	225	49	3	1.1	93.5							
7322B	4.3307	9.4488	1.9685	0.118	0.043	3.90	51,000	51,000	2,700	3,700	21.6	2,200	3,000
	110	240	50	3	1.1	99							
7324B	4.7244	10.2362	2.1654	0.157	0.043	4.21	50,500	52,000	2,500	3,300	32.4	2,000	2,700
	120	260	55	4	1.1	107							
7326B	5.1181	11.0236	2.2835	0.157	0.059	4.53	56,000	60,500	2,300	3,100	38.8	1,900	2,500
	130	280	58	4	1.5	115							
7328B	5.5118	11.8110	2.4409	0.157	0.059	4.84	62,000	69,500	2,100	2,800	47.4	1,700	2,300
	140	300	62	4	1.5	123							
7330B	5.9055	12.5984	2.5591	0.157	0.059	5.16	67,500	79,000	2,000	2,600	55.3	1,600	2,100
	150	320	65	4	1.5	131							
7332B	6.2992	13.3858	2.6772	0.157	0.059	5.47	71,000	87,000	1,800	2,400	65.7	1,500	2,000
	160	340	68	4	1.5	139							
7334B	6.6929	14.1732	2.8346	0.157	0.059	5.79	80,000	100,000	1,700	2,300	77.8	1,400	1,800
	170	360	72	4	1.5	147							
7336B	7.0866	14.9606	2.9528	0.157	0.059	6.10	84,000	110,000	1,600	2,100	90.2	1,300	1,700
	180	380	75	4	1.5	155							
7338B	7.4803	15.7480	3.0709	0.197	0.079	6.42	87,500	120,000	1,500	2,000	104	1,200	1,600
	190	400	78	5	2	163							
7340B	7.8740	16.5354	3.1496	0.197	0.079	6.69	92,000	125,000	1,400	1,900	117	1,200	1,500
	200	420	80	5	2	170							

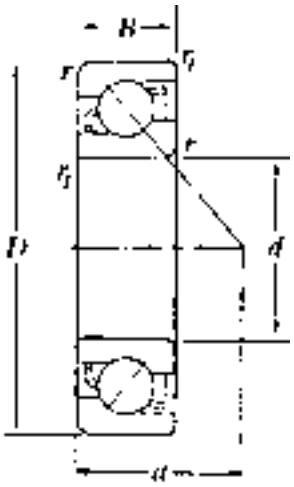

40°
Contact Angle
73B

SERIES 74B

Units: **INCHES**
Millimeters

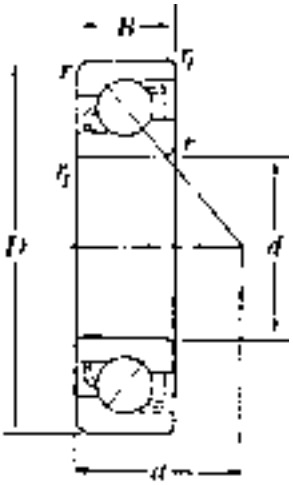

40°
Contact Angle
74B

SINGLE ROW ANGULAR CONTACT BALL BEARINGS

Bearing No.	Bore d	O.D. D	Width B	Fillet Radius r	Fillet Radius r_1	Load Center a	Basic Load Ratings (lbs) Dynamic C	Basic Load Ratings (lbs) Static C_o	Weight (lbs)
7404B	**.7874**	**2.8346**	**.7480**	**.043**	**.024**	**1.14**	**6,850**	**3,650**	**1.00**
	20	72	19	1.1	.6	29			
7406B	**1.1811**	**3.5433**	**.9843**	**.039**	**.024**	**1.46**	**9,100**	**5,450**	**1.83**
	30	90	25	1	.6	37			
7407B	**1.3780**	**3.9370**	**.9843**	**.039**	**.024**	**1.61**	**11,600**	**7,350**	**2.45**
	35	100	25	1	.6	41			
7408B	**1.5748**	**4.3307**	**1.0630**	**.059**	**.024**	**1.77**	**13,600**	**8,500**	**3.09**
	40	110	27	1.5	.6	45			
7409B	**1.7717**	**4.7244**	**1.1417**	**.059**	**.024**	**1.95**	**16,800**	**11,100**	**3.94**
	45	120	29	1.5	.6	49.5			
7410B	**1.9685**	**5.1181**	**1.2205**	**.083**	**.043**	**2.11**	**19,100**	**12,800**	**4.87**
	50	130	31	2.1	1.1	53.5			
7411B	**2.1654**	**5.5118**	**1.2992**	**.083**	**.043**	**2.26**	**20,300**	**13,900**	**6.02**
	55	140	33	2.1	1.1	57.5			
7412B	**2.3622**	**5.9055**	**1.3780**	**.083**	**.043**	**2.44**	**22,800**	**15,900**	**7.25**
	60	150	35	2.1	1.1	62			
7413B	**2.5591**	**6.2992**	**1.4567**	**.083**	**.043**	**2.60**	**26,500**	**19,800**	**8.77**
	65	160	37	2.1	1.1	66			
7414B	**2.7559**	**7.0866**	**1.6535**	**.098**	**.043**	**2.89**	**31,000**	**24,900**	**12.7**
	70	180	42	2.5	1.1	73.5			
7415B	**2.9528**	**7.4803**	**1.7717**	**.098**	**.043**	**3.09**	**33,500**	**27,000**	**15.0**
	75	190	45	2.5	1.1	78.5			
7416B	**3.1496**	**7.8740**	**1.8898**	**.098**	**.043**	**3.27**	**35,500**	**29,800**	**17.5**
	80	200	48	2.5	1.1	83			
7417B	**3.3465**	**8.2677**	**2.0472**	**.118**	**.039**	**3.46**	**39,500**	**33,500**	**20.4**
	85	210	52	3	1	88			
7418B	**3.5433**	**8.8583**	**2.1260**	**.118**	**.039**	**3.68**	**45,000**	**44,000**	**24.9**
	90	225	54	3	1	93.5			

www.precise-rotation.ru

SINGLE ROW ANGULAR CONTACT BALL BEARINGS

Units: **INCHES**
Millimeters

NTN
SERIES 70

Bearing No.	Bore *d*	O.D. *D*	Width *B*	Fillet Radius *r*	Fillet Radius *r1*	Load Center *a*	Basic Load Ratings (lbs) *Dynamic C*	Basic Load Ratings (lbs) *Static Co*	Limiting Speeds (rpm) Grease	Limiting Speeds (rpm) Oil	Weight (lbs)	Limiting Speeds (rpm) Grease *Duplex: DB, DF, DT*	Limiting Speeds (rpm) Oil *Duplex: DB, DF, DT*
7000	0.3937	1.0236	0.3150	0.012	0.006	0.35	1,040	465	29,000	39,000	0.049	23,000	31,000
	10	26	8	0.3	0.15	9.0							
7001	0.4724	1.1024	0.3150	0.012	0.006	0.39	1,140	555	26,000	35,000	0.053	21,000	28,000
	12	28	8	0.3	0.15	10.0							
7002	0.5906	1.2598	0.3543	0.012	0.006	0.45	1,300	705	23,000	31,000	0.077	18,000	24,000
	15	32	9	0.3	0.15	11.5							
7003	0.6693	1.3780	0.3937	0.012	0.006	0.49	1,610	860	21,000	28,000	0.099	17,000	22,000
	17	35	10	0.3	0.15	12.5							
7004	0.7874	1.6535	0.4724	0.024	0.012	0.59	2,180	1,260	19,000	25,000	0.174	15,000	20,000
	20	42	12	0.6	0.3	15.0							
7005	0.9843	1.8504	0.4724	0.024	0.012	0.65	2,420	1,540	16,000	21,000	0.201	12,000	17,000
	25	47	12	0.6	0.3	16.5							
7006	1.1811	2.1654	0.5118	0.039	0.024	0.75	3,100	2,130	13,000	18,000	0.293	11,000	14,000
	30	55	13	1	0.6	19.0							
7007	1.3780	2.4409	0.5512	0.039	0.024	0.83	3,950	2,830	12,000	16,000	0.403	9,400	13,000
	35	62	14	1	0.6	21.0							
7008	1.5748	2.6772	0.5906	0.039	0.024	0.91	4,200	3,300	10,000	14,000	0.481	8,300	11,000
	40	68	15	1	0.6	23.0							
7009	1.7717	2.9528	0.6299	0.039	0.024	1.00	5,000	3,950	9,500	13,000	0.613	7,500	10,000
	45	75	16	1	0.6	25.5							
7010	1.9685	3.1496	0.6299	0.039	0.024	1.06	5,300	4,500	8,600	11,000	0.677	6,800	9,100
	50	80	16	1	0.6	27.0							
7011	2.1654	3.5433	0.7087	0.043	0.024	1.18	7,000	5,900	7,900	11,000	0.924	6,300	8,400
	55	90	18	1.1	0.6	30.0							
7012	2.3622	3.7402	0.7087	0.043	0.024	1.24	7,150	6,300	7,200	9,600	0.990	5,800	7,700
	60	95	18	1.1	0.6	31.5							
7013	2.5591	3.9370	0.7087	0.043	0.024	1.30	7,600	7,050	6,700	9,000	1.05	5,400	7,100
	65	100	18	1.1	0.6	33.0							
7014	2.7559	4.3307	0.7874	0.043	0.024	1.42	9,600	8,850	6,200	8,300	1.58	5,000	6,600
	70	110	20	1.1	0.6	36.0							
7015	2.9528	4.5276	0.7874	0.043	0.024	1.48	9,800	9,400	5,800	7,800	1.67	4,600	6,200
	75	115	20	1.1	0.6	37.5							
7016	3.1496	4.9213	0.8661	0.043	0.024	1.59	12,000	11,400	5,500	7,300	2.16	4,400	5,800
	80	125	22	1.1	0.6	40.5							
7017	3.3465	5.1181	0.8661	0.043	0.024	1.65	12,300	12,000	5,100	6,900	2.43	4,100	5,500
	85	130	22	1.1	0.6	42.0							
7018	3.5433	5.5118	0.9449	0.059	0.039	1.77	14,700	14,200	4,900	6,500	3.09	3,900	5,200
	90	140	24	1.5	1	45.0							
7019	3.7402	5.7087	0.9449	0.059	0.039	1.83	15,000	15,000	4,600	6,100	3.26	3,700	4,900
	95	145	24	1.5	1	46.5							
7020	3.9370	5.9055	0.9449	0.059	0.039	1.89	15,400	15,900	4,400	5,800	3.35	3,500	4,600
	100	150	24	1.5	1	48.0							
7021	4.1339	6.2992	1.0236	0.079	0.039	2.03	18,000	18,400	4,100	5,500	4.21	3,300	4,400
	105	160	26	2	1	51.5							
7022	4.3307	6.6929	1.1024	0.079	0.039	2.15	20,600	20,900	3,900	5,300	5.29	3,100	4,200
	110	170	28	2	1	54.5							
7024	4.7244	7.0866	1.1024	0.079	0.039	2.26	21,100	22,200	3,600	4,800	5.73	2,900	3,800
	120	180	28	2	1	57.5							
7026	5.1181	7.8740	1.2992	0.079	0.039	2.52	26,400	28,200	3,300	4,400	8.64	2,600	3,500
	130	200	33	2	1	64.0							
7028	5.5118	8.2677	1.2992	0.079	0.039	2.64	26,900	29,800	3,100	4,100	9.17	2,400	3,300
	140	210	33	2	1	67.0							
7030	5.9055	8.8583	1.3780	0.083	0.043	2.81	31,000	34,500	2,800	3,800	10.7	2,300	3,000
	150	225	35	2.1	1.1	71.5							
7032	6.2992	9.4488	1.4961	0.083	0.043	3.03	35,000	39,500	2,700	3,600	13.0	2,100	2,800
	160	240	38	2.1	1.1	77.0							
7034	6.6929	10.2362	1.6535	0.083	0.043	3.27	42,000	48,000	2,500	3,300	17.4	2,000	2,600
	170	260	42	2.1	1.1	83.0							
7036	7.0866	11.0236	1.8110	0.083	0.043	3.52	49,000	59,500	2,300	3,100	22.0	1,900	2,500
	180	280	46	2.1	1.1	89.5							
7038	7.4803	11.4173	1.8110	0.083	0.043	3.64	50,500	63,000	2,200	2,900	23.6	1,800	2,300
	190	290	46	2.1	1.1	92.5							
7040	7.8740	12.2047	2.0079	0.083	0.043	3.90	56,500	73,000	2,100	2,800	30.4	1,700	2,200
	200	310	51	2.1	1.1	99.0							

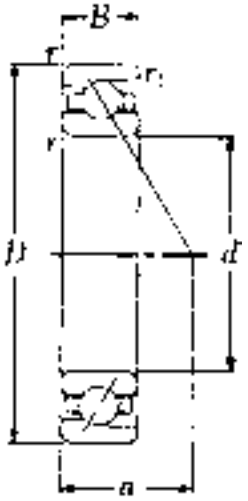

30°
Contact
Angle

NTN
SERIES 72

Units: **INCHES**
Millimeters

SINGLE ROW ANGULAR CONTACT BALL BEARINGS

Bearing No.	Bore *d*	O.D. *D*	Width *B*	Fillet Radius *r*	Fillet Radius *r1*	Load Center *a*	Basic Load Ratings (lbs) *Dynamic C*	Basic Load Ratings (lbs) *Static Co*	Limiting Speeds (rpm) Grease	Limiting Speeds (rpm) Oil	Weight (lbs)	Limiting Speeds (rpm) Grease *Duplex: DB, DF, DT*	Limiting Speeds (rpm) Oil *Duplex: DB, DF, DT*
7200	0.3937	1.1811	0.3543	0.024	0.012	0.41	1,220	615	28,000	37,000	0.064	22,000	30,000
	10	30	9	0.6	0.3	10.5							
7201	0.4724	1.2598	0.3937	0.024	0.012	0.45	1,600	810	25,000	33,000	0.077	20,000	26,000
	12	32	10	0.6	0.3	11.5							
7202	0.5906	1.3780	0.4331	0.024	0.012	0.49	2,040	1,060	22,000	29,000	0.101	17,000	23,000
	15	35	11	0.6	0.3	12.5							
7203	0.6693	1.5748	0.4724	0.024	0.012	0.57	2,690	1,490	19,000	26,000	0.141	15,000	21,000
	17	40	12	0.6	0.3	14.5							
7204	0.7874	1.8504	0.5512	0.039	0.024	0.67	3,250	1,890	17,000	23,000	0.220	14,000	18,000
	20	47	14	1	0.6	17							
7205	0.9843	2.0472	0.5906	0.039	0.024	0.75	3,650	2,320	14,000	19,000	0.276	11,000	15,000
	25	52	15	1	0.6	19							
7206	1.1811	2.4409	0.6299	0.039	0.024	0.85	5,050	3,350	12,000	16,000	0.425	9,800	13,000
	30	62	16	1	0.6	21.5							
7207	1.3780	2.8346	0.6693	0.043	0.024	0.94	6,700	4,500	11,000	14,000	0.619	8,600	11,000
	35	72	17	1.1	0.6	24							
7208	1.5748	3.1496	0.7087	0.043	0.024	1.04	7,950	5,650	9,600	13,000	0.783	7,700	10,000
	40	80	18	1.1	0.6	26.5							
7209	1.7717	3.3465	0.7480	0.043	0.024	1.12	8,900	6,450	8,700	12,000	0.891	6,900	9,200
	45	85	19	1.1	0.6	28.5							
7210	1.9685	3.5433	0.7874	0.043	0.024	1.18	9,300	7,050	7,900	10,000	1.01	6,300	8,300
	50	90	20	1.1	0.6	30							
7211	2.1654	3.9370	0.8268	0.059	0.039	1.30	11,500	8,900	7,100	9,500	1.32	5,700	7,600
	55	100	21	1.5	1	33							
7212	2.3622	4.3307	0.8661	0.059	0.039	1.42	13,900	11,000	6,600	8,800	1.69	5,300	7,000
	60	110	22	1.5	1	36							
7213	2.5591	4.7244	0.9055	0.059	0.039	1.50	15,800	13,000	6,100	8,100	2.12	4,900	6,500
	65	120	23	1.5	1	38							
7214	2.7559	4.9213	0.9449	0.059	0.039	1.57	17,200	14,300	5,700	7,600	2.40	4,500	6,000
	70	125	24	1.5	1	40							
7215	2.9528	5.1181	0.9843	0.059	0.039	1.67	17,800	15,400	5,300	7,100	2.58	4,200	5,600
	75	130	25	1.5	1	42.5							
7216	3.1496	5.5118	1.0236	0.079	0.039	1.77	20,000	17,100	5,000	6,600	3.06	3,900	5,300
	80	140	26	2	1	45							
7217	3.3465	5.9055	1.1024	0.079	0.039	1.89	22,400	19,900	4,700	6,200	3.92	3,700	5,000
	85	150	28	2	1	48							
7218	3.5433	6.2992	1.1811	0.079	0.039	2.01	26,500	23,200	4,400	5,900	4.81	3,500	4,700
	90	160	30	2	1	51							
7219	3.7402	6.6929	1.2598	0.083	0.043	2.15	30,000	26,500	4,100	5,500	5.89	3,300	4,400
	95	170	32	2.1	1.1	54.5							
7220	3.9370	7.0866	1.3386	0.083	0.043	2.26	32,500	28,200	3,900	5,200	7.05	3,100	4,200
	100	180	34	2.1	1.1	57.5							
7221	4.1339	7.4803	1.4173	0.083	0.043	2.38	35,000	32,000	3,700	5,000	8.36	3,000	4,000
	105	190	36	2.1	1.1	60.5							
7222	4.3307	7.8740	1.4961	0.083	0.043	2.52	38,000	35,500	3,500	4,700	9.81	2,800	3,800
	110	200	38	2.1	1.1	64							
7224	4.7244	8.4646	1.5748	0.083	0.043	2.70	41,000	40,000	3,200	4,300	13.8	2,600	3,400
	120	215	40	2.1	1.1	68.5							
7226	5.1181	9.0551	1.5748	0.118	0.043	2.83	44,000	44,500	3,000	4,000	15.8	2,400	3,100
	130	230	40	3	1.1	72							
7228	5.5118	9.8425	1.6535	0.118	0.043	3.05	45,500	48,500	2,700	3,600	19.4	2,200	2,900
	140	250	42	3	1.1	77.5							
7230	5.9055	10.6299	1.7717	0.118	0.043	3.27	52,000	58,000	2,500	3,400	24.3	2,000	2,700
	150	270	45	3	1.1	83							
7232	6.2992	11.4173	1.8898	0.118	0.043	3.50	59,000	69,000	2,400	3,200	30.2	1,900	2,500
	160	290	48	3	1.1	89							
7234	6.6929	12.2047	2.0472	0.157	0.059	3.76	66,000	80,500	2,200	3,000	37.5	1,800	2,400
	170	310	52	4	1.5	95.5							
7236	7.0866	12.5984	2.0472	0.157	0.059	3.86	68,500	86,500	2,100	2,800	39.0	1,700	2,200
	180	320	52	4	1.5	98							
7238	7.4803	13.3858	2.1654	0.157	0.059	4.09	68,000	87,500	2,000	2,600	47.0	1,600	2,100
	190	340	55	4	1.5	104							
7240	7.8740	14.1732	2.2835	0.157	0.059	4.33	76,000	101,000	1,900	2,500	55.8	1,500	2,000
	200	360	58	4	1.5	110							

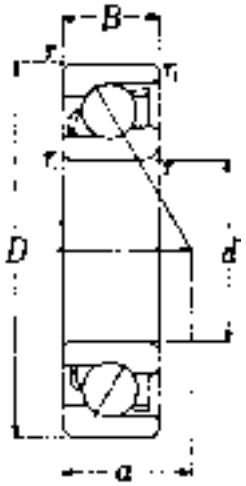

30°
Contact Angle
72

www.precise-rotation.ru

SINGLE ROW ANGULAR CONTACT BALL BEARINGS

Units: **INCHES**
Millimeters

NTN
SERIES 73

Bearing No.	Bore *d*	O.D. *D*	Width *B*	Fillet Radius *r*	Fillet Radius *r1*	Load Center *a*	Basic Load Ratings (lbs) *Dynamic C*	Basic Load Ratings (lbs) *Static Co*	Limiting Speeds (rpm) Grease	Limiting Speeds (rpm) Oil	Weight (lbs)	Limiting Speeds (rpm) Grease *Duplex: DB, DF, DT*	Limiting Speeds (rpm) Oil *Duplex: DB, DF, DT*
7300	0.3937	1.3780	0.4331	0.024	0.012	0.47	2,280	11,100	26,000	34,000	0.088	20,000	27,000
	10	35	11	0.6	0.3	12							
7301	0.4724	1.4567	0.4724	0.039	0.024	0.5118	2,510	1,180	23,000	30,000	0.097	18,000	24,000
	12	37	12	1	0.6	13							
7302	0.5906	1.6535	0.5118	0.039	0.024	0.5906	3,000	1,620	19,000	26,000	0.121	15,000	21,000
	15	42	13	1	0.6	15							
7303	0.6693	1.8504	0.5512	0.039	0.024	0.63	3,600	1,940	18,000	24,000	0.236	14,000	19,000
	17	47	14	1	0.6	16							
7304	0.7874	2.0472	0.5906	0.043	0.024	0.71	4,200	2,340	16,000	21,000	0.304	12,000	17,000
	20	52	15	1.1	0.6	18							
7305	0.9843	2.4409	0.6693	0.043	0.024	0.83	5,950	3,550	13,000	17,000	0.507	10,000	14,000
	25	62	17	1.1	0.6	21							
7306	1.1811	2.8346	0.7480	0.043	0.024	0.96	7,550	5,000	11,000	15,000	0.761	8,900	12,000
	30	72	19	1.1	0.6	24.5							
7307	1.3780	3.1496	0.8268	0.059	0.039	1.06	9,000	5,900	9,800	13,000	1.02	7,800	10,000
	35	80	21	1.5	1	27							
7308	1.5748	3.5433	0.9055	0.059	0.039	1.20	11,000	7,400	8,600	12,000	1.38	6,900	9,200
	40	90	23	1.5	1	30.5							
7309	1.7717	3.9370	0.9843	0.059	0.039	1.32	14,300	9,800	7,800	10,000	1.85	6,200	8,200
	45	100	25	1.5	1	33.5							
7310	1.9685	4.3307	1.0630	0.079	0.039	1.44	16,700	11,700	7,100	9,400	2.40	5,600	7,500
	50	110	27	2	1	36.5							
7311	2.1654	4.7244	1.1417	0.079	0.039	1.57	19,300	13,900	6,400	8,600	3.06	5,100	6,800
	55	120	29	2	1	40							
7312	2.3622	5.1181	1.2205	0.083	0.059	1.69	22,000	16,100	5,900	7,900	3.84	4,700	6,300
	60	130	31	2.1	1.5	43							
7313	2.5591	5.5118	1.2992	0.083	0.059	1.81	25,000	18,400	5,500	7,300	4.65	4,400	5,800
	65	140	33	2.1	1.5	46							
7314	2.7559	5.9055	1.3780	0.083	0.059	1.95	28,000	21,000	5,100	6,800	5.64	4,100	5,400
	70	150	35	2.1	1.5	49.5							
7315	2.9528	6.2992	1.4567	0.083	0.059	2.07	30,500	23,800	4,800	6,300	6.77	3,800	5,000
	75	160	37	2.1	1.5	52.5							
7316	3.1496	6.6929	1.5354	0.083	0.059	2.19	33,000	26,700	4,500	5,900	8.05	3,500	4,700
	80	170	39	2.1	1.5	55.5							
7317	3.3465	7.0866	1.6142	0.118	0.059	2.32	35,500	29,800	4,200	5,600	9.57	3,300	4,500
	85	180	41	3	1.5	59							
7318	3.5433	7.4803	1.6929	0.118	0.059	2.44	38,500	33,000	4,000	5,300	11.2	3,200	4,200
	90	190	43	3	1.5	62							
7319	3.7402	7.8740	1.7717	0.118	0.059	2.56	41,000	36,500	3,700	5,000	13.0	3,000	3,900
	95	200	45	3	1.5	65							
7320	3.9370	8.4646	1.8504	0.118	0.059	2.72	46,500	43,500	3,500	4,700	15.8	2,800	3,700
	100	215	47	3	1.5	69							
7321	4.1339	8.8583	1.9291	0.118	0.059	2.83	49,500	47,500	3,400	4,500	18.1	2,700	3,600
	105	225	49	3	1.5	72							
7322	4.3307	9.4488	1.9685	0.118	0.059	2.99	52,000	50,500	3,200	4,300	21.2	2,600	3,400
	110	240	50	3	1.5	76							
7324	4.7244	10.2362	2.1654	0.118	0.059	3.25	55,500	56,500	2,900	3,900	32.4	2,300	3,100
	120	260	55	3	1.5	82.5							
7326	5.1181	11.0236	2.2835	0.157	0.059	3.46	61,500	66,000	2,700	3,600	38.8	2,100	2,800
	130	280	58	4	1.5	88							
7328	5.5118	11.8110	2.4409	0.157	0.059	3.72	67,500	75,500	2,500	3,300	47.4	2,000	2,600
	140	300	62	4	1.5	94.5							
7330	5.9055	12.5984	2.5591	0.157	0.059	3.94	74,000	86,000	2,300	3,100	55.3	1,800	2,400
	150	320	65	4	1.5	100							
7332	6.2992	13.3858	2.6772	0.157	0.059	4.17	78,000	95,000	2,100	2,800	65.7	1,700	2,300
	160	340	68	4	1.5	106							
7334	6.6929	14.1732	2.8346	0.157	0.059	4.45	87,500	109,000	2,000	2,700	77.8	1,600	2,100
	170	360	72	4	1.5	113							
7336	7.0866	14.9606	2.9528	0.157	0.059	4.65	92,000	120,000	1,900	2,500	90.2	1,500	2,000
	180	380	75	4	1.5	118							
7338	7.4803	15.7480	3.0709	0.197	0.059	4.88	96,500	131,000	1,800	2,300	104	1,400	1,900
	190	400	78	5	1.5	124							
7340	7.8740	16.5354	3.1496	0.197	0.059	5.12	101,000	137,000	1,700	2,200	117	1,300	1,800
	200	420	80	5	1.5	130							

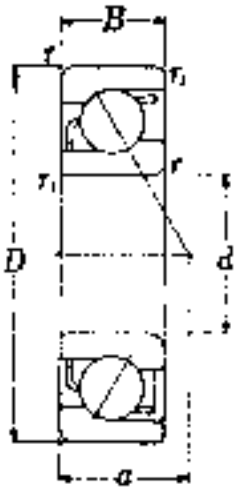

30°
Contact Angle
73

SERIES 70C

High Precision Grade

Suffix P5
• AFBMA RBEC 5 •
• ISO Class 5 •

Suffix P4
• AFBMA ABEC 7 •
• ISO Class 4 •

Suffix P2
• AFBMA ABEC 9 •
• ISO Class 2 •

Units: **INCHES**
Millimeters

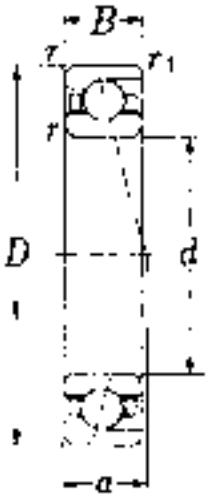

15°
Contact
Angle

SINGLE ROW ANGULAR CONTACT BALL BEARINGS

Bearing No.	Bore	O.D.	Width	Fillet Radius		Load Center	Basic Load Ratings (lbs)		Limiting Speeds (rpm)		Weight (lbs)	Limiting Speeds (rpm)	
							Dynamic	*Static*	Grease	Oil		Grease	Oil
	d	*D*	*B*	*r*	*r1*	*a*	*C*	*Co*				*Duplex: DB, DF, DT*	
7000C	0.3937	1.0236	0.3150	0.012	0.15	0.26	1,790	990	43,000	58,000	0.042	34,000	46,000
	10	26	8	0.3	0.06	6.5							
7001C	0.4724	1.1024	0.3150	0.012	0.15	0.26	1,220	595	39,000	52,000	0.046	31,000	41,000
	12	28	8	0.3	0.06	6.5							
7002C	0.5906	1.2598	0.3543	0.012	0.15	0.30	1,400	760	32,000	42,000	0.064	27,000	36,000
	15	32	9	0.3	0.06	7.5							
7003C	0.6693	1.3780	0.3937	0.012	0.15	0.33	1,740	925	31,000	41,000	0.084	24,000	33,000
	17	35	10	0.3	0.06	8.5							
7004C	0.7874	1.6535	0.4724	0.024	0.012	0.39	2,360	1,360	27,000	36,000	0.146	22,000	29,000
	20	42	12	0.6	0.3	10.0							
7005C	0.9843	1.8504	0.4724	0.024	0.012	0.43	2,630	1,670	23,000	31,000	0.132	18,000	24,000
	25	47	12	0.6	0.3	11.0							
7006C	1.1811	2.1654	0.5118	0.039	0.024	0.49	3,400	2,310	20,000	26,000	0.196	16,000	21,000
	30	55	13	1.0	0.6	12.5							
7007C	1.3780	2.4409	0.5512	0.039	0.024	0.53	4,300	3,050	17,000	23,000	0.287	14,000	18,000
	35	62	14	1.0	0.6	13.5							
7008C	1.5748	2.6772	0.5906	0.039	0.024	0.57	4,600	3,550	15,000	21,000	0.357	12,000	16,000
	40	68	15	1.0	0.6	14.5							
7009C	1.7717	2.9528	0.6299	0.039	0.024	0.63	5,500	4,350	14,000	19,000	0.461	11,000	15,000
	45	75	16	1.0	0.6	16.0							
7010C	1.9685	3.1496	0.6299	0.039	0.024	0.65	5,850	4,900	13,000	17,000	0.514	10,000	13,000
	50	80	16	1.0	0.6	16.5							
7011C	2.1654	3.5433	0.7087	0.043	0.024	0.73	7,650	6,450	12,000	15,000	0.712	9,200	12,000
	55	90	18	1.1	0.6	18.5							
7012C	2.3622	3.7402	0.7087	0.043	0.024	0.77	7,900	6,900	11,000	14,000	0.772	8,400	11,000
	60	95	18	1.1	0.6	19.5							
7013C	2.5591	3.9370	0.7087	0.043	0.024	0.79	8,350	7,700	9,900	13,000	0.840	7,800	10,000
	65	100	18	1.1	0.6	20.0							
7014C	2.7559	4.3307	0.7874	0.043	0.024	0.87	10,500	9,650	9,200	12,000	1.28	7,300	9,700
	70	110	20	1.1	0.6	22.0							
7015C	2.9528	4.5276	0.7874	0.043	0.024	0.89	10,800	10,300	8,600	11,000	1.33	6,800	9,000
	75	115	20	1.1	0.6	22.5							
7016C	3.1496	4.9213	0.8661	0.043	0.024	0.96	13,200	12,400	8,000	11,000	1.72	6,400	8,500
	80	125	22	1.1	0.6	24.5							
7017C	3.3465	5.1181	0.8661	0.043	0.024	1.00	13,500	13,200	7,600	10,000	1.94	6,000	8,000
	85	130	22	1.1	0.6	25.5							
7018C	3.5433	5.5118	0.9449	0.059	0.039	1.08	16,100	15,500	7,100	9,500	2.47	5,700	7,500
	90	140	24	1.5	1.0	27.5							
7019C	3.7402	5.7087	0.9449	0.059	0.039	1.10	16,500	16,500	6,800	9,000	2.60	5,400	7,100
	95	145	24	1.5	1.0	28.0							
7020C	3.9370	5.9055	0.9449	0.059	0.039	1.12	16,900	17,400	6,400	8,600	2.69	5,100	6,800
	100	150	24	1.5	1.0	28.5							
7021C	4.1339	6.2992	1.0236	0.079	0.039	1.22	19,800	20,100	6,100	8,100	3.37	4,800	6,400
	105	160	26	2.0	1.0	31.0							
7022C	4.3307	6.6929	1.1024	0.079	0.039	1.30	22,700	22,800	5,800	7,700	4.23	4,600	6,100
	110	170	28	2.0	1.0	33.0							
7024C	4.7244	7.0866	1.1024	0.079	0.039	1.34	23,200	24,300	5,300	7,100	4.74	4,200	5,600
	120	180	28	2.0	1.0	34.0							
7026C	5.1181	7.8740	1.2992	0.079	0.039	1.52	29,000	31,000	4,900	6,500	7.14	3,800	5,100
	130	200	33	2.0	1.0	38.5							
7028C	5.5118	8.2677	1.2992	0.079	0.039	1.57	29,700	32,500	4,500	6,000	7.58	3,600	4,800
	140	210	33	2.0	1.0	40.0							
7030C	5.9055	8.8583	1.3780	0.083	0.043	1.67	34,000	38,000	4,200	5,600	10.7	3,300	4,400
	150	225	35	2.1	1.1	42.5							
7032C	6.2992	9.4488	1.4961	0.083	0.043	1.81	38,500	43,500	3,900	5,200	13.0	3,100	4,100
	160	240	38	2.1	1.1	46.0							
7034C	6.6929	10.2362	1.6535	0.083	0.043	1.97	46,000	52,500	3,700	4,900	17.4	2,900	3,900
	170	260	42	2.1	1.1	50.0							
7036C	7.0866	11.0236	1.8110	0.083	0.043	2.13	54,000	65,500	3,400	4,600	22.0	2,700	3,600
	180	280	46	2.1	1.1	54.0							
7038C	7.4803	11.4173	1.8110	0.083	0.043	2.17	55,500	69,000	3,200	4,300	23.6	2,600	3,400
	190	290	46	2.1	1.1	55.0							
7040C	7.8740	12.2047	2.0079	0.083	0.043	2.34	62,000	80,000	3,100	4,100	30.4	2,400	3,200
	200	310	51	2.1	1.1	59.5							

SINGLE ROW ANGULAR CONTACT BALL BEARINGS

Units: **INCHES**
Millimeters

Bearing No.	Bore *d*	O.D. *D*	Width *B*	Fillet Radius *r*	Fillet Radius *r1*	Load Center *a*	Basic Load Ratings (lbs) *Dynamic C*	Basic Load Ratings (lbs) *Static Co*	Limiting Speeds (rpm) Grease	Limiting Speeds (rpm) Oil	Weight (lbs)	Limiting Speeds (rpm) Grease *Duplex: DB, DF, DT*	Limiting Speeds (rpm) Oil *Duplex: DB, DF, DT*
7200C	0.3937	1.1811	0.3543	0.024	0.012	0.28	1,220	595	41,000	55,000	0.037	32,000	43,000
	10	30	9	0.6	0.3	7.0							
7201C	0.4724	1.2598	0.3937	0.024	0.012	0.31	1,590	780	36,000	49,000	0.049	29,000	38,000
	12	32	10	0.6	0.3	8.0							
7202C	0.5906	1.3780	0.4331	0.024	0.012	0.35	2,020	1,010	32,000	42,000	0.068	25,000	33,000
	15	35	11	0.6	0.3	9.0							
7203C	0.6693	1.5748	0.4724	0.024	0.012	0.39	2,510	1,310	29,000	38,000	0.106	23,000	30,000
	17	40	12	0.6	0.3	10.0							
7204C	0.7874	1.8504	0.5512	0.039	0.024	0.45	3,300	1,840	25,000	34,000	0.181	20,000	27,000
	20	47	14	1.0	0.6	11.5							
7205C	0.9843	2.0472	0.5906	0.039	0.024	0.49	3,750	2,300	21,000	28,000	0.249	17,000	22,000
	25	52	15	1.0	0.6	12.5							
7206C	1.1811	2.4409	0.6299	0.039	0.024	0.55	5,200	3,300	18,000	24,000	0.395	14,000	19,000
	30	62	16	1.0	0.6	14.0							
7207C	1.3780	2.8346	0.6693	0.043	0.024	0.61	6,850	4,500	16,000	21,000	0.578	13,000	17,000
	35	72	17	1.1	0.6	15.5							
7208C	1.5748	3.1496	0.7087	0.043	0.024	0.67	8,150	5,650	14,000	19,000	0.752	11,000	15,000
	40	80	18	1.1	0.6	17.0							
7209C	1.7717	3.3465	0.7480	0.043	0.024	0.71	9,200	6,500	14,000	19,000	0.858	10,000	13,000
	45	85	19	1.1	0.6	18.0							
7210C	1.9685	3.5433	0.7874	0.043	0.024	0.77	9,650	7,150	12,000	15,000	0.963	9,100	12,000
	50	90	20	1.1	0.6	19.5							
7211C	2.1654	3.9370	0.8268	0.059	0.039	0.83	11,900	9,000	11,000	14,000	1.27	8,300	11,000
	55	100	21	1.5	1.0	21.0							
7212C	2.3622	4.3307	0.8661	0.059	0.039	0.89	14,400	11,100	9,700	13,000	1.66	7,700	10,000
	60	110	22	1.5	1.0	22.5							
7213C	2.5591	4.7244	0.9055	0.059	0.039	0.94	15,700	12,300	9,000	12,000	2.07	7,100	9,500
	65	120	23	1.5	1.0	24.0							
7214C	2.7559	4.9213	0.9449	0.059	0.039	0.98	17,100	13,500	8,300	11,000	2.34	6,600	8,800
	70	125	24	1.5	1.0	25.0							
7215C	2.9528	5.1181	0.9843	0.059	0.039	1.04	17,800	14,700	7,800	10,000	2.56	6,200	8,200
	75	130	25	1.5	1.0	26.5							
7216C	3.1496	5.5118	1.0236	0.079	0.039	1.08	20,900	17,400	7,300	9,700	3.04	5,800	7,700
	80	140	26	2	1.0	27.5							
7217C	3.3465	5.9055	1.1024	0.079	0.039	1.18	23,400	20,300	6,900	9,100	3.88	5,400	7,200
	85	150	28	2	1.0	30.0							
7218C	3.5433	6.2992	1.1811	0.079	0.039	1.24	27,600	23,500	6,500	8,600	4.76	5,100	6,800
	90	160	30	2	1.0	31.5							
7219C	3.7402	6.6929	1.2598	0.083	0.043	1.34	31,000	26,900	6,100	8,100	5.82	4,800	6,400
	95	170	32	2.1	1.1	34.0							
7220C	3.9370	7.0866	1.3386	0.083	0.043	1.42	33,500	28,500	5,800	7,700	6.99	4,600	6,100
	100	180	34	2.1	1.1	36.0							
7221C	4.1339	7.4803	1.4173	0.083	0.043	1.50	36,500	32,000	5,500	7,300	8.27	4,400	5,800
	105	190	36	2.1	1.1	38.0							
7222C	4.3307	7.8740	1.4961	0.083	0.043	1.57	39,500	36,000	5,200	6,900	9.72	4,100	5,500
	110	200	38	2.1	1.1	40.0							

NTN

SERIES 72C

High Precision Grade

Suffix P5
• AFBMA RBEC 5 •
• ISO Class 5 •

Suffix P4
• AFBMA ABEC 7 •
• ISO Class 4 •

Suffix P2
• AFBMA ABEC 9 •
• ISO Class 2 •

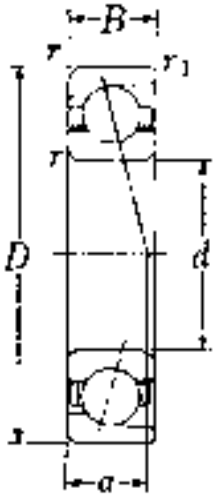

15°
Contact
Angle

SERIES 73C

High Precision Grade

Suffix P5
• AFBMA RBEC 5 •
• ISO Class 5 •

Suffix P4
• AFBMA ABEC 7 •
• ISO Class 4 •

Suffix P2
• AFBMA ABEC 9 •
• ISO Class 2 •

Units: **INCHES**
Millimeters

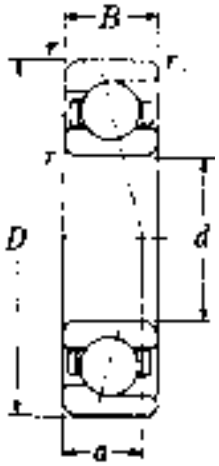

15°
Contact
Angle

SINGLE ROW ANGULAR CONTACT BALL BEARINGS

Bearing No.	Bore	O.D.	Width	Fillet Radius		Load Center	Basic Load Ratings (lbs)		Limiting Speeds (rpm)		Weight (lbs)	Limiting Speeds (rpm)	
							Dynamic	*Static*	Grease	Oil		Grease	Oil
	d	*D*	*B*	*r*	*r1*	*a*	*C*	*Co*				*Duplex: DB, DF, DT*	
7302C	0.5906	1.6535	0.5118	0.039	0.024	0.41	2,990	1,540	28,000	38,000	0.130	23,000	30,000
	15	42	13	1	0.6	10.5							
7303C	0.6693	1.8504	0.5512	0.039	0.024	0.45	3,550	1,860	26,000	35,000	0.190	21,000	27,000
	17	47	14	1	0.6	11.5							
7304C	0.7874	2.0472	0.5906	0.043	0.024	0.49	1,450	2,240	23,000	31,000	0.260	18,000	24,000
	20	52	15	1.1	0.6	12.5							
7305C	0.9843	2.4409	0.6693	0.043	0.024	0.57	5,950	3,450	19,000	26,000	0.445	15,000	20,000
	25	62	17	1.1	0.6	14.5							
7306C	1.1811	2.8346	0.7480	0.043	0.024	0.65	7,250	4,550	16,000	22,000	0.690	13,000	17,000
	30	72	19	1.1	0.6	16.5							
7307C	1.3780	3.1496	0.8268	0.059	0.039	0.71	9,050	5,800	14,000	19,000	0.939	11,000	15,000
	35	80	21	1.5	1.0	18.0							
7308C	1.5748	3.5433	0.9055	0.059	0.039	0.79	11,100	7,250	13,000	17,000	1.36	10,000	13,000
	40	90	23	1.5	1.0	20.0							
7309C	1.7717	3.9370	0.9843	0.059	0.039	0.89	14,400	9,700	11,000	15,000	1.82	9,000	12,000
	45	100	25	1.5	1.0	22.5							
7310C	1.9685	4.3307	1.0630	0.079	0.039	0.96	16,900	11,600	10,000	14,000	2.31	8,200	11,000
	50	110	27	2	1.0	24.5							
7311C	2.1654	4.7244	1.1417	0.079	0.039	1.04	19,500	13,600	94,000	13,000	2.93	7,500	9,900
	55	120	29	2	1.0	26.5							
7312C	2.3622	5.1181	1.2205	0.083	0.043	1.12	22,300	15,800	8,700	12,000	3.70	6,900	9,200
	60	130	31	2.1	1.1	28.5							
7313C	2.5591	5.5118	1.2992	0.083	0.043	1.18	25,200	18,100	8,100	11,000	4.52	6,400	8,500
	65	140	33	2.1	1.1	30.0							
7314C	2.7559	5.9055	1.3780	0.083	0.043	1.26	28,400	20,700	7,500	10,000	5.47	5,900	7,900
	70	150	35	2.1	1.1	32.0							
7315C	2.9528	6.2992	1.4567	0.083	0.043	1.34	31,000	23,400	7,000	9,300	6.79	5,500	7,400
	75	160	37	2.1	1.1	34.0							
7316C	3.1496	6.6929	1.5354	0.083	0.043	1.42	33,500	26,200	6,500	8,700	8.14	5,200	6,900
	80	170	39	2.1	1.1	36.0							
7317C	3.3465	7.0866	1.6142	0.118	0.043	1.52	36,000	29,300	6,200	8,200	9.44	4,900	6,500
	85	180	41	3.0	1.1	38.5							
7318C	3.5433	7.4803	1.6929	0.118	0.043	1.59	41,000	35,500	5,800	7,800	11.0	4,600	6,100
	90	190	43	3.0	1.1	40.5							
7319C	3.7402	7.8740	1.7717	0.118	0.043	1.67	44,000	39,000	5,500	7,300	12.9	4,300	5,800
	95	200	45	3.0	1.1	42.5							
7320C	3.9370	8.4646	1.8504	0.118	0.043	1.75	50,000	46,500	5,200	6,900	15.7	4,100	5,500
	100	215	47	3.0	1.1	44.5							
7321C	4.1339	8.8583	1.9291	0.118	0.043	1.83	53,000	50,500	5,500	7,300	17.9	3,900	5,200
	105	225	49	3.0	1.1	46.5							
7322C	4.3307	9.4488	1.9685	0.118	0.043	1.91	56,000	54,500	4,700	6,300	20.9	3,700	5,000
	110	240	50	3.0	1.1	48.5							

www.precise-rotation.ru

ANGULAR CONTACT BALL BEARINGS

Units: **INCHES**
Millimeters

Bearing No.	Bore	O.D.	Width	Fillet Radius		Load Center	Basic Load Ratings (lbs)		Limiting Speeds (rpm)		Weight (lbs)
							Dynamic	*Static*	Grease	Oil	
	d	*D*	*B*	*r*	*r1*	*a*	*C*	*Co*			
BNT000	0.3937	1.0236	0.3150	0.012	0.006	0.26	845	325	48,000	64,000	0.037
	10	26	8	0.3	0.15	6.5					
BNT001	0.4724	1.1024	0.3150	0.012	0.006	0.26	930	390	43,000	57,000	0.043
	12	28	8	0.3	0.15	6.5					
BNT002	0.5906	1.2598	0.3543	0.012	0.006	0.30	1,070	500	38,000	50,000	0.063
	15	32	9	0.3	0.15	7.5					
BNT003	0.6693	1.3780	0.3937	0.012	0.006	0.33	1,330	605	34,000	46,000	0.083
	17	35	10	0.3	0.15	8.5					
BNT004	0.7874	1.6535	0.4724	0.024	0.012	0.39	1,800	890	30,000	40,000	0.145
	20	42	12	0.6	0.3	10.0					
BNT005	0.9843	1.8504	0.4724	0.024	0.012	0.43	2,010	1,090	25,000	34,000	0.171
	25	47	12	0.6	0.3	11.0					
BNT006	1.1811	2.1654	0.5118	0.039	0.024	0.49	2,600	1,510	22,000	29,000	0.265
	30	55	13	1.0	0.6	12.5					
BNT007	1.3780	2.4409	0.5512	0.039	0.024	0.53	3,300	2,010	19,000	26,000	0.372
	35	62	14	1.0	0.6	13.5					
BNT008	1.5748	2.6772	0.5906	0.039	0.024	0.57	3,550	2,340	17,000	23,000	0.464
	40	68	15	1.0	0.6	14.5					
BNT009	1.7717	2.9528	0.6299	0.039	0.024	0.63	4,200	2,830	15,000	21,000	0.600
	45	75	16	1.0	0.6	16.0					
HSB010C	1.9685	3.1496	0.6299	0.039	0.024	0.65	4,680	2,565	14,000	19,000	0.564
	50	80	16	1.0	0.6	16.5					
HSB011C	2.1654	3.5433	0.7087	0.043	0.024	0.73	5,085	3,060	13,000	17,000	0.875
	55	90	18	1.1	0.6	18.5					
HSB012C	2.3622	3.7402	0.7087	0.043	0.024	0.77	5,332	3,375	12,000	16,000	0.937
	60	95	18	1.1	0.6	19.5					
HSB013C	2.5591	3.9370	0.7087	0.043	0.024	0.79	5,400	3,555	11,000	15,000	0.997
	65	100	18	1.1	0.6	20.0					
HSB014C	2.7559	4.3307	0.7874	0.043	0.024	0.87	6,615	4,477	10,000	14,000	1.41
	70	110	20	1.1	0.6	22.0					
HSB015C	2.9528	4.5276	0.7874	0.043	0.024	0.89	7,087	5,040	9,500	13,000	1.50
	75	115	20	1.1	0.6	22.5					
HSB016C	3.1496	4.9213	0.8661	0.043	0.024	0.96	8,100	5,782	8,900	12,000	2.02
	80	125	22	1.1	0.6	24.5					
HSB017C	3.3465	5.1181	0.8661	0.043	0.024	1.00	8,212	6,030	8,400	11,000	2.11
	85	130	22	1.1	0.6	25.5					
HSB018C	3.5433	5.5118	0.9449	0.059	0.039	1.08	9,450	7,087	7,900	11,000	2.76
	90	140	24	1.5	1.0	27.5					
HSB019C	3.7402	5.7087	0.9449	0.059	0.039	1.10	9,562	7,312	7,500	10,000	2.87
	95	145	24	1.5	1.0	28.0					
HSB020C	3.9370	5.9055	0.9449	0.059	0.039	1.12	9,900	7,875	7,100	9,500	3.00
	100	150	24	1.5	1.0	28.5					
HSB021C	4.1339	6.2992	1.0236	0.079	0.039	1.22	11,400	9,100	6,700	9,000	3.81
	105	160	26	2	1.0	31					
HSB022C	4.3307	6.6929	1.1024	0.079	0.039	1.30	14,100	11,100	6,400	8,600	4.70
	110	170	28	2	1.0	33					
HSB024C	4.7244	7.0866	1.1024	0.079	0.039	1.34	14,200	11,600	5,900	7,900	5.03
	120	180	28	2	1.0	34					
HSB026C	5.1181	7.8740	1.2992	0.079	0.039	1.52	20,300	16,000	5,400	7,200	7.50
	130	200	33	2	1.0	38.5					
HSB028C	5.5118	8.2677	1.2992	0.079	0.039	1.57	21,000	17,300	5,000	6,700	8.11
	140	210	33	2	1.0	40					
HSB030C	5.9055	8.8583	1.3780	0.083	0.043	1.67	21,700	18,700	4,600	6,200	9.83
	150	225	35	2.1	1.1	42.5					
HSB032C	6.2992	9.4488	1.4961	0.083	0.043	1.81	25,400	21,800	4,300	5,800	12.0
	160	240	38	2.1	1.1	46					
HSB034C	6.6929	10.2362	1.6535	0.083	0.043	1.97	29,000	25,000	4,100	5,400	16.3
	170	260	42	2.1	1.1	50					

SERIES BNT0 HSB0C

High Speed Service

Suffix P5
• AFBMA RBEC 5 •
• ISO Class 5 •

Suffix P4
• AFBMA ABEC 7 •
• ISO Class 4 •

Suffix P2
• AFBMA ABEC 9 •
• ISO Class 2 •

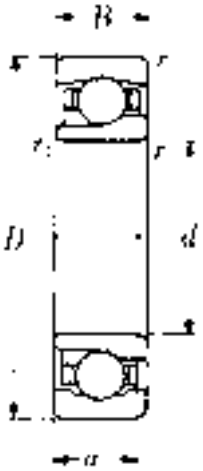

15° Contact Angle

NTN

SERIES 32 33

MAXIMUM TYPE

Units: **INCHES**
Millimeters

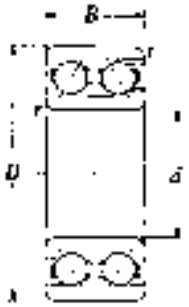

32

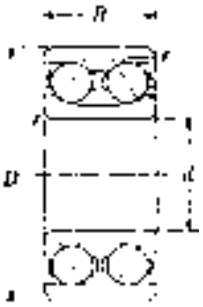

33

DOUBLE ROW ANGULAR CONTACT BALL BEARINGS

Bearing No.	Bore *d*	O.D. *D*	Width *B*	Fillet Radius *r*	Basic Load Ratings (lbs) *Dynamic C*	Basic Load Ratings (lbs) *Static Co*	Limiting Speeds (rpm) Grease	Limiting Speeds (rpm) Oil	Weight (lbs)
3200	0.3937 10	1.1811 30	0.5625 14.29	0.024 0.6	1,890	1,460	14,000	19,000	0.112
3201	0.4724 12	1.2598 32	0.6250 15.88	0.024 0.6	1,900	1,510	13,000	17,000	0.132
3202	0.5906 15	1.3780 35	0.6250 15.88	0.024 0.6	2,500	2,040	11,000	15,000	0.152
3203	0.6693 17	1.5748 40	0.6875 17.46	0.024 0.6	3,200	2,660	9,900	13,000	0.218
3204	0.7874 20	1.8504 47	0.8125 20.64	0.039 1	3,950	3,400	8,800	12,000	0.366
3205	0.9843 25	2.0472 52	0.8125 20.64	0.039 1	4,350	4,150	7,300	9,800	0.403
3206	1.1811 30	2.4409 62	0.9375 23.81	0.039 1	6,250	6,150	6,300	8,400	0.668
3207	1.3780 35	2.8346 72	1.0625 26.99	0.043 1.1	8,400	8,550	5,500	7,400	1.01
3208	1.5748 40	3.1496 80	1.1875 30.16	0.043 1.1	9,100	10,100	4,900	6,600	1.38
3209	1.7717 45	3.3465 85	1.1875 30.16	0.043 1.1	10,400	11,700	4,400	5,900	1.49
3210	1.9685 50	3.5433 90	1.1875 30.16	0.043 1.1	11,800	13,400	4,000	5,300	1.54
3211	2.1654 55	3.9370 100	1.3125 33.34	0.059 1.5	14,800	17,200	3,600	4,900	2.36
3212	2.3622 60	4.3307 110	1.4375 36.51	0.59 1.5	15,800	19,800	3,400	4,500	2.95
3213	2.5591 65	4.7244 120	1.5000 38.10	0.059 1.5	17,500	22,300	3,100	4,200	3.70
3214	2.7559 70	4.9213 125	1.5625 39.69	0.059 1.5	19,300	24,800	2,900	3,900	4.06
3215	2.9528 75	5.1181 130	1.6250 41.28	0.059 1.5	21,100	27,500	2,700	3,600	4.43
3216	3.1496 80	5.5118 140	1.7500 44.45	0.079 2	23,300	29,400	2,500	3,400	5.97
3217	3.3465 85	5.9055 150	1.9375 49.21	0.079 2	27,300	35,000	2,400	3,200	7.67
3218	3.5433 90	6.2992 160	2.0625 52.39	0.079 2	30,500	38,000	2,200	3,000	9.35
3219	3.7402 95	6.6929 170	2.1875 55.56	0.083 2.1	32,500	41,500	2,100	2,800	11.2
3220	3.9370 100	7.0866 180	2.3750 60.33	0.083 2.1	42,500	52,500	2,000	2,700	13.0
3302	0.5906 15	1.6535 42	0.7500 19.05	0.039 1	3,200	2,660	9,900	13,000	0.280
3303	0.6693 17	1.8504 47	0.8750 22.23	0.039 1	3,950	3,350	9,000	12,000	0.408
3304	0.7874 20	2.0472 52	0.8750 22.23	0.043 1.1	4,750	4,150	8,000	11,000	0.487
3305	0.9843 25	2.4409 62	1.0000 25.40	0.043 1.1	6,600	6,000	6,700	8,900	0.780
3306	1.1811 30	2.8346 72	1.1875 30.16	0.043 1.1	8,700	8,200	5,700	7,600	1.23
3307	1.3780 35	3.1496 80	1.3750 34.93	0.059 1.5	11,100	10,700	5,000	6,600	1.67
3308	1.5748 40	3.5433 90	1.4375 36.51	0.059 1.5	12,200	12,900	4,400	5,900	2.27
3309	1.7717 45	3.9370 100	1.5625 39.69	0.059 1.5	15,100	16,300	4,000	5,300	3.02
3310	1.9685 50	4.3307 110	1.7500 44.45	0.079 2	18,300	20,100	3,600	4,800	4.37
3311	2.1654 55	4.7244 120	1.9375 49.21	0.079 2	21,700	24,300	3,300	4,400	5.34
3312	2.3622 60	5.1181 130	2.1250 53.98	0.083 2.1	25,400	28,900	3,000	4,000	6.77
3313	2.5591 65	5.5118 140	2.3125 58.74	0.083 2.1	29,400	34,000	2,800	3,700	8.60
3314	2.7559 70	5.9055 150	2.5000 63.50	0.083 2.1	34,500	38,000	2,600	3,500	11.5
3315	2.9528 75	6.2992 160	2.6875 68.26	0.083 2.1	38,500	43,000	2,400	3,200	13.9

www.precise-rotation.ru

DOUBLE ROW ANGULAR CONTACT BALL BEARINGS

Units: **INCHES**
Millimeters

NTN

SERIES
52
53

Bearing No.	Bore *d*	O.D. *D*	Width *B*	Fillet Radius *r*	Basic Load Ratings (lbs) *Dynamic* *C*	Basic Load Ratings (lbs) *Static* *Co*	Limiting Speeds (rpm) Grease	Limiting Speeds (rpm) Oil	Weight (lbs)
5200	0.3937 10	1.1811 30	0.5630 14.3	0.024 0.6	1,560	855	14,000	19,000	0.108
5201	0.4724 12	1.2598 32	0.6260 15.9	0.024 0.6	2,050	1,140	13,000	17,000	0.126
5202	0.5906 15	1.3780 35	0.6260 15.9	0.024 0.6	2,260	1,360	11,000	15,000	0.141
5203	0.6693 17	1.5748 40	0.6890 17.5	0.024 0.6	2,870	1,770	9,900	13,000	0.212
5204	0.7874 20	1.8504 47	0.8110 20.6	0.039 1	4,300	2,710	8,800	12,000	0.337
5205	0.9843 25	2.0472 52	0.8110 20.6	0.039 1	4,650	3,200	7,300	9,800	0.386
5206	1.1811 30	2.4409 62	0.9370 23.8	0.039 1	6,450	4,600	6,300	8,400	0.631
5207	1.3780 35	2.8346 72	1.0630 27.0	0.043 1.1	8,500	6,250	5,500	7,400	0.961
5208	1.5748 40	3.1496 80	1.1890 30.2	0.043 1.1	9,600	7,250	4,900	6,600	1.30
5209	1.7717 45	3.3465 85	1.1890 30.2	0.043 1.1	10,800	8,300	4,400	5,900	1.41
5210	1.9685 50	3.5433 90	1.1890 30.2	0.043 1.1	11,500	9,400	4,000	5,300	1.52
5211	2.1654 55	3.9370 100	1.3110 33.3	0.059 1.5	14,200	11,900	3,600	4,900	2.17
5212	2.3622 60	4.3307 110	1.4370 36.5	0.059 1.5	16,100	13,100	3,400	4,500	2.80
5213	2.5591 65	4.7244 120	1.5000 38.1	0.059 1.5	18,700	16,300	3,100	4,200	3.46
5214	2.7559 70	4.9213 125	1.5630 39.7	0.059 1.5	20,400	17,900	2,900	3,900	3.97
5215	2.9528 75	5.1181 130	1.6260 41.3	0.059 1.5	20,300	18,100	2,700	3,600	4.19
5216	3.1496 80	5.5118 140	1.7480 44.4	0.079 2	23,800	21,400	2,500	3,400	5.27
5217	3.3465 85	5.9055 150	1.9370 49.2	0.079 2	25,100	23,900	2,400	3,200	6.75
5218	3.5433 90	6.2992 160	2.0630 52.4	0.079 2	31,500	29,000	2,200	3,000	8.22
5219	3.7402 95	6.6929 170	2.1890 55.6	0.083 2.1	35,500	33,000	2,100	2,800	10.7
5220	3.9370 100	7.0866 180	2.3740 60.3	0.083 2.1	40,000	37,500	2,000	2,700	13.1
5302	0.5906 15	1.6535 42	0.7480 19	0.039 1	3,850	2,260	9,900	13,000	0.291
5303	0.6693 17	1.8504 47	0.8740 22.2	0.039 1	2,870	1,770	9,000	12,000	0.212
5304	0.7874 20	2.0472 52	0.8740 22.2	0.043 1.1	4,650	2,850	8,000	11,000	0.478
5305	0.9843 25	2.4409 62	1.0000 25.4	0.043 1.1	6,850	4,600	6,700	8,900	0.798
5206	1.1811 30	2.8346 72	1.1890 30.2	0.043 1.1	8,900	6,200	5,700	7,600	1.22
5307	1.3780 35	3.1496 80	1.3740 34.9	0.059 1.5	11,100	7,850	5,000	6,600	1.69
5308	1.5748 40	3.5433 90	1.4370 36.5	0.059 1.5	13,600	9,850	4,400	5,900	2.23
5309	1.7717 45	3.9370 100	1.5630 39.7	0.059 1.5	16,300	12,100	4,000	5,300	2.95
5310	1.9685 50	4.3307 110	1.7480 44.4	0.079 2	19,200	14,500	3,600	4,800	3.99
5311	2.1654 55	4.7244 120	1.9370 49.2	0.079 2	23,900	18,500	3,300	4,400	5.11
5312	2.3622 60	5.1181 130	2.1260 54.0	0.083 2.1	27,300	21,400	3,000	4,000	6.72
5313	2.5591 65	5.5118 140	2.3110 58.7	0.083 2.1	31,000	24,600	2,800	3,700	8.73
5314	2.7559 70	5.9055 150	2.5000 63.5	0.083 2.1	35,000	28,000	2,600	3,500	10.4
5315	2.9528 75	6.2992 160	2.6890 68.3	0.083 2.1	38,000	31,500	2,400	3,200	12.5

52

53

Double Row

Sealed and Shielded

Units: **INCHES**
Millimeters

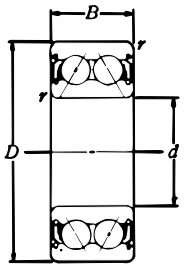

Type ZZ
with two shields

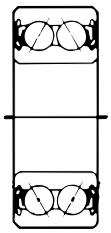

Type LLB
with two seals
(non-contact)

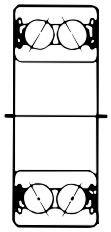

Type LLU
with two seals
(contact)

DOUBLE ROW ANGULAR CONTACT BALL BEARINGS

Bearing No.	Bore	O.D.	Width	Fillet Radius	Basic Load Ratings (lbs)		Limiting Speeds (rpm)			Weight (lbs)
					Dynamic	*Static*	Grease		Oil	
	d	*D*	*B*	*r*	*C*	*Co*	*ZZ,LLM*	*LLD*	*Z, LM*	
5200CZZ, LLB, LLU	**0.3937**	**1.1811**	**0.5630**	**0.024**	**1,560**	**855**	**17,000**	**15,000**	**22,000**	**.108**
	10	30	14.3	0.6						
5201CZZ, LLB, LLU	**0.4724**	**1.2598**	**0.6260**	**0.024**	**1,710**	**1,010**	**15,000**	**12,000**	**20,000**	**.126**
	12	32	15.9	0.6						
5202CZZ, LLB, LLU	**0.5906**	**1.3780**	**0.6260**	**0.024**	**1,840**	**1,180**	**13,000**	**12,000**	**17,000**	**.141**
	15	35	15.9	0.6						
5203CZZ, LLB, LLU	**0.6693**	**1.5748**	**0.6890**	**0.024**	**2,430**	**1,590**	**11,000**	**10,000**	**15,000**	**.212**
	17	40	17.5	0.6						
5204CZZ, LLB, LLU	**0.7874**	**1.8504**	**0.8110**	**0.039**	**3,550**	**2,280**	**10,000**	**9,000**	**13,000**	**.337**
	20	47	20.6	1						
5205CZZ, LLB, LLU	**0.9843**	**2.0472**	**0.8110**	**0.039**	**4,100**	**2,970**	**8,500**	**7,500**	**11,000**	**.386**
	25	52	20.6	1						
5206CZZ, LLB, LLU	**1.1811**	**2.4409**	**0.9370**	**0.039**	**5,850**	**4,400**	**7,100**	**6,300**	**9,500**	**.631**
	30	62	23.8	1						
5207CZZ , LLB, LLU	**1.3780**	**2.8346**	**1.0630**	**0.043**	**7,400**	**5,500**	**6,300**	**5,300**	**8,500**	**.961**
	35	72	27.0	1.1						
5208CZZ, LLB, LLU	**1.5748**	**3.1496**	**1.1890**	**0.043**	**9,050**	**7,150**	**5,600**	**4,800**	**7,100**	**1.30**
	40	80	30.2	1.1						
5303CZZ, LLB, LLU	**0.6693**	**1.8504**	**0.8740**	**0.039**	**4,250**	**2,670**	**10,000**	**9,500**	**13,000**	**.399**
	17	47	22.2	1						
5305CZZ, LLB, LLU	**0.9843**	**2.4409**	**1.0000**	**0.043**	**5,950**	**4,050**	**7,500**	**6,300**	**10,000**	**.798**
	25	62	25.4	1.1						
5306CZZ, LLB, LLU	**1.1811**	**2.8346**	**1.1890**	**0.043**	**7,400**	**5,450**	**6,300**	**5,300**	**8,500**	**1.22**
	30	72	30.2	1.1						
5307CZZ, LLB, LLU	**1.3780**	**3.1496**	**1.3740**	**0.059**	**11,100**	**7,850**	**5,600**	**4,800**	**7,500**	**1.69**
	35	80	34.9	1.5						
5308CZZ, LLB, LLU	**1.5748**	**3.5433**	**1.4370**	**0.059**	**12,400**	**9,000**	**5,300**	**4,500**	**6,700**	**2.23**
	40	90	36.5	1.5						

SELF ALIGNING BALL BEARING NUMBERING SYSTEM

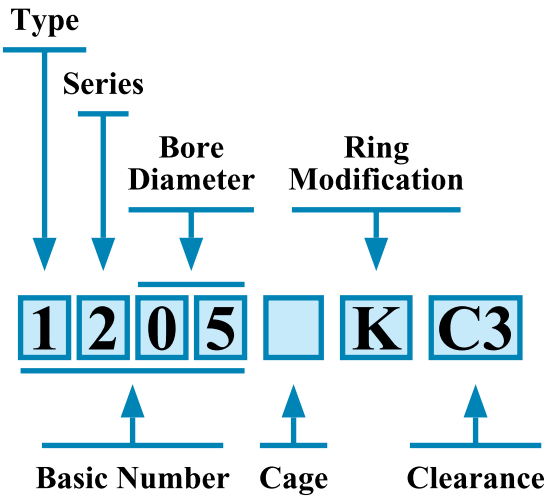

1. TYPE

1:	Standard for self-aligning ball bearings
2:	Standard for self-aligning ball bearings

2. CAGE

No Symbol:	Standard cage
J:	Pressed steel cage
T2:	Plastic cage, nylon or teflon
L1:	Machined brass cage

3. RING MODIFICATION

K:	1:12 tapered bore

4. INTERNAL CLEARANCE

C1:	Radial clearance less than C2
C2:	Radial clearance less than normal
C3:	Radial clearance greater than normal
C4:	Radial clearance greater than C3
C5:	Radial clearance greater than C4
CSXX:	Special radial clearance; XX is mean value in 0.001 mm units

SERIES
12
12K

Units: **INCHES**
Millimeters

SELF-ALIGNING BALL BEARINGS

Bearing No. 12	Bearing No. 12K	Bore d	O.D. D	Width B	Fillet Radius r	Basic Load Ratings (lbs) Dynamic C	Basic Load Ratings (lbs) Static C0	Weight (lbs) 12	Weight (lbs) 12K	Limiting Speeds (rpm) Grease	Limiting Speeds (rpm) Oil
1200	—	0.3937 10	1.1811 30	0.3543 9	0.024 0.6	1,230	268	.075	—	21,000	24,000
1201	—	0.4724 12	1.2598 32	0.3937 10	0.024 0.6	1,260	286	.088	—	18,000	22,000
1202	—	0.5906 15	1.3780 35	0.4331 11	0.024 0.6	1,680	395	.108	—	16,000	19,000
1203	—	0.6693 17	1.5748 40	0.4724 12	0.024 0.6	1,770	450	.161	—	14,000	17,000
1204	1204K	0.7874 20	1.8504 47	0.5512 14	0.039 1.0	2,230	585	.265	.26	13,000	15,000
1205	1205K	0.9843 25	2.0472 52	0.5906 15	0.039 1.0	2,720	740	.311	.304	11,000	13,000
1206	1206K	1.1811 30	2.4409 62	0.6299 16	0.039 1.0	3,500	1,050	.485	.476	9,200	11,000
1207	1207K	1.3780 35	2.8346 72	0.6693 17	0.043 1.1	3,550	1,150	.712	.699	8,000	9,400
1208	1208K	1.5748 40	3.1496 80	0.7087 18	0.043 1.1	4,350	1,470	.919	.906	7,100	8,400
1209	1209K	1.7717 45	3.3465 85	0.7480 19	0.043 1.1	4,900	1,650	1.03	1.01	6,400	7,500
1210	1210K	1.9685 50	3.5433 90	0.7874 20	0.043 1.1	5,100	1,820	1.16	1.14	5,800	6,800
1211	1211K	2.1654 55	3.9370 100	0.8268 21	0.059 1.5	6,000	2,250	1.55	1.53	5,300	6,200
1212	1212K	2.3622 60	4.3307 110	0.8661 22	0.059 1.5	6,800	2,590	1.98	1.95	4,900	5,800
1213	1213K	2.5591 65	4.7244 120	0.9055 23	0.059 1.5	6,950	2,820	2.54	2.49	4,500	5,300
1214	—	2.7559 70	4.9213 125	0.9449 24	0.059 1.5	7,800	3,100	2.78	—	4,200	4,900
1215	1215K	2.9528 75	5.1181 130	0.9843 25	0.059 1.5	8,750	3,550	3	2.95	3,900	4,600
1216	1216K	3.1496 80	5.5118 140	1.0236 26	0.079 2	8,950	3,800	3.68	3.62	3,700	4,300
1217	1217K	3.3465 85	5.9055 150	1.1024 28	0.079 2	11,000	4,650	4.56	4.5	3,500	4,100
1218	1218K	3.5433 90	6.2992 160	1.1811 30	0.079 2	12,800	5,300	5.56	5.47	3,300	3,800
1219	1219K	3.7402 95	6.6929 170	1.2598 32	0.083 2.1	14,300	6,100	6.83	6.72	3,100	3,600
1220	1220K	3.9370 100	7.0866 180	1.3386 34	0.083 2.1	15,500	6,700	8.16	8.02	2,900	3,400
1221	—	4.1339 105	7.4803 190	1.4173 36	0.083 2.1	16,700	7,300	9.63	—	2,800	3,300
1222	1222K	4.3307 110	7.8740 200	1.4961 38	0.083 2.1	18,100	7,950	11.4	11.2	2600	3100

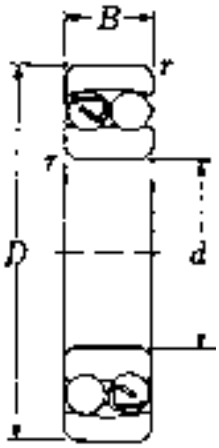

Cylindrical
Bore
12

Tapered Bore
12K
Taper 1:12

The d dimension for the tapered bore is measured from the side of the bearing with the smallest bore dimension.

SELF-ALIGNING BALL BEARINGS

Units: **INCHES**
Millimeters

NTN
SERIES
22
22K

Bearing No. 22	Bearing No. 22K	Bore d	O.D. D	Width B	Fillet Radius r	Basic Load Ratings (lbs) Dynamic C	Basic Load Ratings (lbs) Static C0	Weight (lbs) 22	Weight (lbs) 22K	Limiting Speeds (rpm) Grease	Limiting Speeds (rpm) Oil
2200	—	0.3937 10	1.1811 30	0.5512 14	0.024 0.6	1,640	360	0.104	—	19,000	23,000
2201	—	0.4724 12	1.2598 32	0.5512 14	0.024 0.6	1,710	390	0.117	—	17,000	20,000
2202	—	0.5906 15	1.3780 35	0.5512 14	0.024 0.6	1,730	415	0.132	—	15,000	18,000
2203	—	0.6693 17	1.5748 40	0.6299 16	0.024 0.6	2,200	545	0.194	—	13,000	16,000
2204	2204K	0.7874 20	1.8504 47	0.7087 18	0.039 1	2,830	745	0.309	0.300	12,000	14,000
2205	2205K	0.9843 25	2.0472 52	0.7087 18	0.039 1	2,760	775	0.359	0.348	10,000	12,000
2206	2206K	1.1811 30	2.4409 62	0.7874 20	0.039 1	3,400	1,020	0.573	0.560	8,600	10,000
2207	2207K	1.3780 35	2.8346 72	0.9055 23	0.043 1.1	4,850	1,480	0.888	0.873	7,500	8,800
2208	2208K	1.5748 40	3.1496 80	0.9055 23	0.043 1.1	5,000	1,650	1.11	1.09	6,700	7,900
2209	2209K	1.7717 45	3.3465 85	0.9055 23	0.043 1.1	5,200	1,830	1.20	1.18	6,000	7,100
2210	2210K	1.9685 50	3.5433 90	0.9055 23	0.043 1.1	5,200	1,900	1.30	1.27	5,500	6,400
2211	2211K	2.1654 55	3.9370 100	0.9843 25	0.059 1.5	5,950	2,220	1.79	1.75	5,000	5,800
2212	2212K	2.3622 60	4.3307 110	1.1024 28	0.059 1.5	7,650	2,840	2.40	2.36	4,600	5,400
2213	2213K	2.5591 65	4.7244 120	1.2205 31	0.059 1.5	9,750	3,700	3.22	3.15	4,200	5,300
2214	—	2.7559 70	4.9213 125	1.2205 31	0.059 1.5	9,850	3,850	3.35	—	3,900	4,600
2215	2215K	2.9528 75	5.1181 130	1.2205 31	0.059 1.5	9,950	4,000	3.57	3.48	3,700	4,300
2216	2216K	3.1496 80	5.5118 140	1.2992 33	.079 2.0	10,900	4,450	4.43	4.34	3,400	4,000
2217	2217K	3.3465 85	5.9055 150	1.4173 36	.079 2.0	13,100	5,300	5.56	5.42	3,200	3,800
2218	2218K	3.5433 90	6.2992 160	1.5748 40	.079 2.0	15,800	6,450	7.50	7.34	3,100	3,600
2219	2219K	3.7402 95	6.6929 170	1.6929 43	.083 2.1	18,700	7,750	9.04	8.82	2,900	3,400
2220	2220K	3.9370 100	7.0866 180	1.8110 46	.083 2.1	21,100	8,650	11.0	10.7	2,700	3,200
2221	—	4.1339 105	7.4803 190	1.9685 50	.083 2.1	24,400	10,100	13.4	—	2,600	3,100
2222	2222K	4.3307 110	7.8740 200	2.0866 53	.083 2.1	27,900	11,600	15.7	15.3	2,500	2,900

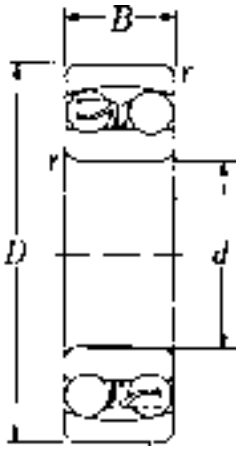

Cylindrical
Bore
22

Tapered Bore
22K
Taper 1:12

The d dimension for the tapered bore is measured from the side of the bearing with the smallest bore dimension.

www.precise-rotation.ru

SERIES
13
13K

Units: **INCHES**
Millimeters

SELF-ALIGNING BALL BEARINGS

Bearing No.		Bore	O.D.	Width		Fillet Radius	Basic Load Ratings (lbs)		Weight (lbs)		Limiting Speeds (rpm)	
							Dynamic	*Static*			Grease	Oil
13	*13K*	*d*	*D*	*B*	*B1**	*r*	*C*	*Co*	*13*	*13K*		
1300	—	0.3937	1.3780	0.4331	—	0.024	1,630	365	0.128	—	18,000	21,000
		10	35	11	—	0.6						
1301	—	0.4724	1.4567	0.4724	—	0.039	2,130	485	0.148	—	16,000	18,000
		12	37	12	—	1						
1302	—	0.5906	1.6535	0.5118	—	0.039	2,150	515	0.207	—	13,000	16,000
		15	42	13	—	1						
1303	—	0.6693	1.8504	0.5512	—	0.039	2,820	715	0.287	—	12,000	14,000
		17	47	14	—	1						
1304	1304K	0.7874	2.0472	0.5906	—	0.043	2,790	750	0.359	0.355	11,000	13,000
		20	52	15	—	1.1						
1305	1305K	0.9843	2.4409	0.6693	—	0.043	4,050	1,130	0.567	0.556	9,100	11,000
		25	62	17	—	1.1						
1306	1306K	1.1811	2.8346	0.7480	—	0.043	4,800	1,420	0.853	0.840	7,700	9,100
		30	72	19	—	1.1						
1307	1307K	1.3780	3.1496	0.8268	—	0.059	5,650	1,770	1.12	1.11	6,800	8,000
		35	80	21	—	1.5						
1308	1308K	1.5748	3.5433	0.9055	—	0.059	6,650	2,180	1.58	1.55	6,000	7,000
		40	90	23	—	1.5						
1309	1309K	1.7717	3.9370	0.9843	—	0.059	8,550	2,860	2.11	2.08	5,400	6,300
		45	100	25	—	1.5						
1310	1310K	1.9685	4.3307	1.0630	—	0.079	9,750	3,150	2.67	2.62	4,900	5,800
		50	110	27	—	2.0						
1311	1311K	2.1654	4.7244	1.1417	—	0.079	11,600	4,000	3.48	3.44	4,500	5,200
		55	120	29	—	2.0						
1312	1312K	2.3622	5.1181	1.2205	—	0.083	12,900	4,700	4.32	4.25	4,100	4,800
		60	130	31	—	2.1						
1313	1313K	2.5591	5.5118	1.2992	—	0.083	13,900	5,150	5.40	5.31	3,800	4,500
		65	140	33	—	2.1						
1314	—	2.7559	5.9055	1.3780	—	0.083	16,700	6,250	6.59	—	3,500	4,200
		70	150	35	—	2.1						
1315	1315K	2.9528	6.2992	1.4567	—	0.083	17,800	6,750	7.85	7.74	3,300	3,900
		75	160	37	—	2.1						
1316	1316K	3.1496	6.6929	1.5354	—	0.083	19,900	7,450	9.22	9.08	3,100	3,600
		80	170	39	—	2.1						
1317	1317K	3.3465	7.0866	1.6142	—	0.118	22,000	8,500	11.0	10.8	2,900	3,400
		85	180	41	—	3						
1318	1318K	3.5433	7.4803	1.6929	1.772	0.118	26,100	10,000	12.8	12.6	2,700	3,200
		90	190	43	45	3						
1319	1319K	3.7402	7.8740	1.7717	1.890	0.118	29,600	11,400	14.7	14.5	2,600	3,000
		95	200	45	48	3						
1320	1320K	3.9370	8.4646	1.8504	2.047	0.118	32,000	12,900	18.3	18.1	2,400	2,900
		100	215	47	52	3						
1321	—	4.1339	8.8583	1.9291	2.126	0.118	35,000	14,500	22.0	—	2,300	2,700
		105	225	49	54	3						
1322	1322K	4.3307	9.4488	1.9685	2.165	0.118	37,000	16,100	26.0	25.8	2,200	2,600
		110	240	50	55	3						

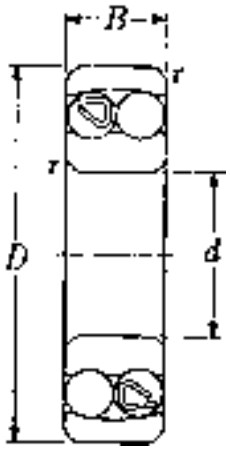

Cylindrical
Bore
13

Tapered Bore
13K
Taper 1:12

* B_1 is the combined width of the balls. Note that for bearings No. 1318(K) - 1322(K), the balls project beyond the ring face (B_1>B).

The d dimension for the tapered bore is measured from the side of the bearing with the smallest bore dimension.

SELF-ALIGNING BALL BEARINGS

Units: **INCHES**
Millimeters

NTN
SERIES 23 23K

Bearing No. 23	Bearing No. 23K	Bore d	O.D. D	Width B	Fillet Radius r	Basic Load Ratings (lbs) Dynamic C	Basic Load Ratings (lbs) Static C0	Weight (lbs) 22	Weight (lbs) 22K	Limiting Speeds (rpm) Grease	Limiting Speeds (rpm) Oil
2300	—	0.3937 10	1.3780 35	0.6693 17	0.024 0.6	2,270	485	0.183	—	17,000	20,000
2301	—	0.4724 12	1.4567 37	0.6693 17	0.039 1	2,640	610	0.201	—	15,000	17,000
2302	—	0.5906 15	1.6535 42	0.6693 17	0.039 1	2,700	650	0.251	—	13,000	15,000
2303	—	0.6693 17	1.8504 47	0.7480 19	0.039 1	3,250	800	0.348	—	11,000	14,000
2304	2304K	0.7874 20	2.0472 52	0.8268 21	0.043 1.1	4,050	1,060	0.461	0.452	10,000	12,000
2305	2305K	0.9843 25	2.4409 62	0.9449 24	0.043 1.1	5,500	1,480	0.739	0.721	8,500	10,000
2306	2306K	1.1811 30	2.8346 72	1.0630 27	0.043 1.1	7,050	1,970	1.10	1.08	7,200	8,500
2307	2307K	1.3780 35	3.1496 80	1.2205 31	0.059 1.5	8,850	2,530	1.49	1.45	6,300	7,400
2308	2308K	1.5748 40	3.5433 90	1.2992 33	0.059 1.5	10,100	3,050	2.04	1.99	5,600	6,600
2309	2309K	1.7717 45	3.9370 100	1.4173 36	0.059 1.5	12,200	3,750	2.71	2.65	5,000	5,900
2310	2310K	1.9685 50	4.3307 110	1.5748 40	0.079 2.0	14,500	4,550	3.62	3.53	4,600	5,400
2311	2311K	2.1654 55	4.7244 120	1.6929 43	0.079 2.0	16,900	5,400	4.63	4.52	4,200	4,900
2312	2312K	2.3622 60	5.1181 130	1.8110 46	0.083 2.1	19,600	6,350	5.73	5.58	3,800	4,500
2313	2313K	2.5591 65	5.5118 140	1.8898 48	0.083 2.1	21,600	7,300	7.12	6.94	3,600	4,200
2314	—	2.7559 70	5.9055 150	2.0079 51	0.083 2.1	24,600	8,450	8.60	—	3,300	3,900
2315	2315K	2.9528 75	6.2992 160	2.1654 55	0.083 2.1	27,700	9,650	10.4	10.2	3,100	3,600
2316	2316K	3.1496 80	6.6929 170	2.2835 58	0.083 2.1	28,800	10,200	13.4	13.1	2,900	3,400
2317	2317K	3.3465 85	7.0866 180	2.3622 60	0.118 3	31,500	11,500	15.5	15.2	2,700	3,200
2318	2318K	3.5433 90	7.4803 190	2.5197 64	0.118 3	34,000	12,900	18.6	18.2	2,600	3,000
2319	2319K	3.7402 95	7.8740 200	2.6378 67	0.118 3	37,000	14,500	21.6	21.1	2,400	2,800
2320	2320K	3.9370 100	8.4646 215	2.8740 73	0.118 3	43,000	17,800	27.3	26.7	2,300	2,700
2321	—	4.1339 105	8.8583 225	3.0315 77	0.118 3	46,000	19,500	31.5	—	2,200	2,600
2322	2322K	4.3307 110	9.4488 240	3.1496 80	0.118 3	48,500	21,300	38.1	37.3	2,100	2,400

The d dimension for the tapered bore is measured from the side of the bearing with the smallest bore dimension.

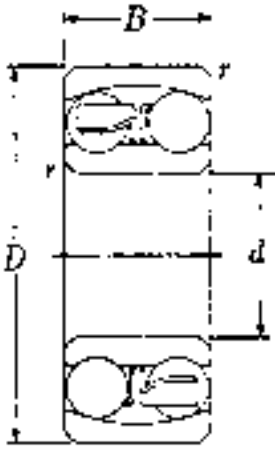

Cylindrical Bore 23

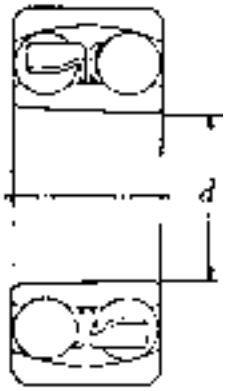

Tapered Bore 23K Taper 1:12

CYLINDRICAL ROLLER BEARING NUMBERING SYSTEM

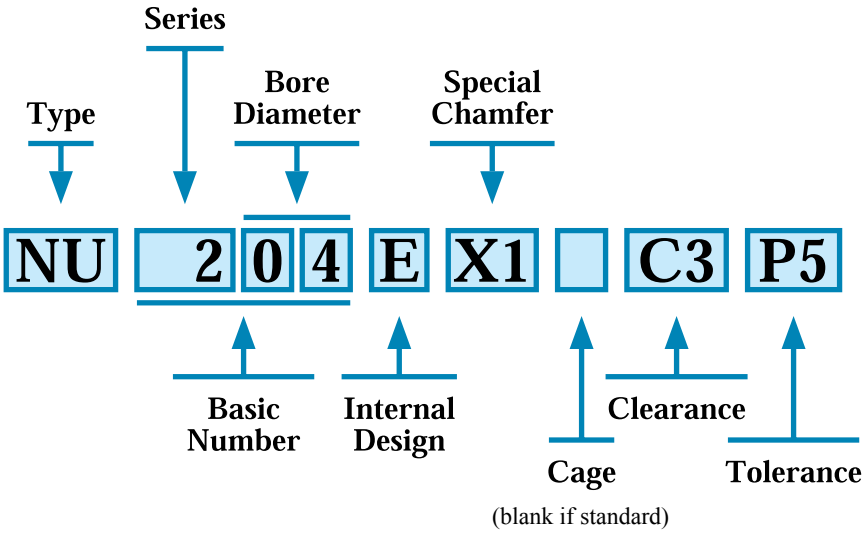

1. TYPE

N:	Straight outer ring with inner ring and roller assembly
NU:	Straight inner ring with outer ring and roller assembly
NF:	One lip outer ring with inner ring and roller assembly
NJ:	One lip inner ring with outer ring and roller assembly
NH:	NJ series bearing with HJ thrust collar (NJ+HJ=NH)
NN:	Double row precision cylindrical bearings
HJ:	Separate thrust collar
R, RN, RNU:	Special cylindrical roller bearings

2. SERIES

10:	Standard series cylindrical roller bearings
2:	Standard series cylindrical roller bearings
22:	Standard series cylindrical roller bearings
23:	Standard series cylindrical roller bearings
3:	Standard series cylindrical roller bearings
4:	Standard series cylindrical roller bearings

3. INTERNAL DESIGN

E:	High capacity cylindrical roller bearings

4. CHAMFER

Xn:	Special chamfer, from 1 onward (X1, X2 . . .)

5. CAGE

F1:	Machined steel cage
J:	Pressed steel cage
G1:	Machined brass cage
T2:	Nylon cage

6. INTERNAL CLEARANCE

C1:	Radial clearance less than C2
C2:	Radial clearance less than normal
No Suffix:	Normal Radial Clearance
C3:	Radial clearance greater than normal
C4:	Radial clearance greater than C3
C5:	Radial clearance greater than C4
CSXX:	Special radial clearance; XX is mean value in 0.001 mm units (µm)
NA:	Radial clearance of cylindrical roller bearings with non-interchangeable components

7. TOLERANCE

Normal:	ISO class 0
P6:	ISO class 6 (equivalent to RBEC 3)
P5:	ISO class 5 (equivalent to RBEC 5)
P4:	ISO class 4 (equivalent to RBEC 7)

www.precise-rotation.ru

CYLINDRICAL ROLLER BEARINGS

Units: **INCHES**
Millimeters

SERIES N10 NU10

Bearing No.	Bore d	O.D. D	Width B	Fillet Radii r	Fillet Radii r_1	Outer Ring I.D. D_r	Inner Ring O.D. d_r	Basic Load Ratings (lbs) Dynamic C	Basic Load Ratings (lbs) Static C_0	Weight (lbs) N10	Weight (lbs) NU10
1005	.9843	1.8504	.4724	.024	.012	1.6339	1.2008	3,400	3,150	.201	.203
	25	47	12	.6	.3	41.5	30.5				
1006	1.1811	2.1654	.5118	.039	.024	1.9094	1.4370	4,400	4,400	.291	.295
	30	55	13	1.0	.6	48.5	36.5				
1007	1.3780	2.4409	.5512	.039	.024	2.1654	1.6535	5,100	5,200	.386	.392
	35	62	14	1.0	.6	55.0	42.0				
1008	1.5748	2.6772	.5906	.039	.024	2.4016	1.8504	6,150	6,500	.481	.487
	40	68	15	1.0	.6	61.0	47.0				
1009	1.7717	2.9528	.6299	.039	.024	2.6575	2.0669	7,000	7,600	.608	.617
	45	75	16	1.0	.6	67.5	52.5				
1010	1.9685	3.1496	.6299	.039	.024	2.8543	2.2638	7,200	8,100	.653	.661
	50	80	16	1.0	.6	72.5	57.5				
1011	2.1654	3.5433	.7087	.059	.039	3.1693	2.5394	8,450	9,850	.959	.974
	55	90	18	1.5	1.0	80.5	64.5				
1012	2.3622	3.7402	.7087	.059	.039	3.3661	2.7362	9,000	10,900	1.03	1.04
	60	95	18	1.5	1.0	85.5	69.5				
1013	2.5591	3.9370	.7087	.059	.039	3.5630	2.9331	9,250	11,500	1.10	1.11
	65	100	18	1.5	1.0	90.5	74.5				
1014	2.7559	4.3307	.7874	.059	.039	3.9370	3.1496	13,100	15,800	1.52	1.54
	70	110	20	1.5	1.0	100.0	80.0				
1015	2.9528	4.5276	.7874	.059	.039	4.1339	3.3465	13,500	16,700	1.60	1.63
	75	115	20	1.5	1.0	105.0	85.0				
1016	3.1496	4.9213	.8661	.059	.039	4.4685	3.6024	16,300	20,400	2.13	2.16
	80	125	22	1.5	1.0	113.5	91.5				
1017	3.3465	5.1181	.8661	.059	.039	4.6654	3.7992	16,700	21,500	2.23	2.27
	85	130	22	1.5	1.0	118.5	96.5				
1018	3.5433	5.5118	.9449	.079	.059	5.0000	4.0551	19,800	25,700	2.91	2.95
	90	140	24	2.0	1.5	127.0	103.0				
1019	3.7402	5.7087	.9449	.079	.059	5.1969	4.2520	20,400	27,000	3.04	3.09
	95	145	24	2.0	1.5	132.0	108.0				
1020	3.9370	5.9055	.9449	.079	.059	5.3937	4.4488	20,900	28,300	3.15	3.20
	100	150	24	2.0	1.5	137.0	113.0				
1021	4.1339	6.2992	1.0236	.098	.059	5.7283	4.7047	23,700	32,000	3.99	4.06
	105	160	26	2.5	1.5	145.5	119.5				
1022	4.3307	6.6929	1.1024	.098	.059	6.1024	4.9213	29,500	39,000	4.96	5.03
	110	170	28	2.5	1.5	155.0	125.0				
1024	4.7244	7.0866	1.1024	.098	.059	6.4961	5.3150	31,000	43,000	5.29	5.38
	120	180	28	2.5	1.5	165.0	135.0				
1026	5.1181	7.8740	1.2992	.098	.059	7.1654	5.8268	38,500	53,500	8.00	8.14
	130	200	33	2.5	1.5	182.0	148.0				
1028	5.5118	8.2677	1.2992	.098	.059	7.5591	6.2205	39,500	56,000	8.51	8.64
	140	210	33	2.5	1.5	192.0	158.0				
1030	5.9055	8.8583	1.3780	.098	.079	8.0906	6.6732	45,500	66,000	10.4	10.5
	150	225	35	2.5	2.0	205.5	169.5				
1032	6.2992	9.4488	1.4961	.098	.079	8.6614	7.0866	53,500	77,000	12.8	13.0
	160	240	38	2.5	2.0	220.0	180.0				
1034	6.6929	10.2362	1.6535	.098	.098	9.3307	7.5984	62,500	90,000	17.1	17.4
	170	260	42	2.5	2.5	237.0	193.0				
1036	7.0866	11.0236	1.8110	.098	.098	10.0394	8.0709	77,000	110,000	22.3	22.7
	180	280	46	2.5	2.5	255.0	205.0				
1038	7.4803	11.4173	1.8110	.098	.098	10.4331	8.4646	79,000	115,000	23.1	23.6
	190	290	46	2.5	2.5	265.0	215.0				
1040	7.8740	12.2047	2.0079	.098	.098	11.0630	9.0157	87,500	131,000	30.2	30.6
	200	310	51	2.5	2.5	281.0	229.0				
1044	8.6614	13.3858	2.2047	.118	.118	12.2047	9.8425	113,000	168,000	39.5\	40.1
	220	340	56	3.0	3.0	310.0	250.0				
1048	9.4488	14.1732	2.2047	.118	.118	12.9921	10.6299	119,000	184,000	42.5\	43.2
	240	360	56	3.0	3.0	330.0	270.0				
1052	10.2362	15.7480	2.5591	.157	.157	14.3307	11.6535	145,000	224,000	63.3	64.2
	260	400	65	4.0	4.0	364.0	296.0				
1056	11.0236	16.5354	2.5591	.157	.157	15.1181	12.4409	148,000	235,000	67.0	68.1
	280	420	65	4.0	4.0	384.0	316.0				
1060	11.8110	18.1102	2.9134	.157	.157	16.5354	13.3858	192,000	300,000	94.6	96.1
	300	460	74	4.0	4.0	420.0	340.0				
1064	12.5984	18.8976	2.9134	.157	.157	17.3228	14.1732	197,000	315,000	99.9	101
	320	480	74	4.0	4.0	440.0	360.0				

These figures may vary slightly according to cage type and type of bearing.

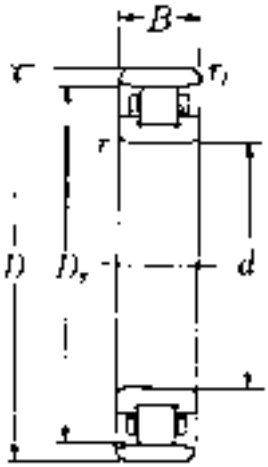

N10

NU10

SERIES
NF2 • N2
NJ2 • NU2

Units: **INCHES**
Millimeters

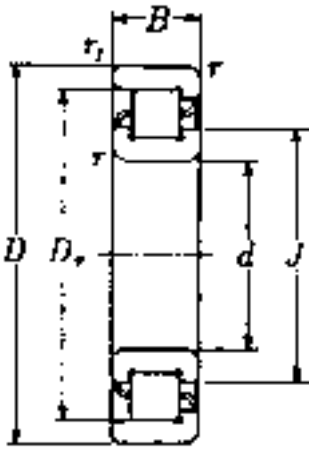

NF2

N2

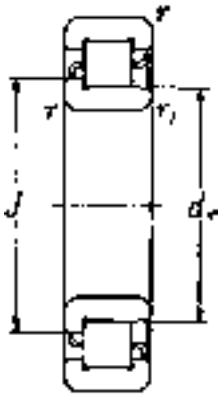

NJ2

CYLINDRICAL ROLLER BEARINGS

Bearing No.	Bore d	O.D. D	Width B	Fillet Radii r	Fillet Radii r_1	Outer Ring I.D. D_r	Inner Ring O.D. d_r	Shoulder Height J
204	**.7874**	**1.8504**	**.5512**	**.039**	**.024**	**1.5748**	**1.0630**	**1.181**
	20	47	14	1.0	.6	40.0	27.0	30.0
205	**.9843**	**2.0472**	**.5906**	**.039**	**.024**	**1.7717**	**1.2598**	**1.378**
	25	52	15	1.0	.6	45.0	32.0	35.0
206	**1.1811**	**2.4409**	**.6299**	**.039**	**.024**	**2.1063**	**1.5157**	**1.646**
	30	62	16	1.0	.6	53.5	38.5	41.8
207	**1.3780**	**2.8346**	**.6693**	**.059**	**.024**	**2.4331**	**1.7244**	**1.874**
	35	72	17	1.5	.6	61.8	43.8	47.6
208	**1.5748**	**3.1496**	**.7087**	**.059**	**.059**	**2.7559**	**1.9685**	**2.134**
	40	80	18	1.5	1.5	70.0	50.0	54.2
209	**1.7717**	**3.3465**	**.7480**	**.059**	**.059**	**2.9528**	**2.1654**	**2.323**
	45	85	19	1.5	1.5	75.0	55.0	59.0
210	**1.9685**	**3.5433**	**.7874**	**.059**	**.059**	**3.1654**	**2.3780**	**2.543**
	50	90	20	1.5	1.5	80.4	60.4	64.6
211	**2.1654**	**3.9370**	**.8268**	**.079**	**.059**	**3.4843**	**2.6181**	**2.787**
	55	100	21	2.0	1.5	88.5	66.5	70.8
212	**2.3622**	**4.3307**	**.8661**	**.079**	**.079**	**3.8386**	**2.8937**	**3.087**
	60	110	22	2.0	2.0	97.5	73.5	78.4
213	**2.5591**	**4.7244**	**.9055**	**.079**	**.079**	**4.1575**	**3.1339**	**3.339**
	65	120	23	2.0	2.0	105.6	79.6	84.8
214	**2.7559**	**4.9213**	**.9449**	**.079**	**.079**	**4.3504**	**3.3268**	**3.528**
	70	125	24	2.0	2.0	110.5	84.5	89.6
215	**2.9528**	**5.1181**	**.9843**	**.079**	**.079**	**4.5866**	**3.4843**	**3.701**
	75	130	25	2.0	2.0	116.5	88.5	94.0
216	**3.1496**	**5.5118**	**1.0236**	**.098**	**.098**	**4.9331**	**3.7520**	**3.984**
	80	140	26	2.5	2.5	125.3	95.3	101.2
217	**3.3465**	**5.9055**	**1.1024**	**.098**	**.098**	**5.2677**	**4.0079**	**4.260**
	85	150	28	2.5	2.5	133.8	101.8	108.2
218	**3.5433**	**6.2992**	**1.1811**	**.098**	**.098**	**5.6299**	**4.2126**	**4.496**
	90	160	30	2.5	2.5	143.0	107.0	114.2
219	**3.7402**	**6.6929**	**1.2598**	**.098**	**.098**	**5.9646**	**4.4685**	**4.764**
	95	170	32	2.5	2.5	151.5	113.5	121.0
220	**3.9370**	**7.0866**	**1.3386**	**.098**	**.098**	**6.2992**	**4.7244**	**5.039**
	100	180	34	2.5	2.5	160.0	120.0	128.0
221	**4.1339**	**7.4803**	**1.4173**	**.098**	**.098**	**6.6457**	**4.9921**	**5.315**
	105	190	36	2.5	2.5	168.8	126.8	135.0
222	**4.3307**	**7.8740**	**1.4961**	**.098**	**.098**	**7.0276**	**5.2165**	**5.571**
	110	200	38	2.5	2.5	178.5	132.5	141.5
224	**4.7244**	**8.4646**	**1.5748**	**.098**	**.098**	**7.5394**	**5.6496**	**6.024**
	120	215	40	2.5	2.5	191.5	143.5	153.0
226	**5.1181**	**9.0551**	**1.5748**	**.118**	**.118**	**8.0315**	**6.1417**	**6.516**
	130	230	40	3.0	3.0	204.0	156.0	165.5
228	**5.5118**	**9.8425**	**1.6535**	**.118**	**.118**	**8.7008**	**6.6535**	**7.067**
	140	250	42	3.0	3.0	221.0	169.0	179.5
230	**5.9055**	**10.6299**	**1.7717**	**.118**	**.118**	**9.3701**	**7.1654**	**7.598**
	150	270	45	3.0	3.0	238.0	182.0	193.0
232	**6.2992**	**11.4173**	**1.8898**	**.118**	**.118**	**10.0394**	**7.6772**	**8.150**
	160	290	48	3.0	3.0	255.0	195.0	207.0
234	**6.6929**	**12.2047**	**2.0472**	**.157**	**.157**	**10.7087**	**8.1890**	**8.681**
	170	310	52	4.0	4.0	272.0	208.0	220.5
236	**7.0866**	**12.5984**	**2.0472**	**.157**	**.157**	**11.1024**	**8.5827**	**9.075**
	180	320	52	4.0	4.0	282.0	218.0	230.5
238	**7.4803**	**13.3858**	**2.1654**	**.157**	**.157**	**11.7717**	**9.0945**	**9.626**
	190	340	55	4.0	4.0	299.0	231.0	244.5
240	**7.8740**	**14.1732**	**2.2835**	**.157**	**.157**	**12.4409**	**9.6063**	**10.157**
	200	360	58	4.0	4.0	316.0	244.0	258.0
244	**8.6614**	**15.7480**	**2.5591**	**.157**	**.157**	**13.7795**	**10.6299**	**11.260**
	220	400	65	4.0	4.0	350.0	270.0	286.0
248	**9.4488**	**17.3228**	**2.8346**	**.157**	**.157**	**15.1575**	**11.6142**	**12.323**
	240	440	72	4.0	4.0	385.0	295.0	313.0
252	**10.2362**	**18.8976**	**3.1496**	**.197**	**.197**	**16.5354**	**12.5984**	**13.386**
	260	480	80	5.0	5.0	420.0	320.0	340.0
256	**11.0236**	**19.6850**	**3.1496**	**.197**	**.197**	**17.3228**	**13.3858**	**14.173**
	280	500	80	5.0	5.0	440.0	340.0	360.0
260	**11.8110**	**21.2598**	**3.3465**	**.197**	**.197**	**18.7402**	**14.3307**	**15.236**
	300	540	85	5.0	5.0	476.0	364.0	387.0
264	**12.5984**	**22.8346**	**3.6220**	**.197**	**.197**	**20.0787**	**15.3543**	**16.339**
	320	580	92	5.0	5.0	510.0	390.0	415.0

CYLINDRICAL ROLLER BEARINGS

Units: **INCHES**
Millimeters

SERIES
NF2 • N2
NJ2 • NU2
HJ2
SEPARATE THRUST COLLAR

Basic Load Ratings (lbs) Dynamic C	Static C_o	Weight (lbs) N2	NU2	Separate Thrust Collar No.	Thrust Collar Dimensions d_t	D_t	B_t	b_t	r_1	Collar Weight (lbs)
3,750	3,150	.240	.245	HJ204	.787	1.181	.266	.118	.024	.026
					20	30.0	6.75	3	.6	
4,200	3,800	.295	.302	HJ205	.984	1.378	.285	.118	.024	.033
					25	35.0	7.25	3	.6	
5,600	5,250	.448	.456	HJ206	1.181	1.646	.325	.157	.024	.055
					30	41.8	8.25	4	.6	
8,000	7,700	.637	.650	HJ207	1.378	1.874	.315	.157	.024	.066
					35	47.6	8.00	4	.6	
9,850	9,650	.816	.833	HJ208	1.575	2.134	.354	.197	.059	.101
					40	54.2	9.00	5	1.5	
10,400	10,500	.933	.952	HJ209	1.772	2.323	.374	.197	.059	.117
					45	59.0	9.50	5	1.5	
11,400	12,200	1.06	1.08	HJ210	1.969	2.543	.394	.197	.059	.139
					50	64.6	10.00	5	1.5	
13,700	14,900	1.38	1.41	HJ211	2.165	2.787	.433	.236	.059	.185
					55	70.8	11.00	6	1.5	
16,200	18,000	1.77	1.80	HJ212	2.362	3.087	.433	.236	.079	.238
					60	78.4	11.00	6	2.0	
18,900	21,200	2.20	2.25	HJ213	2.559	3.339	.433	.236	.079	.271
					65	84.8	11.00	6	2.0	
19,600	22,700	2.43	2.47	HJ214	2.756	3.528	.492	.276	.079	.331
					70	89.6	12.50	7	2.0	
22,700	26,400	2.67	2.71	HJ215	2.953	3.701	.492	.276	.079	.344
					75	94.0	12.50	7	2.0	
25,000	29,200	3.24	3.31	HJ216	3.150	3.984	.531	.315	.098	.456
					80	101.2	13.50	8	2.5	
28,300	33,500	4.03	4.12	HJ217	3.346	4.260	.551	.315	.098	.551
					85	108.2	14.00	8	2.5	
34,000	40,000	4.96	5.07	HJ218	3.543	4.496	.591	.354	.098	.672
					90	114.2	15.00	9	2.5	
37,000	44,000	6.00	6.13	HJ219	3.740	4.764	.610	.354	.118	.776
					95	121.0	15.50	9	2.5	
41,000	49,000	7.19	7.34	HJ220	3.937	5.039	.669	.394	.118	.979
					100	128.0	17.00	10	2.5	
45,000	54,000	8.53	8.71	HJ221	4.134	5.315	.689	.394	.118	1.11
					105	135.0	17.50	10	2.5	
54,000	65,000	10.0	10.2	HJ222	4.331	5.571	.728	.433	.118	1.36
					110	141.5	18.50	11	2.5	
61,000	76,000	12.0	12.3	HJ224	4.724	6.024	.748	.433	.118	1.58
					120	153.0	19.00	11	2.5	
63,500	81,500	16.3	16.6	HJ226	5.118	6.516	.748	.433	.118	1.85
					130	165.5	19.00	11	3.0	
73,000	94,500	20.4	20.9	HJ228	5.512	7.067	.748	.433	.118	2.20
					140	179.5	19.00	11	3.0	
84,500	111,000	25.8	26.2	HJ230	5.906	7.598	.807	.472	.118	2.73
					150	193.0	20.50	12	3.0	
96,000	128,000	31.3	32.0	HJ232	6.299	8.150	.827	.472	.118	3.26
					160	207.0	21.00	12	3.0	
107,000	143,000	38.8	39.7	HJ234	6.693	8.681	.866	.472	.157	3.75
					170	220.5	22.00	12	4.0	
111,000	152,000	40.3	41.2	HJ236	7.087	9.075	.866	.472	.157	3.97
					180	230.5	22.00	12	4.0	
125,000	173,000	48.7	49.6	HJ238	7.480	9.626	.925	.512	.157	4.85
					190	244.5	23.50	13	4.0	
140,000	195,000	57.8	58.9	HJ240	7.874	10.157	.984	.551	.157	5.73
					200	258.0	25.00	14	4.0	
171,000	242,000	80.9	82.5	HJ244	8.661	11.260	1.083	.591	.157	7.83
					220	286.0	27.50	15	4.0	
211,000	300,000	109	111	HJ248	9.449	12.323	1.161	.630	.157	10.3
					240	313.0	29.50	16	4.0	
258,000	375,000	145	148	HJ252	10.236	13.386	1.299	.709	.197	13.7
					260	340.0	33.00	18	5.0	
267,000	395,000	153	156	HJ256	11.024	14.173	1.299	.709	.197	16.3
					280	360.0	33.00	18	5.0	
315,000	465,000	190	194	HJ260	11.811	15.236	1.358	.787	.197	20.2
					300	387.0	34.50	20	5.0	
360,000	540,000	240	245	HJ264	12.598	16.339	1.457	.827	.197	24.9
					320	415.0	37.00	21	5.0	

These figures may vary slightly according to cage type and type of bearing.

NU2

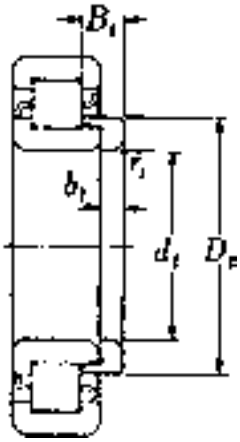

(NH2=NJ2+HJ2)

SERIES
NF3 • N3
NJ3 • NU3

Units: **INCHES**
Millimeters

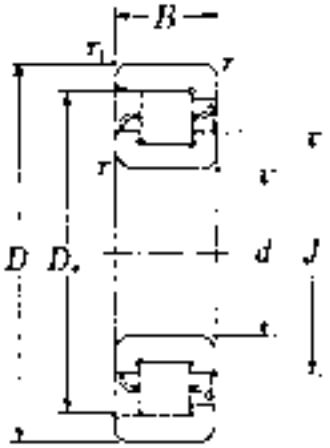

NF3

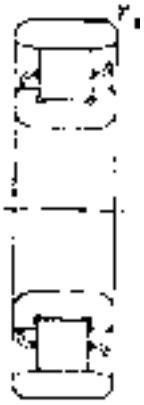

N3

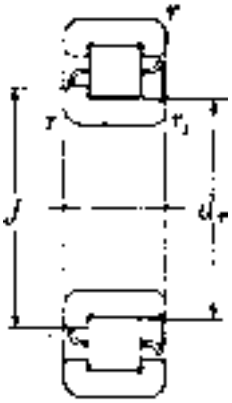

NJ3

CYLINDRICAL ROLLER BEARINGS

Bearing No.	Bore d	O.D. D	Width B	Fillet Radii r	Fillet Radii r_1	Outer Ring I.D. D_r	Inner Ring O.D. d_r	Shoulder Height J
304	**.7874**	**2.0472**	**.5906**	**.059**	**.024**	**1.7520**	**1.1220**	**1.252**
	20	52	15	1.5	.6	44.5	28.5	31.8
305	**.9843**	**2.4409**	**.6693**	**.059**	**.059**	**2.0866**	**1.3780**	**1.535**
	25	62	17	1.5	1.5	53.0	35.0	39.0
306	**1.1811**	**2.8346**	**.7480**	**.059**	**.059**	**2.4409**	**1.6535**	**1.807**
	30	72	19	1.5	1.5	62.0	42.0	45.9
307	**1.3780**	**3.1496**	**.8268**	**.079**	**.059**	**2.6850**	**1.8189**	**2.000**
	35	80	21	2.0	1.5	68.2	46.2	50.8
308	**1.5748**	**3.5433**	**.9055**	**.079**	**.079**	**3.0512**	**2.1063**	**2.299**
	40	90	23	2.0	2.0	77.5	53.5	58.4
309	**1.7717**	**3.9370**	**.9843**	**.079**	**.079**	**3.4055**	**2.3031**	**2.520**
	45	100	25	2.0	2.0	86.5	58.5	64.0
310	**1.9685**	**4.3307**	**1.0630**	**.098**	**.098**	**3.7402**	**2.5591**	**2.795**
	50	110	27	2.5	2.5	95.0	65.0	71.0
311	**2.1654**	**4.7244**	**1.1417**	**.098**	**.098**	**4.1142**	**2.7756**	**3.039**
	55	120	29	2.5	2.5	104.5	70.5	77.2
312	**2.3622**	**5.1181**	**1.2205**	**.098**	**.098**	**4.4488**	**3.0315**	**3.315**
	60	130	31	2.5	2.5	113.0	77.0	84.2
313	**2.5591**	**5.5118**	**1.2992**	**.098**	**.098**	**4.7835**	**3.2874**	**3.583**
	65	140	33	2.5	2.5	121.5	83.5	91.0
314	**2.7559**	**5.9055**	**1.3780**	**.098**	**.098**	**5.1181**	**3.5433**	**3.858**
	70	150	35	2.5	2.5	130.0	90.0	98.0
315	**2.9528**	**6.2992**	**1.4567**	**.098**	**.098**	**5.4921**	**3.7598**	**4.102**
	75	160	37	2.5	2.5	139.5	95.5	104.2
316	**3.1496**	**6.6929**	**1.5354**	**.098**	**.098**	**5.7874**	**4.0551**	**4.402**
	80	170	39	2.5	2.5	147.0	103.0	111.8
317	**3.3465**	**7.0866**	**1.6142**	**.118**	**.118**	**6.1417**	**4.2520**	**4.626**
	85	180	41	3.0	3.0	156.0	108.0	117.5
318	**3.5433**	**7.4803**	**1.6929**	**.118**	**.118**	**6.4961**	**4.5276**	**4.921**
	90	190	43	3.0	3.0	165.0	115.0	125.0
319	**3.7402**	**7.8740**	**1.7717**	**.118**	**.118**	**6.8307**	**4.7835**	**5.197**
	95	200	45	3.0	3.0	173.5	121.5	132.0
320	**3.9370**	**8.4646**	**1.8504**	**.118**	**.118**	**7.3031**	**5.0984**	**5.531**
	100	215	47	3.0	3.0	185.5	129.5	140.5
321	**4.1339**	**8.8583**	**1.9291**	**.118**	**.118**	**7.6772**	**5.3150**	**5.787**
	105	225	49	3.0	3.0	195.0	135.0	147.0
322	**4.3307**	**9.4488**	**1.9685**	**.118**	**.118**	**8.1496**	**5.6299**	**6.122**
	110	240	50	3.0	3.0	207.0	143.0	155.5
324	**4.7244**	**10.2362**	**2.1654**	**.118**	**.118**	**8.8976**	**6.0630**	**6.634**
	120	260	55	3.0	3.0	226.0	154.0	168.5
326	**5.1181**	**11.0236**	**2.2835**	**.157**	**.157**	**9.5669**	**6.5748**	**7.165**
	130	280	58	4.0	4.0	243.0	167.0	182.0
328	**5.5118**	**11.8110**	**2.4409**	**.157**	**.157**	**10.2362**	**7.0866**	**7.717**
	140	300	62	4.0	4.0	260.0	180.0	196.0
330	**5.9055**	**12.5984**	**2.5591**	**.157**	**.157**	**10.9055**	**7.5984**	**8.268**
	150	320	65	4.0	4.0	277.0	193.0	210.0
332	**6.2992**	**13.3858**	**2.6772**	**.157**	**.157**	**11.4961**	**8.1890**	**8.858**
	160	340	68	4.0	4.0	292.0	208.0	225.0
334	**6.6929**	**14.1732**	**2.8346**	**.157**	**.157**	**12.2047**	**8.6614**	**9.370**
	170	360	72	4.0	4.0	310.0	220.0	238.0
336	**7.0866**	**14.9606**	**2.9528**	**.157**	**.157**	**12.9134**	**9.1339**	**9.921**
	180	380	75	4.0	4.0	328.0	232.0	252.0
338	**7.4803**	**15.7480**	**3.0709**	**.197**	**.197**	**13.5827**	**9.6457**	**10.433**
	190	400	78	5.0	5.0	345.0	245.0	265.0
340	**7.8740**	**16.5354**	**3.1496**	**.197**	**.197**	**14.1732**	**10.2362**	**11.024**
	200	420	80	5.0	5.0	360.0	260.0	280.0
344	**8.6614**	**18.1102**	**3.4646**	**.197**	**.197**	**15.5906**	**11.1811**	**12.087**
	220	460	88	5.0	5.0	396.0	284.0	307.0
348	**9.4488**	**19.6850**	**3.7402**	**.197**	**.197**	**16.9291**	**12.2047**	**13.189**
	240	500	95	5.0	5.0	430.0	310.0	335.0
352	**10.2362**	**21.2598**	**4.0157**	**.236**	**.236**	**18.2677**	**13.2283**	**14.252**
	260	540	102	6.0	6.0	464.0	336.0	362.0
356	**11.0236**	**22.8346**	**4.2520**	**.236**	**.236**	**19.6063**	**14.2520**	**15.354**
	280	580	108	6.0	6.0	498.0	362.0	390.0

CYLINDRICAL ROLLER BEARINGS

Units: **INCHES**
Millimeters

SERIES
NF3 • N3
NJ3 • NU3
HJ3
SEPARATE THRUST COLLAR

Basic Load Ratings (lbs) Dynamic C	Static C_o	Weight (lbs) $N3$	$NU3$	Separate Thrust Collar No.	Thrust Collar Dimensions d_t	D_t	B_t	b_t	r_1	Collar Weight (lbs)
5,200	4,350	.328	.337	HJ304	.787	1.252	.295	.157	.024	.037
					20	31.8	7.5	4	.6	
7,050	6,250	.518	.531	HJ305	.984	1.535	.315	.157	.059	.055
					25	39.0	8.0	4	1.5	
8,700	7,900	.772	.789	HJ306	1.181	1.807	.374	.197	.059	.086
					30	45.9	9.5	5	1.5	
11,200	10,500	1.03	1.05	HJ307	1.378	2.000	.433	.236	.059	.123
					35	50.8	11.0	6	1.5	
13,200	12,800	1.42	1.45	HJ308	1.575	2.299	.492	.276	.079	.183
					40	58.4	12.5	7	2.0	
17,700	17,400	1.89	1.93	HJ309	1.772	2.520	.492	.276	.079	.218
					45	64.0	12.5	7	2.0	
19,500	19,400	2.45	2.51	HJ310	1.969	2.795	.551	.315	.098	.313
					50	71.0	14.0	8	2.5	
24,900	25,000	3.13	3.20	HJ311	2.165	3.039	.591	.354	.098	.401
					55	77.2	15.0	9	2.5	
27,800	28,400	3.90	3.99	HJ312	2.362	3.315	.610	.354	.098	.485
					60	84.2	15.5	9	2.5	
30,500	31,000	4.81	4.92	HJ313	2.559	3.583	.669	.394	.098	.617
					65	91.0	17.0	10	2.5	
35,500	38,000	5.84	5.97	HJ314	2.756	3.858	.689	.394	.098	.728
					70	98.0	17.5	10	2.5	
43,000	46,000	7.01	7.17	HJ315	2.953	4.102	.728	.433	.098	.882
					75	104.2	18.5	11	2.5	
45,000	50,000	8.31	8.51	HJ316	3.150	4.402	.768	.433	.098	1.04
					80	111.8	19.5	11	2.5	
50,500	55,500	9.79	10.0	HJ317	3.346	4.626	.807	.472	.118	1.23
					85	117.5	20.5	12	3.0	
54,000	59,500	11.4	11.7	HJ318	3.543	4.921	.827	.472	.118	1.39
					90	125.0	21.0	12	3.0	
61,500	70,000	13.2	13.5	HJ319	3.740	5.197	.886	.512	.118	1.68
					95	132.0	22.5	13	3.0	
71,000	81,500	16.1	16.5	HJ320	3.937	5.531	.886	.512	.118	1.97
					100	140.5	22.5	13	3.0	
81,000	94,000	22.1	22.5	HJ321	4.134	5.787	.886	.512	.118	2.14
					105	147.0	22.5	13	3.0	
90,500	105,000	25.8	26.5	HJ322	4.331	6.122	.906	.551	.118	2.58
					110	155.5	23.0	14	3.0	
107,000	124,000	33.3	34.2	HJ324	4.724	6.634	.925	.551	.118	3.09
					120	168.5	23.5	14	3.0	
126,000	150,000	39.2	40.1	HJ326	5.118	7.165	.945	.551	.157	3.57
					130	182.0	24.0	14	4.0	
139,000	168,000	48.1	49.2	HJ328	5.512	7.717	1.024	.591	.157	4.25
					140	196.0	26.0	15	4.0	
149,000	182,000	57.1	58.4	HJ330	5.906	8.268	1.043	.591	.157	5.22
					150	210.0	26.5	15	4.0	
157,000	197,000	67.5	69.0	HJ332	6.299	8.858	1.102	.591	.157	6.06
					160	225.0	28.0	15	4.0	
179,000	227,000	79.6	81.6	HJ334	6.693	9.370	1.161	.630	.157	7.17
					170	238.0	29.5	16	4.0	
203,000	260,000	92.4	94.6	HJ336	7.087	9.921	1.201	.669	.157	8.49
					180	252.0	30.5	17	4.0	
219,000	283,000	106	109	HJ338	7.480	10.433	1.260	.709	.197	9.81
					190	265.0	32.0	18	5.0	
219,000	286,000	120	123	HJ340	7.874	11.024	1.299	.709	.197	11.0
					200	280.0	33.0	18	5.0	
268,000	355,000	158	162	HJ344	8.661	12.087	1.417	.787	.197	15.5
					220	307.0	36.0	20	5.0	
320,000	440,000	201	206	HJ348	9.449	13.189	1.555	.866	.197	18.1
					240	335.0	39.5	22	5.0	
365,000	500,000	251	258	HJ352	10.236	14.252	1.693	.945	.236	25.1
					260	362.0	43.0	24	6.0	
410,000	570,000	306	313	HJ356	11.024	15.354	1.811	1.024	.236	30.6
					280	390.0	46.0	26	6.0	

These figures may vary slightly according to cage type and type of bearing.

NU3

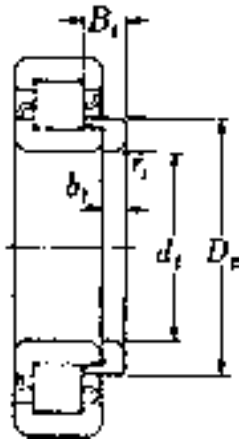

(NH3=NJ3+HJ3)

NTN

SERIES
NF4 • N4
NJ4 • NU4

Units: **INCHES**
Millimeters

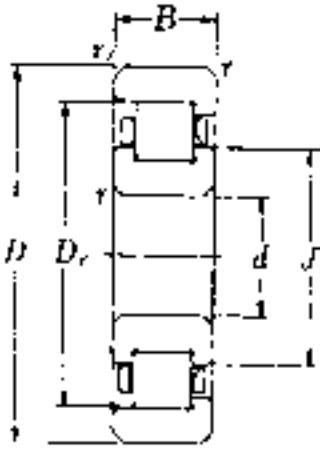

NF4

N4

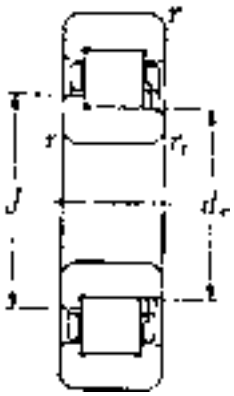

NJ4

CYLINDRICAL ROLLER BEARINGS

Bearing No.	Bore d	O.D. D	Width B	Fillet Radius r	Fillet Radius r_1	Outer Ring I.D. D_r	Inner Ring O.D. d_r	Shoulder Height J
406	**1.1811**	**3.5433**	**.9055**	**.079**		**2.8740**	**1.7717**	**1.988**
	30	90	23	2.0		73.0	45.0	50.5
407	**1.3780**	**3.9370**	**.9843**	**.079**		**3.2677**	**2.0866**	**2.323**
	35	100	25	2.0		83.0	53.0	59.0
408	**1.5748**	**4.3307**	**1.0630**	**.098**		**3.6220**	**2.2835**	**2.551**
	40	110	27	2.5		92.0	58.0	64.8
409	**1.7717**	**4.7244**	**1.1417**	**.098**		**3.9567**	**2.5394**	**2.827**
	45	120	29	2.5		100.5	64.5	71.8
410	**1.9685**	**5.1181**	**1.2205**	**.098**		**4.3622**	**2.7874**	**3.102**
	50	130	31	2.5		110.8	70.8	78.8
411	**2.1654**	**5.5118**	**1.2992**	**.098**		**4.6142**	**3.0394**	**3.354**
	55	140	33	2.5		117.2	77.2	85.2
412	**2.3622**	**5.9055**	**1.3780**	**.098**		**5.0000**	**3.2677**	**3.614**
	60	150	35	2.5		127.0	83.0	91.8
413	**2.5591**	**6.2992**	**1.4567**	**.098**		**5.3268**	**3.5157**	**3.878**
	65	160	37	2.5		135.3	89.3	98.5
414	**2.7559**	**7.0866**	**1.6535**	**.118**		**5.9843**	**3.9370**	**4.350**
	70	180	42	3.0		152.0	100.0	110.5
415	**2.9528**	**7.4803**	**1.7717**	**.118**		**6.3189**	**4.1142**	**4.567**
	75	190	45	3.0		160.5	104.5	116.0
416	**3.1496**	**7.8740**	**1.8898**	**.118**		**6.6929**	**4.3307**	**4.803**
	80	200	48	3.0		170.0	110.0	122.0
417	**3.3465**	**8.2677**	**2.0472**	**.157**		**6.9685**	**4.4488**	**4.961**
	85	210	52	4.0		177.0	113.0	126.0
418	**3.5433**	**8.8583**	**2.1260**	**.157**		**7.5394**	**4.8622**	**5.394**
	90	225	54	4.0		191.5	123.5	137.0
419	**3.7402**	**9.4488**	**2.1654**	**.157**		**7.9331**	**5.2559**	**5.787**
	95	240	55	4.0		201.5	133.5	147.0
420	**3.9370**	**9.8425**	**2.2835**	**.157**		**8.3071**	**5.4724**	**6.043**
	100	250	58	4.0		211.0	139.0	153.5
421	**4.1339**	**10.2362**	**2.3622**	**.157**		**8.6811**	**5.6890**	**6.280**
	105	260	60	4.0		220.5	144.5	159.5
422	**4.3307**	**11.0236**	**2.5591**	**.157**		**9.2520**	**6.1024**	**6.732**
	110	280	65	4.0		235.0	155.0	171.0
424	**4.7244**	**12.2047**	**2.8346**	**.197**		**10.2362**	**6.6929**	**7.402**
	120	310	72	5.0		260.0	170.0	188.0
426	**5.1181**	**13.3858**	**3.0709**	**.197**		**11.2205**	**7.2835**	**8.071**
	130	340	78	5.0		285.0	185.0	205.0
428	**5.5118**	**14.7132**	**3.2283**	**.197**		**11.8898**	**7.7953**	**8.622**
	140	374	82	5.0		302.0	198.0	219.0
430	**5.9055**	**14.9606**	**3.3465**	**.197**		**12.4803**	**8.3858**	**9.213**
	150	380	85	5.0		317.0	213.0	234.0

CYLINDRICAL ROLLER BEARINGS

Units: **INCHES**
Millimeters

SERIES
NF4 • N4
NJ4 • NU4
HJ4

SEPARATE THRUST COLLAR

Basic Load Ratings (lbs) Dynamic C	Static C_o	Weight (lbs) N4	NU4	Separate Thrust Collar No.	Thrust Collar Dimensions d_t	D_t	B_t	b_t	r_1	Collar Weight (lbs)
14,100	12,400	1.75	1.79	HJ406	1.181	1.988	.453	.276	.079	.176
					30	50.5	11.5	7	2.0	
16,900	15,500	2.29	2.36	HJ407	1.378	2.323	.512	.315	.079	.265
					35	59.0	13.0	8	2.0	
21,500	20,000	3.02	3.09	HJ408	1.575	2.551	.512	.315	.098	.309
					40	64.8	13.0	8	2.5	
25,900	25,100	3.77	3.86	HJ409	1.772	2.827	.531	.315	.098	.386
					45	71.8	13.5	8	2.5	
31,000	30,500	4.70	4.81	HJ410	1.969	3.102	.571	.354	.098	.507
					50	78.8	14.5	9	2.5	
31,500	31,000	5.78	5.91	HJ411	2.165	3.354	.650	.394	.098	.639
					55	85.2	16.5	10	2.5	
37,500	38,000	6.97	7.14	HJ412	2.362	3.614	.650	.394	.098	.750
					60	91.8	16.5	10	2.5	
44,000	45,500	8.36	8.55	HJ413	2.559	3.878	.709	.433	.098	.926
					65	98.5	18.0	11	2.5	
54,500	58,000	12.2	12.5	HJ414	2.756	4.350	.787	.472	.118	1.33
					70	110.5	20.0	12	3.0	
59,000	61,500	14.5	14.8	HJ415	2.953	4.567	.846	.512	.118	1.57
					75	116.0	21.5	13	3.0	
67,500	71,000	17.0	17.4	HJ416	3.150	4.803	.866	.512	.118	1.72
					80	122.0	22.0	13	3.0	
75,000	78,500	20.2	20.7	HJ417	3.346	4.961	.945	.551	.157	1.94
					85	126.0	24.0	14	4.0	
84,000	90,000	24.0	24.7	HJ418	3.543	5.394	.945	.551	.157	2.31
					90	137.0	24.0	14	4.0	
90,000	99,500	28.4	29.1	HJ419	3.740	5.787	1.004	.591	.157	2.87
					95	147.0	25.5	15	4.0	
101,000	111,000	32.0	32.8	HJ420	3.937	6.043	1.063	.630	.157	3.31
					100	153.5	27.0	16	4.0	
112,000	125,000	35.7	36.6	HJ421	4.134	6.280	1.063	.630	.157	3.64
					105	159.5	27.0	16	4.0	
123,000	140,000	45.4	46.5	HJ422	4.331	6.732	1.161	.669	.157	4.63
					110	171.0	29.5	17	4.0	
151,000	173,000	62.2	63.7	HJ424	4.724	7.402	1.201	.669	.197	5.73
					120	188.0	30.5	17	5.0	
185,000	215,000	81.1	83.1	HJ426	5.118	8.071	1.260	.709	.197	7.28
					130	205.0	32.0	18	5.0	
197,000	230,000	95.2	97.7	HJ428	5.512	8.622	1.299	.709	.197	8.27
					140	219.0	33.0	18	5.0	
209,000	253,000	190	112	HJ430	5.906	9.213	1.437	.787	.197	10.40
					150	234.0	36.5	20	5.0	

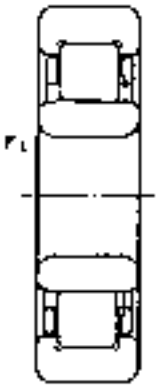

NU4

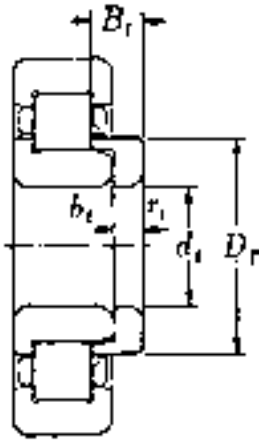

NH4=NJ4+HJ4

These figures may vary slightly according to cage type and type of bearing.

SERIES
NJ22
NU22

Units: **INCHES**
Millimeters

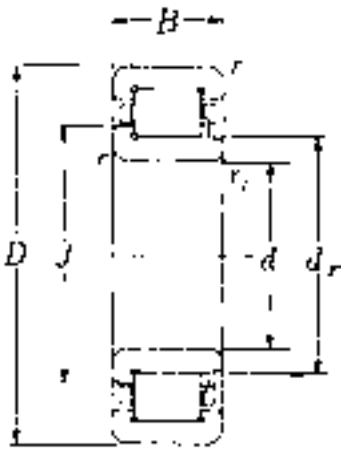

NJ22

NU22

CYLINDRICAL ROLLER BEARINGS

Bearing No.	Bore d	O.D. D	Width B	Fillet Radii r	Fillet Radii r_1	Inner Ring O.D. d_r	Shoulder Height J
2205	**.9843**	**2.0472**	**.7087**	**.039**	**.024**	**1.2598**	**1.378**
	25	52	18	1.0	.6	32.0	35.0
2206	**1.1811**	**2.4409**	**.7874**	**.039**	**.024**	**1.5157**	**1.646**
	30	62	20	1.0	.6	38.5	41.8
2207	**1.3780**	**2.8346**	**.9055**	**.059**	**.024**	**1.7244**	**1.874**
	35	72	23	1.5	.6	43.8	47.6
2208	**1.5748**	**3.1496**	**.9055**	**.059**	**.059**	**1.9685**	**2.134**
	40	80	23	1.5	1.5	50.0	54.2
2209	**1.7717**	**3.3465**	**.9055**	**.059**	**.059**	**2.1654**	**2.323**
	45	85	23	1.5	1.5	55.0	59.0
2210	**1.9685**	**3.5433**	**.9055**	**.059**	**.059**	**2.3780**	**2.543**
	50	90	23	1.5	1.5	60.4	64.6
2211	**2.1654**	**3.9370**	**.9843**	**.079**	**.059**	**2.6181**	**2.787**
	55	100	25	2.0	1.5	66.5	70.8
2212	**2.3622**	**4.3307**	**1.1024**	**.079**	**.079**	**2.8937**	**3.087**
	60	110	28	2.0	2.0	73.5	78.4
2213	**2.5591**	**4.7244**	**1.2205**	**.079**	**.079**	**3.1339**	**3.339**
	65	120	31	2.0	2.0	79.6	84.8
2214	**2.7559**	**4.9213**	**1.2205**	**.079**	**.079**	**3.3268**	**3.528**
	70	125	31	2.0	2.0	84.5	89.6
2215	**2.9528**	**5.1181**	**1.2205**	**.079**	**.079**	**3.4843**	**3.701**
	75	130	31	2.0	2.0	88.5	94.0
2216	**3.1496**	**5.5118**	**1.2992**	**.098**	**.098**	**3.7520**	**3.984**
	80	140	33	2.5	2.5	95.3	101.2
2217	**3.3465**	**5.9055**	**1.4173**	**.098**	**.098**	**4.0079**	**4.260**
	85	150	36	2.5	2.5	101.8	108.2
2218	**3.5433**	**6.2992**	**1.5748**	**.098**	**.098**	**4.2126**	**4.496**
	90	160	40	2.5	2.5	107.0	114.2
2219	**3.7402**	**6.6929**	**1.6929**	**.098**	**.098**	**4.4685**	**4.764**
	95	170	43	2.5	2.5	113.5	121.0
2220	**3.9370**	**7.0866**	**1.8110**	**.098**	**.098**	**4.7244**	**5.039**
	100	180	46	2.5	2.5	120.0	128.0
2222	**4.3307**	**7.8740**	**2.0866**	**.098**	**.098**	**5.2165**	**5.571**
	110	200	53	2.5	2.5	132.5	141.5
2224	**4.7244**	**8.4646**	**2.2835**	**.098**	**.098**	**5.6496**	**6.024**
	120	215	58	2.5	2.5	143.5	153.0
2226	**5.1181**	**9.0551**	**2.5197**	**.118**	**.118**	**6.1417**	**6.516**
	130	230	64	3.0	3.0	156.0	165.5
2228	**5.5118**	**9.8425**	**2.6772**	**.118**	**.118**	**6.6535**	**7.067**
	140	250	68	3.0	3.0	169.0	179.5
2230	**5.9055**	**10.6299**	**2.8740**	**.118**	**.118**	**7.1654**	**7.598**
	150	270	73	3.0	3.0	182.0	193.0
2232	**6.2992**	**11.4173**	**3.1496**	**.118**	**.118**	**7.6772**	**8.150**
	160	290	80	3.0	3.0	195.0	207.0
2234	**6.6929**	**12.2047**	**3.3858**	**.157**	**.157**	**8.1890**	**8.681**
	170	310	86	4.0	4.0	208.0	220.5
2236	**7.0866**	**12.5984**	**3.3858**	**.157**	**.157**	**8.5827**	**9.075**
	180	320	86	4.0	4.0	218.0	230.5
2238	**7.4803**	**13.3858**	**3.6220**	**.157**	**.157**	**9.0945**	**9.626**
	190	340	92	4.0	4.0	231.0	244.5
2240	**7.8740**	**14.1732**	**3.8583**	**.157**	**.157**	**9.6063**	**10.157**
	200	360	98	4.0	4.0	244.0	258.0

CYLINDRICAL ROLLER BEARINGS

Units: **INCHES**
Millimeters

SERIES
NJ22
NU22
HJ22

SEPARATE THRUST COLLAR

Basic Load Ratings (lbs) Dynamic C	Static C_o	Weight (lbs) NJ22	NU22	Separate Thrust Collar No.	Thrust Collar Dimensions d_t	D_t	B_t	b_t	r_1	Collar Weight (lbs)
5,650	5,550	.412	.401	HJ2205	.984	1.378	.295	.118	.024	.033
					25	35.0	7.5	3.0	.6	
7,850	8,050	.639	.631	HJ2206	1.181	1.646	.335	.157	.024	.055
					30	41.8	8.5	4.0	.6	
11,700	12,500	1.00	.974	HJ2207	1.378	1.874	.335	.157	.024	.068
					35	47.6	8.5	4.0	.6	
13,100	13,900	1.21	1.18	HJ2208	1.575	2.134	.374	.197	.059	.104
					40	54.2	9.5	5.0	1.5	
13,800	15,200	1.31	1.28	HJ2209	1.772	2.323	.374	.197	.059	.117
					45	59.0	9.5	5.0	1.5	
15,200	17,700	1.42	1.38	HJ2210	1.969	2.543	.374	.197	.059	.134
					50	64.6	9.5	5.0	1.5	
17,800	20,900	1.94	1.88	HJ2211	2.165	2.787	.433	.236	.059	.185
					55	70.8	11.0	6.0	1.5	
22,700	27,800	2.65	2.58	HJ2212	2.362	3.087	.433	.236	.079	.238
					60	78.4	11.0	6.0	2.0	
27,000	33,500	3.48	3.40	HJ2213	2.559	3.339	.453	.236	.079	.278
					65	84.8	11.5	6.0	2.0	
28,100	36,000	3.70	3.59	HJ2214	2.756	3.528	.492	.276	.079	.331
					70	89.6	12.5	7.0	2.0	
30,500	38,500	3.88	3.77	HJ2215	2.953	3.701	.492	.276	.079	.344
					75	94.0	12.5	7.0	2.0	
34,500	44,500	4.83	4.70	HJ2216	3.150	3.984	.531	.315	.098	.456
					80	101.2	13.5	8.0	2.5	
40,000	52,000	6.11	5.93	HJ2217	3.346	4.260	.551	.315	.098	.551
					85	108.2	14.0	8.0	2.5	
46,500	59,500	7.78	7.56	HJ2218	3.543	4.496	.630	.354	.098	.694
					90	114.2	16.0	9.0	2.5	
52,000	67,000	9.50	9.24	HJ2219	3.740	4.764	.650	.354	.098	.800
					95	121.0	16.5	9.0	2.5	
58,000	76,000	11.4	11.1	HJ2220	3.937	5.039	.709	.394	.098	1.01
					100	128.0	18.0	10.0	2.5	
75,000	99,500	16.4	16.0	HJ2222	4.331	5.571	.807	.433	.098	1.42
					110	141.5	20.5	11.0	2.5	
86,000	118,000	20.5	19.9	HJ2224	4.724	6.024	.866	.433	.098	1.69
					120	153.0	22.0	11.0	2.5	
89,000	126,000	25.6	24.9	HJ2226	5.118	6.516	.984	.433	.118	2.10
					130	165.5	25.0	11.0	3.0	
105,000	151,000	32.4	31.5	HJ2228	5.512	7.067	.984	.433	.118	2.51
					140	179.5	25.0	11.0	3.0	
123,000	180,000	40.8	39.7	HJ2230	5.906	7.598	1.043	.472	.118	3.06
					150	193.0	26.5	12.0	3.0	
142,000	211,000	52.0	50.7	HJ2232	6.299	8.150	1.102	.472	.118	3.73
					160	207.0	28.0	12.0	3.0	
161,000	242,000	64.2	62.4	HJ2234	6.693	8.681	1.142	.472	.157	4.25
					170	220.5	29.0	12.0	4.0	
167,000	257,000	66.8	65.0	HJ2236	7.087	9.075	1.142	.472	.157	4.50
					180	230.5	29.0	12.0	4.0	
187,000	290,000	81.1	78.9	HJ2238	7.480	9.626	1.240	.512	.157	5.56
					190	244.5	31.5	13.0	4.0	
208,000	325,000	97.4	94.8	HJ2240	7.874	10.157	1.339	.551	.157	6.59
					200	258.0	34.0	14.0	4.0	

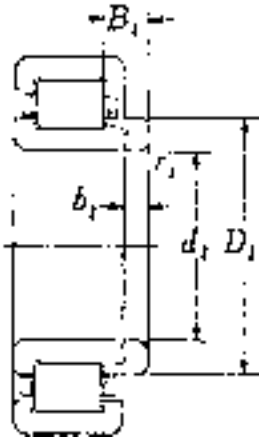

NH22=NJ22+HJ22

These figures may vary according to cage type and type of bearing.

SERIES
NJ23
NU23

Units: **INCHES**
Millimeters

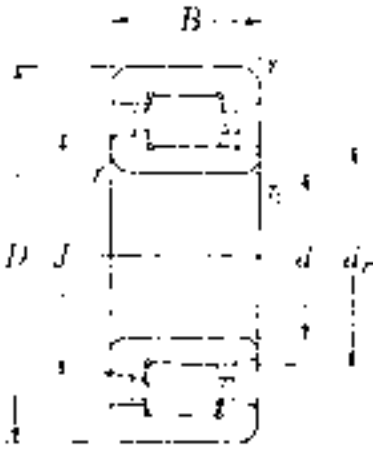

NJ23

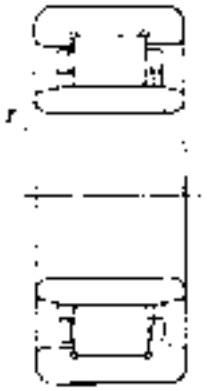

NU23

CYLINDRICAL ROLLER BEARINGS

Bearing No.	Bore d	O.D. D	Width B	Fillet Radii r	Fillet Radii r_1	Inner Ring O.D. d_r	Shoulder Height J
2305	**.9843**	**2.4409**	**.9449**	**.059**	**.059**	**1.3780**	**1.535**
	25	62	24	1.5	1.5	35.0	39.0
2306	**1.1811**	**2.8346**	**1.0630**	**.059**	**.059**	**1.6535**	**1.807**
	30	72	27	1.5	1.5	42.0	45.9
2307	**1.3780**	**3.1496**	**1.2205**	**.079**	**.059**	**1.8189**	**2.000**
	35	80	31	2.0	1.5	46.2	50.8
2308	**1.5748**	**3.5433**	**1.2992**	**.079**	**.079**	**2.1063**	**2.299**
	40	90	33	2.0	2.0	53.5	58.4
2309	**1.7717**	**3.9370**	**1.4173**	**.079**	**.079**	**2.3031**	**2.520**
	45	100	36	2.0	2.0	58.5	64.0
2310	**1.9685**	**4.3307**	**1.5748**	**.098**	**.098**	**2.5591**	**2.795**
	50	110	40	2.5	2.5	65.0	71.0
2311	**2.1654**	**4.7244**	**1.6929**	**.098**	**.098**	**2.7756**	**3.039**
	55	120	43	2.5	2.5	70.5	77.2
2312	**2.3622**	**5.1181**	**1.8110**	**.098**	**.098**	**3.0315**	**3.315**
	60	130	46	2.5	2.5	77.0	84.2
2313	**2.5591**	**5.5118**	**1.8898**	**.098**	**.098**	**3.2874**	**3.583**
	65	140	48	2.5	2.5	83.5	91.0
2314	**2.7559**	**5.9055**	**2.0079**	**.098**	**.098**	**3.5433**	**3.858**
	70	150	51	2.5	2.5	90.0	98.0
2315	**2.9528**	**6.2992**	**2.1654**	**.098**	**.098**	**3.7598**	**4.102**
	75	160	55	2.5	2.5	95.5	104.2
2316	**3.1496**	**6.6929**	**2.2835**	**.098**	**.098**	**4.0551**	**4.402**
	80	170	58	2.5	2.5	103.0	111.8
2317	**3.3465**	**7.0866**	**2.3622**	**.118**	**.118**	**4.2520**	**4.626**
	85	180	60	3.0	3.0	108.0	117.5
2318	**3.5433**	**7.4803**	**2.5197**	**.118**	**.118**	**4.5276**	**4.921**
	90	190	64	3.0	3.0	115.0	125.0
2319	**3.7402**	**7.8740**	**2.6378**	**.118**	**.118**	**4.7835**	**5.197**
	95	200	67	3.0	3.0	121.5	132.0
2320	**3.9370**	**8.4646**	**2.8740**	**.118**	**.118**	**5.0984**	**5.531**
	100	215	73	3.0	3.0	129.5	140.5
2322	**4.3307**	**9.4488**	**3.1496**	**.118**	**.118**	**5.6299**	**6.122**
	110	240	80	3.0	3.0	143.0	155.5
2324	**4.7244**	**10.2362**	**3.3858**	**.118**	**.118**	**6.0630**	**6.634**
	120	260	86	3.0	3.0	154.0	168.5
2326	**5.1181**	**11.0236**	**3.6614**	**.157**	**.157**	**6.5748**	**7.165**
	130	280	93	4.0	4.0	167.0	182.0
2328	**5.5118**	**11.8110**	**4.0157**	**.157**	**.157**	**7.0866**	**7.717**
	140	300	102	4.0	4.0	180.0	196.0
2330	**5.9055**	**12.5984**	**4.2520**	**.157**	**.157**	**7.5984**	**8.268**
	150	320	108	4.0	4.0	193.0	210.0
2332	**6.2992**	**13.3858**	**4.4882**	**.157**	**.157**	**8.1890**	**8.858**
	160	340	114	4.0	4.0	208.0	225.0
2334	**6.6929**	**14.1732**	**4.7244**	**.157**	**.157**	**8.6614**	**9.370**
	170	360	120	4.0	4.0	220.0	238.0
2336	**7.0866**	**14.9606**	**4.9606**	**.157**	**.157**	**9.1339**	**9.921**
	180	380	126	4.0	4.0	232.0	252.0
2338	**7.4803**	**15.7480**	**5.1969**	**.197**	**.197**	**9.6457**	**10.433**
	190	400	132	5.0	5.0	245.0	265.0
2340	**7.8740**	**16.5354**	**5.4331**	**.197**	**.197**	**10.2362**	**11.024**
	200	420	138	5.0	5.0	260.0	280.0

CYLINDRICAL ROLLER BEARINGS

Units: **INCHES**
Millimeters

SERIES
NJ23
NU23
HJ23
SEPARATE THRUST COLLAR

Basic Load Ratings (lbs) Dynamic C	Static C_o	Weight (lbs) NJ23	NU23	Separate Thrust Collar No.	Thrust Collar Dimensions d_t	D_t	B_t	b_t	r_1	Collar Weight (lbs)
10,300	10,100	.840	.816	HJ2305	.984	1.535	.354	.157	.059	.060
					25	39.0	9.0	4	1.5	
11,600	11,400	1.26	1.22	HJ2306	1.181	1.807	.453	.197	.059	.095
					30	45.9	11.5	5	1.5	
14,500	14,800	1.74	1.69	HJ2307	1.378	2.000	.551	.236	.059	.141
					35	50.8	14.0	6	1.5	
18,500	19,800	2.31	2.25	HJ2308	1.575	2.299	.571	.276	.079	.198
					40	58.4	14.5	7	2.0	
23,800	25,500	3.11	3.02	HJ2309	1.772	2.520	.591	.276	.079	.240
					45	64.0	15.0	7	2.0	
27,100	29,500	4.14	4.03	HJ2310	1.969	2.795	.669	.315	.098	.346
					50	71.0	17.0	8	2.5	
33,500	36,500	5.31	5.16	HJ2311	2.165	3.039	.728	.354	.098	.448
					55	77.2	18.5	9	2.5	
38,000	40,500	6.61	6.44	HJ2312	2.362	3.315	.748	.354	.098	.540
					60	84.2	19.0	9	2.5	
42,000	48,000	8.00	7.76	HJ2313	2.559	3.583	.787	.394	.098	.670
					65	91.0	20.0	10	2.5	
50,000	59,000	9.72	9.44	HJ2314	2.756	3.858	.807	.394	.098	.789
					70	98.0	20.5	10	2.5	
61,500	73,500	11.9	11.6	HJ2315	2.953	4.102	.846	.433	.098	.952
					75	104.2	21.5	11	2.5	
61,500	74,500	14.6	14.2	HJ2316	3.150	4.402	.906	.433	.098	1.13
					80	111.8	23.0	11	2.5	
71,000	86,000	16.9	16.4	HJ2317	3.346	4.626	.945	.472	.118	1.34
					85	117.5	24.0	12	3.0	
73,500	88,500	20.0	19.5	HJ2318	3.543	4.921	1.024	.472	.118	1.55
					90	125.0	26.0	12	3.0	
88,500	112,000	23.1	22.5	HJ2319	3.740	5.197	1.043	.512	.118	1.82
					95	132.0	26.5	13	3.0	
104,000	133,000	29.5	28.7	HJ2320	3.937	5.531	1.083	.512	.118	2.17
					100	140.5	27.5	13	3.0	
136,000	177,000	40.6	39.5	HJ2322	4.331	6.122	1.102	.551	.118	2.82
					110	155.5	28.0	14	3.0	
159,000	206,000	51.1	49.6	HJ2324	4.724	6.634	1.102	.551	.118	3.37
					120	168.5	28.0	14	3.0	
189,000	253,000	63.9	62.2	HJ2326	5.118	7.165	1.161	.551	.157	3.97
					130	182.0	29.5	14	4.0	
207,000	281,000	80.2	77.8	HJ2328	5.512	7.717	1.319	.591	.157	4.87
					140	196.0	33.5	15	4.0	
229,000	315,000	96.6	93.7	HJ2330	5.906	8.268	1.339	.591	.157	5.93
					150	210.0	34.0	15	4.0	
241,000	340,000	115	111	HJ2332	6.299	8.858	1.457	.591	.157	6.97
					160	225.0	37.0	15	4.0	
275,000	395,000	135	131	HJ2334	6.693	9.370	1.516	.630	.157	8.18
					170	238.0	38.5	16	4.0	
310,000	450,000	158	153	HJ2336	7.087	9.921	1.575	.669	.157	9.74
					180	252.0	40.0	17	4.0	
340,000	500,000	183	177	HJ2338	7.480	10.433	1.634	.709	.197	11.1
					190	265.0	41.5	18	5.0	
340,000	505,000	210	204	HJ2340	7.874	11.024	1.752	.709	.197	12.7
					200	280.0	44.5	18	5.0	

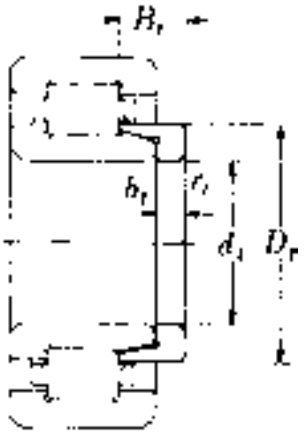

NH23=NJ23+HJ23

These figures may vary slightly according to cage type and type of bearing.

SERIES
NN30
NN30K

PRECISION AND SUPER PRECISION GRADE

Suffix P5
• AFBMA RBEC 5 •
• ISO Class 5 •

Units: **INCHES**
Millimeters

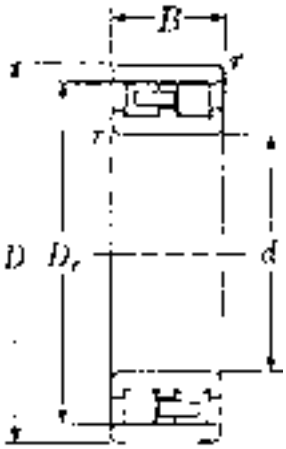

Cylindrical Bore NN30

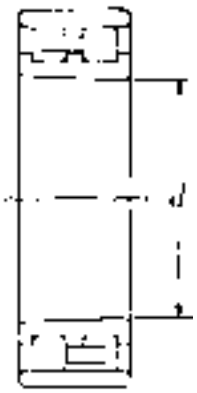

Tapered Bore NN30K Taper 1:12

DOUBLE ROW CYLINDRICAL ROLLER BEARINGS

Bearing No.		Bore	O.D.	Width	Fillet Radius	Outer Ring I.D.	Basic Load Ratings (lbs)		Weight (lbs)	
NN30	*NN30K*	*d*	*D*	*B*	*r*	D_r	*Dynamic C*	*Static* C_0	*NN30*	*NN30K*
NN3005	**NN3005K**	**.9843**	**1.8504**	**.6299**	**.024**	**1.6260**	**5,800**	**6,750**	**.271**	**.262**
		25	47	16	.6	41.3				
NN3006	**NN3006K**	**1.1811**	**2.1654**	**.7480**	**.039**	**1.9094**	**6,900**	**8,350**	**.439**	**.425**
		30	55	19	1.0	48.5				
NN3007	**NN3007K**	**1.3780**	**2.4409**	**.7874**	**.039**	**2.1654**	**8,500**	**10,700**	**.569**	**.553**
		35	62	20	1.0	55.0				
NN3008	**NN3008K**	**1.5748**	**2.6772**	**.8268**	**.039**	**2.4016**	**9,750**	**12,500**	**.688**	**.668**
		40	68	21	1.0	61.0				
NN3009	**NN3009K**	**1.7717**	**2.9528**	**.9055**	**.039**	**2.6575**	**11,600**	**15,400**	**.893**	**.866**
		45	75	23	1.0	67.5				
NN3010	**NN3010K**	**1.9685**	**3.1496**	**.9055**	**.039**	**2.8543**	**11,900**	**16,300**	**1.00**	**.970**
		50	80	23	1.0	72.5				
NN3011	**NN3011K**	**2.1654**	**3.5433**	**1.0236**	**.059**	**3.1890**	**15,600**	**21,700**	**1.44**	**1.39**
		55	90	26	1.5	81.0				
NN3012	**NN3012K**	**2.3622**	**3.7402**	**1.0236**	**.059**	**3.3898**	**16,000**	**22,900**	**1.55**	**1.51**
		60	95	26	1.5	86.1				
NN3013	**NN3013K**	**2.5591**	**3.9370**	**1.0236**	**.059**	**3.5827**	**16,800**	**25,000**	**1.67**	**1.62**
		65	100	26	1.5	91.0				
NN3014	**NN3014K**	**2.7559**	**4.3307**	**1.1811**	**.059**	**3.9370**	**21,300**	**32,000**	**2.29**	**2.25**
		70	110	30	1.5	100.0				
NN3015	**NN3015K**	**2.9528**	**4.5276**	**1.1811**	**.059**	**4.1339**	**21,700**	**33,500**	**2.51**	**2.45**
		75	115	30	1.5	105.0				
NN3016	**NN3016K**	**3.1496**	**4.9213**	**1.3386**	**.059**	**4.4488**	**26,000**	**40,000**	**3.35**	**3.24**
		80	125	34	1.5	113.0				
NN3017	**NN3017K**	**3.3465**	**5.1181**	**1.3386**	**.059**	**4.6457**	**27,400**	**43,500**	**3.55**	**3.44**
		85	130	34	1.5	118.0				
NN3018	**NN3018K**	**3.5433**	**5.5118**	**1.4567**	**.079**	**5.0000**	**32,000**	**51,000**	**4.56**	**4.43**
		90	140	37	2.0	127.0				
NN3019	**NN3019K**	**3.7402**	**5.7087**	**1.4567**	**.079**	**5.1969**	**33,000**	**53,500**	**4.78**	**4.63**
		95	145	37	2.0	132.0				
NN3020	**NN3020K**	**3.9370**	**5.9055**	**1.4567**	**.079**	**5.3937**	**34,500**	**57,500**	**4.98**	**4.83**
		100	150	37	2.0	137.0				
NN3021	**NN3021K**	**4.1339**	**6.2992**	**1.6142**	**.098**	**5.7480**	**44,500**	**72,500**	**6.37**	**6.17**
		105	160	41	2.5	146.0				
NN3022	**NN3022K**	**4.3307**	**6.6929**	**1.7717**	**.098**	**6.1024**	**51,500**	**84,500**	**8.11**	**7.85**
		110	170	45	2.5	155.0				
NN3024	**NN3024K**	**4.7244**	**7.0866**	**1.8110**	**.098**	**6.4961**	**52,500**	**88,000**	**8.77**	**8.49**
		120	180	46	2.5	165.0				
NN3026	**NN3026K**	**5.1181**	**7.8740**	**2.0472**	**.098**	**7.1654**	**64,000**	**107,000**	**13.1**	**12.7**
		130	200	52	2.5	182.0				
NN3028	**NN3028K**	**5.5118**	**8.2677**	**2.0866**	**.098**	**7.5591**	**67,000**	**116,000**	**14.2**	**13.8**
		140	210	53	2.5	192.0				
NN3030	**NN3030K**	**5.9055**	**8.8583**	**2.2047**	**.098**	**8.1102**	**75,000**	**132,000**	**17.2**	**16.7**
		150	225	56	2.5	206.0				
NN3032	**NN3032K**	**6.2992**	**9.4488**	**2.3622**	**.098**	**8.6220**	**84,000**	**149,000**	**19.7**	**19.0**
		160	240	60	2.5	219.0				
NN3034	**NN3034K**	**6.6929**	**10.2362**	**2.6378**	**.098**	**9.2913**	**99,000**	**174,000**	**27.8**	**26.9**
		170	260	67	2.5	236.0				
NN3036	**NN3036K**	**7.0866**	**11.0236**	**2.9134**	**.098**	**10.0394**	**127,000**	**224,000**	**36.6**	**35.5**
		180	280	74	2.5	255.0				
NN3038	**NN3038K**	**7.4803**	**11.4173**	**2.9528**	**.098**	**10.4331**	**130,000**	**233,000**	**38.6**	**37.5**
		190	290	75	2.5	265.0				
NN3040	**NN3040K**	**7.8740**	**12.2047**	**3.2283**	**.098**	**11.1024**	**147,000**	**262,000**	**47.6**	**47.2**
		200	310	82	2.5	282.0				
NN3044	**NN3044K**	**8.6614**	**13.3858**	**3.5433**	**.118**	**12.2047**	**183,000**	**330,000**	**64.6**	**62.6**
		220	340	90	3.0	310.0				
NN3048	**NN3048K**	**9.4488**	**14.1732**	**3.6220**	**.118**	**12.9921**	**192,000**	**360,000**	**72.3**	**70.1**
		240	360	92	2.0	330.0				
NN3052	**NN3052K**	**10.2362**	**15.7480**	**4.0945**	**.157**	**14.3307**	**239,000**	**450,000**	**104**	**101**
		260	400	104	4.0	364.0				
NN3056	**NN3056K**	**11.0236**	**16.5354**	**4.1732**	**.157**	**15.1181**	**243,000**	**465,000**	**113**	**109**
		280	420	106	4.0	384.0				
NN3060	**NN3060K**	**11.8110**	**18.1102**	**4.6457**	**.157**	**16.4567**	**299,000**	**575,000**	**156**	**151**
		300	460	118	4.0	418.0				
NN3064	**NN3064K**	**12.5984**	**18.8976**	**4.7638**	**.157**	**17.2441**	**305,000**	**600,000**	**168**	**163**
		320	480	121	4.0	438.0				

Note: The d dimension for the tapered bore is measured from the side of the bearing with the smallest bore dimension.

TAPERED ROLLER BEARING NUMBERING SYSTEM

Inch Series

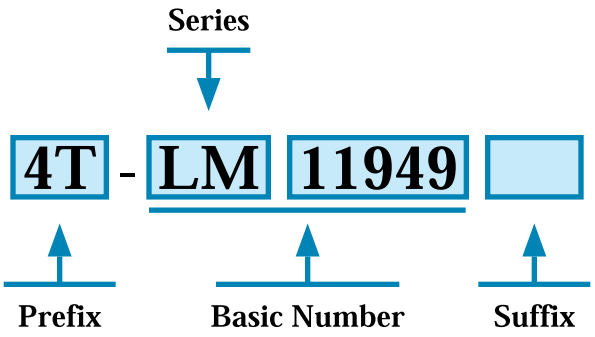

ISO Series

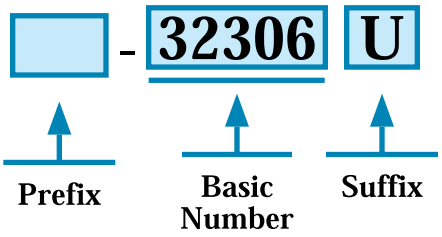

1. PREFIX

ET:	NTN Endurance tapered roller bearings, case hardened material
4T:	NTN 4-Top tapered roller bearings, case hardened material
E:	Case hardened steel
T:	Internationally interchangeable dimensions

2. SERIES

H:	Heavy
HH:	Heavier than heavy
HM:	Heavy-medium
L:	Light
LM:	Light medium
M:	Medium
ISO:	Metric series 320X, 302, 322, 303 and 323

3. SUFFIX

A:	Different bore, O.D., width or radius from basic part number
PK:	Class K for J-Line
PXn:	Special tolerance, n; from 1 onward
S:	Different bore, OD, width or radius from basic part number
U:	ISO series; internationally interchangeable through hardened steel
W:	Slot or keyway
X:	Different bore, O.D., width or radius from basic part number
-0:	AFBMA class 0
-00:	AFBMA class 00
-2:	AFBMA class 2
-3:	AFBMA class 3
-4:	AFBMA class 4

NTN

SERIES 4T

Units: **INCHES**
Millimeters

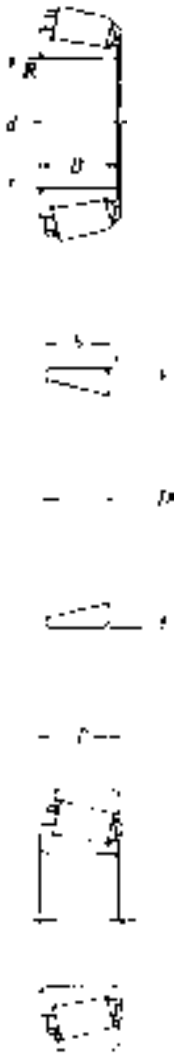

TAPERED ROLLER BEARINGS

Cone Number	Bore *d*	Cone Width *B*	Max. shaft fillet radius *R*	Cup Number	O.D. *D*	Cup Width *b*	Max. housing fillet radius *r*	Overall Width *T*
4T-335 SERIES								
4T-335	**1.3750**	**.8820**	**.03**	**4T-332**	**3.1496**	**.7018**	**.05**	**.8268**
	34.925	22.403	.6		80.000	17.826	1.3	21.000
4T-336	**1.6250**	**.8820**	**.03**	**4T-332A**	**3.1496**	**.8268**	**.09**	**.9518**
	41.275	22.403	.6		80.000	21.000	2.3	24.176
4T-339	**1.3780**	**.8820**	**.03**					
	35.000	22.403	.6					
4T-342	**1.6250**	**.8820**	**.14**					
	41.275	22.403	2.5					
4T-342A	**1.6250**	**1.1802**	**.14**					
	41.275	29.977	2.5					
4T-342S	**1.6880**	**.8820**	**.14**					
	42.875	22.403	2.5					
4T-344A	**1.5748**	**.8820**	**.03**					
	40.000	22.403	.6					
4T-355 SERIES								
4T-355	**1.7500**	**.8540**	**.09**	**4T-352**	**3.5480**	**.8586**	**.09**	**.9055**
	44.450	21.692	2.3		90.119	21.808	2.3	23.000
4T-355X	**1.7500**	**.8540**	**.14**	**4T-354A**	**3.3465**	**.6875**	**.05**	**.8125**
	44.450	21.692	2.5		85.000	17.462	1.3	20.638
4T-359A	**1.8125**	**.8540**	**.14**	**4T-354X**	**3.3465**	**.6875**	**.06**	**.8125**
	46.038	21.692	2.5		85.000	17.462	1.5	20.638
4T-359S	**1.8125**	**.8540**	**.09**					
	46.038	21.692	2.3					
4T-365 SERIES								
4T-366	**1.9685**	**.8750**	**.09**	**4T-362**	**3.5433**	**.6250**	**.08**	**.7874**
	50.000	22.225	2.3		90.000	15.875	2.0	20.000
4T-368	**2.0000**	**.8750**	**.06**	**4T-362A**	**3.5000**	**.6501**	**.05**	**.8125**
	50.800	22.225	1.0		88.900	16.513	1.3	20.638
4T-368A	**2.0000**	**.8750**	**.14**	**4T-363**	**3.5433**	**.7874**	**.03**	**.7874**
	50.800	22.225	2.5		90.000	20.000	.8	20.000
4T-368S	**2.0312**	**.8750**	**.08**					
	51.592	22.225	1.5					
4T-369A	**1.8750**	**.8750**	**.14**					
	47.625	22.225	2.5					
4T-369S	**1.8750**	**.8750**	**.09**					
	47.625	22.225	2.3					
4T-370A	**2.0000**	**.8750**	**.20**					
	50.800	22.225	4.0					
4T-385 SERIES								
4T-385	**2.1654**	**.8640**	**.09**	**4T-382**	**3.8750**	**.7018**	**.03**	**.8268**
	55.000	21.946	2.3		98.425	17.826	.8	21.000
*** 4T-385A**	**2.0000**	**.8640**	**.09**	**4T-382A**	**3.8125**	**.6250**	**.03**	**.8268**
	50.800	21.946	2.3		96.838	15.875	.8	21.000
4T-385X	**2.1654**	**.8640**	**.14**	**4T-382S**	**3.8125**	**.7982**	**.09**	**1.0000**
	55.000	21.946	2.5		96.838	20.275	2.3	25.400
4T-386A	**1.8750**	**.8640**	**.03**	**4T-383A**	**3.9370**	**.7018**	**.08**	**.8268**
	47.625	21.946	.6		100.000	17.826	2.0	21.000
4T-387	**2.2500**	**.8640**	**.09**					
	57.150	21.946	2.3					
4T-387A	**2.2500**	**.8640**	**.14**					
	57.150	21.946	2.5					
4T-387AS	**2.2500**	**.8640**	**.20**					
	57.150	21.946	4.0					
4T-387S	**2.2500**	**.8640**	**.03**					
	57.150	21.946	.6					
4Y-388A	**2.2650**	**.8640**	**.14**					
	57.531	21.946	2.5					
4T-389A	**2.1250**	**.8640**	**.03**					
	53.975	21.946	.6					
4T-395 SERIES								
4T-390	**2.2500**	**.8660**	**.09**	**4T-393**	**4.3307**	**1.0630**	**.03**	**1.0630**
	57.150	21.996	2.3		110.000	27.000	.8	27.000
4T-395	**2.5000**	**.8660**	**.14**	**4T-394A**	**4.3307**	**.7411**	**.05**	**.8661**
	63.500	21.996	2.5		110.000	18.824	1.3	22.000
4T-395A	**2.6250**	**.8660**	**.03**	**4T-394AS**	**4.3307**	**.7411**	**.13**	**.8661**
	66.675	21.996	.6		110.000	18.824	3.3	22.000
4T-395S	**2.6250**	**.8660**	**.14**					
	66.675	21.996	2.5					
*** 4T-396**	**1.9685**	**.8660**	**.03**					
	50.000	21.996	.6					
4T-399A	**2.6875**	**.8660**	**.09**					
	68.262	21.996	2.3					
4T-399AS	**2.6875**	**.8660**	**.20**					
	68.262	21.996	4.0					

These maximum fillet radii will be cleared by the cone or cup radii.

* 0.6 in. (1.5 mm) front radius

TAPERED ROLLER BEARINGS

Units: **INCHES**
Millimeters

NTN
SERIES 4T

Cone Number	Bore *d*	Cone Width *B*	Max. shaft fillet radius *R*	Cup Number	O.D. *D*	Cup Width *b*	Max. housing fillet radius *r*	Overall Width *T*
4T-415 SERIES								
4T-418	**1.5000**	**1.1450**	**.14**	**4T-412**	**3.2500**	**1.1875**	**.13**	**1.3750**
	38.100	29.083	2.5		82.550	30.162	3.3	34.925
4T-420	**1.5748**	**1.1450**	**.14**	**4T-414**	**3.4843**	**.8750**	**.06**	**1.0625**
	40.000	29.083	2.5		88.500	22.225	1.5	26.988
4T-435 SERIES								
4T-438	**1.7500**	**1.1772**	**.14**	**4T-432A**	**3.7500**	**.8750**	**.03**	**1.0938**
	44.450	29.901	2.5		95.250	22.225	.8	27.783
4T-443	**1.2500**	**1.1772**	**.03**					
	31.750	29.901	.6					
4T-455 SERIES								
4T-455	**2.0000**	**1.1542**	**.03**	**4T-453**	**4.2500**	**1.0630**	**.03**	**1.0943**
	50.800	29.317	.6		107.950	27.000	.8	27.795
4T-461	**1.6870**	**1.1542**	**.03**	**4T-453A**	**4.2500**	**.8750**	**.03**	**1.0938**
	42.850	29.317	.6		107.950	22.225	.8	27.783
4T-462	**2.2500**	**1.1542**	**.09**	**4T-453X**	**4.1250**	**.9687**	**.13**	**1.1875**
	57.150	29.317	2.3		104.775	24.605	3.3	30.162
4T-467	**1.8750**	**1.1542**	**.03**	**4T-454**	**4.3307**	**1.0630**	**.08**	**1.0943**
	47.625	29.317	.6		110.000	27.000	2.0	27.795
4T-469	**2.2500**	**1.1542**	**.14**					
	57.150	29.317	2.5					
4T-475 SERIES								
4T-480	**2.6875**	**1.1420**	**.14**	**4T-472**	**4.7244**	**.9542**	**.08**	**1.1730**
	68.262	29.007	2.5		120.000	24.237	2.0	29.794
4T-482	**2.7500**	**1.1420**	**.14**	**4T-472A**	**4.7244**	**.9230**	**.13**	**1.1418**
	69.850	29.007	2.5		120.000	23.444	3.3	29.002
4T-483	**2.5000**	**1.1420**	**.14**	**4T-472X**	**4.8750**	**.9687**	**.13**	**1.1875**
	63.500	29.007	2.5		123.825	24.605	3.3	30.162
4T-484	**2.7559**	**1.1420**	**.08**					
	70.000	29.007	1.5					
4T-495 SERIES								
4T-495	**3.2500**	**1.1720**	**.14**					
	82.550	29.769	2.5					
4T-495A	**3.0000**	**1.1720**	**.14**	**4T-492A**	**5.2500**	**.8750**	**.13**	**1.1875**
	76.200	29.769	2.5		133.350	22.225	3.3	30.162
4T-495AX	**3.0000**	**1.1720**	**.25**	**4T-493**	**5.3750**	**.8750**	**.13**	**1.1875**
	76.200	29.769	6.4		136.525	22.225	3.3	30.162
4T-496	**3.1875**	**1.1720**	**.14**					
	80.962	29.769	2.5					
4T-497	**3.3750**	**1.1720**	**.14**					
	85.725	29.769	2.5					
4T-498	**3.3125**	**1.1720**	**.14**					
	84.138	29.769	2.5					
4T-525 SERIES								
4T-526	**1.6250**	**1.4200**	**.14**	**4T-522**	**4.0000**	**1.0625**	**.13**	**1.3750**
	41.275	36.068	2.5		101.600	26.988	3.3	34.925
4T-527	**1.7500**	**1.4200**	**.14**					
	44.450	36.068	2.5					
4T-528	**1.8750**	**1.4200**	**.14**					
	47.625	36.068	2.5					
4T-529	**2.0000**	**1.4200**	**.03**					
	50.800	36.068	.6					
4T-535 SERIES								
4T-535	**1.7500**	**1.4550**	**.14**	**4T-532A**	**4.3750**	**1.1875**	**.13**	**1.5000**
	44.450	36.957	2.5		111.125	30.162	3.3	38.100
4T-536	**1.8750**	**1.4550**	**.14**	**4T-532X**	**4.2500**	**1.1250**	**.13**	**1.4375**
	47.625	36.957	2.5		107.950	28.575	3.3	36.512
4T-537	**2.0000**	**1.4550**	**.14**					
	50.800	36.957	2.5					
4T-539	**2.1250**	**1.4550**	**.14**					
	53.975	36.957	2.5					
4T-539A	**2.1250**	**1.4550**	**.22**					
	53.975	36.957	5.5					
4T-543	**1.5748**	**1.4550**	**.14**					
	40.000	36.957	2.5					

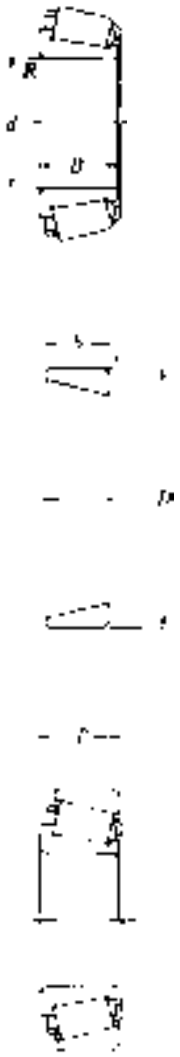

These maximum fillet radii will be cleared by the cone or cup radii.

NTN

SERIES 4T

Units: **INCHES**
Millimeters

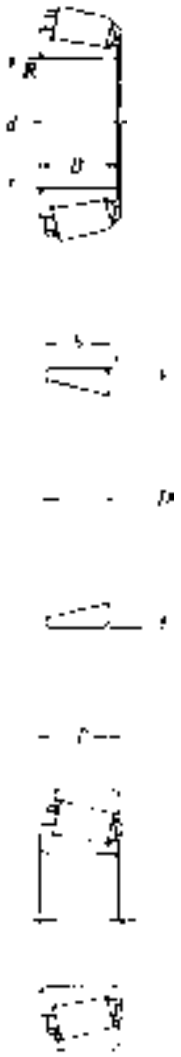

TAPERED ROLLER BEARINGS

Cone Number	Bore *d*	Cone Width *B*	Max. shaft fillet radius *R*	Cup Number	O.D. *D*	Cup Width *b*	Max. housing fillet radius *r*	Overall Width *T*
4T-555 SERIES								
4T-555S	**2.2500**	**1.4440**	**.14**	**4T-552**	**4.8750**	**1.3125**	**.13**	**1.5000**
	57.150	36.678	2.5		123.825	33.338	3.3	38.100
4T-557A	**2.3750**	**1.4440**	**.31**	**4T-552A**	**4.8750**	**1.1875**	**.13**	**1.5000**
	60.325	36.678	6.0		123.825	30.162	3.3	38.100
4T-557S	**2.1250**	**1.4440**	**.14**	**4T-553A**	**4.9213**	**1.1875**	**.13**	**1.5000**
	53.975	36.678	2.5		125.000	30.162	3.3	38.100
4T-559	**2.5000**	**1.4440**	**.14**	**4T-553X**	**4.8125**	**1.1875**	**.13**	**1.5000**
	63.500	36.678	2.5		122.238	30.162	3.3	38.100
4T-560	**2.6250**	**1.4440**	**.14**					
	66.675	36.678	2.5					
4T-565 SERIES								
4T-567	**2.8750**	**1.4240**	**.14**	**4T-563**	**5.0000**	**1.1250**	**.13**	**1.4375**
	73.025	36.170	2.5		127.000	28.575	3.3	36.512
4T-575 SERIES								
4T-575	**3.0000**	**1.4212**	**.14**	**4T-572**	**5.5115**	**1.1250**	**.13**	**1.4375**
	76.200	36.098	2.5		139.992	28.575	3.3	36.513
4T-575S	**3.0000**	**1.4212**	**.27**	**4T-572X**	**5.5000**	**1.1250**	**.13**	**1.4375**
	76.200	36.098	6.8		139.700	28.575	3.3	36.513
4T-576	**2.8750**	**1.4212**	**.14**					
	73.025	36.098	2.5					
4T-577	**2.9375**	**1.4212**	**.14**					
	74.612	36.098	2.5					
4T-580	**3.2500**	**1.4212**	**.14**					
	82.550	36.098	2.5					
4T-581	**3.1875**	**1.4212**	**.14**					
	80.962	36.098	2.5					
4T-582	**3.2500**	**1.4212**	**.27**					
	82.550	36.098	6.8					
4T-595 SERIES								
4T-593	**3.5000**	**1.4300**	**.14**	**4T-592**	**6.0000**	**1.3125**	**.13**	**1.5625**
	88.900	36.322	3.5		152.400	33.338	3.3	39.688
4T-593A	**3.5000**	**1.4300**	**.25**	**4T-592A**	**6.0000**	**1.1875**	**.13**	**1.5625**
	88.900	36.322	6.4		152.400	30.162	3.3	39.688
4T-594	**3.7500**	**1.4300**	**.14**	**4T-592XS**	**5.8125**	**1.0312**	**.13**	**1.4062**
	95.250	36.322	3.5		147.638	26.192	3.3	35.717
4T-594A	**3.7500**	**1.4300**	**.20**					
	95.250	36.322	4.0					
4T-595	**3.2500**	**1.4300**	**.14**					
	82.550	36.322	3.5					
4T-596	**3.3750**	**1.4300**	**.14**					
	85.723	36.322	3.5					
4T-598	**3.6250**	**1.4300**	**.14**					
	92.075	36.322	3.5					
4T-598A	**3.6250**	**1.4300**	**.25**					
	92.075	36.322	6.4					
4T-615 SERIES								
4T-620	**1.5625**	**1.6250**	**.03**	**4T-612**	**4.7500**	**1.2500**	**.13**	**1.6250**
	39.688	41.275	.6		120.650	31.750	3.3	41.275
4T-621	**2.1250**	**1.6250**	**.14**					
	53.975	41.275	3.5					
4T-623	**2.2500**	**1.6250**	**.14**					
	57.150	41.275	3.5					
4T-635 SERIES								
4T-635	**2.2500**	**1.6250**	**.14**	**4T-632**	**5.3750**	**1.2500**	**.13**	**1.6250**
	57.150	41.275	2.5		136.525	31.750	3.3	41.275
4T-639	**2.5000**	**1.6250**	**.14**	**4T-633**	**5.1250**	**1.2500**	**.13**	**1.6250**
	63.500	41.275	2.5		130.175	31.750	3.3	41.275
4T-643	**2.7500**	**1.6250**	**.14**					
	69.850	41.275	2.5					
4T-645	**2.8125**	**1.6250**	**.25**					
	71.438	41.275	6.4					

These maximum fillet radii will be cleared by the cone or cup radii.

TAPERED ROLLER BEARINGS

Units: **INCHES**
Millimeters

NTN
SERIES 4T

Cone Number	Bore *d*	Cone Width *B*	Max. shaft fillet radius *R*	Cup Number	O.D. *D*	Cup Width *b*	Max. housing fillet radius *r*	Overall Width *T*
4T-655 SERIES								
4T-659	**3.0000**	**1.6250**	**.14**	**4T-652**	**6.0000**	**1.2500**	**.13**	**1.6250**
	76.200	41.275	2.5		152.400	31.750	3.3	41.275
4T-665	**3.3750**	**1.6250**	**.14**					
	85.725	41.275	2.5					
4T-665A	**3.3750**	**1.6250**	**.25**					
	85.725	41.275	6.4					
4T-662	**3.1875**	**1.5000**	**.14**	**4T-652**	**6.0000**	**1.2500**	**.13**	**1.5000**
	80.962	38.100	2.5		152.400	31.750	3.3	38.100
				4T-653	**5.7500**	**1.2500**	**.13**	**1.5000**
					146.050	31.750	3.3	38.100
4T-675 SERIES								
4T-681	**3.6250**	**1.6250**	**.14**	**4T-672**	**6.6250**	**1.1875**	**.13**	**1.6250**
	92.075	41.275	2.5		168.275	30.162	3.3	41.275
4T-681A	**3.6250**	**1.6250**	**.25**					
	92.075	41.275	6.4					
4T-683	**3.7500**	**1.6250**	**.14**					
	95.250	41.275	2.5					
4T-683XA	**3.7500**	**1.6250**	**.20**					
	95.250	41.275	4.0					
4T-685	**3.8750**	**1.6250**	**.14**					
	98.425	41.275	2.5					
4T-687	**4.0000**	**1.6250**	**.14**					
	101.600	41.275	2.5					
4T-745 SERIES								
4T-745A	**2.7500**	**1.8375**	**.14**	**4T-742**	**5.9090**	**1.4375**	**.13**	**1.7500**
	69.850	46.672	2.5		150.089	36.512	3.3	44.450
4T-748	**3.1496**	**1.8375**	**.12**	**4T-743**	**5.9055**	**1.3780**	**.13**	**1.7502**
	80.000	46.672	2.5		150.000	35.000	3.3	44.455
4T-749	**3.3475**	**1.8375**	**.14**					
	85.026	46.672	2.5					
4T-749A	**3.2500**	**1.8375**	**.14**					
	82.550	46.672	2.5					
4T-749S	**3.3475**	**1.8375**	**.20**					
	85.026	46.672	4.0					
4T-750A	**3.2500**	**1.8375**	**.27**					
	82.550	46.672	6.8					
4T-755 SERIES								
4T-756A	**3.1250**	**1.9000**	**.31**	**4T-752**	**6.3750**	**1.5000**	**.13**	**1.8750**
	79.375	48.260	6.0		161.925	38.100	3.3	47.625
4T-759	**3.5000**	**1.9000**	**.14**					
	88.900	48.260	2.5					
4T-760	**3.5625**	**1.9000**	**.14**					
	90.488	48.260	2.5					
4T-766	**3.5000**	**1.9000**	**.28**					
	88.900	48.260	7.0					
4T-795 SERIES								
4T-797	**5.1181**	**1.8750**	**.14**	**4T-792**	**8.1250**	**1.3750**	**.13**	**1.8750**
	130.000	47.625	2.5		206.375	34.925	3.3	47.625
4T-855 SERIES								
4T-855	**3.5000**	**2.2650**	**.31**	**4T-854**	**7.5000**	**1.7500**	**.13**	**2.2500**
	88.900	57.531	6.0		190.500	44.450	3.3	57.150
4T-857	**3.6250**	**2.2650**	**.31**					
	92.075	57.531	6.0					
4T-861	**4.0000**	**2.2650**	**.31**					
	101.600	57.531	6.0					
4T-864	**3.7500**	**2.2650**	**.31**					
	95.250	57.531	6.0					
4T-866	**3.8750**	**2.2650**	**.14**					
	98.425	57.531	2.5					
4T-869	**3.4375**	**2.2650**	**.31**					
	87.312	57.531	6.0					
4T-935 SERIES								
4T-936	**4.2500**	**2.6250**	**.31**	**4T-932**	**8.3750**	**2.1250**	**.13**	**2.6250**
	107.950	66.675	6.0		212.725	53.975	3.3	66.675
4T-938	**4.5000**	**2.6250**	**.28**					
	114.300	66.675	7.0					

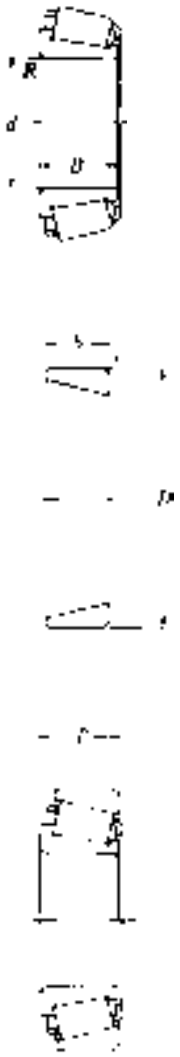

These maximum fillet radii will be cleared by the cone or cup radii.

NTN

SERIES 4T

Units: **INCHES**
Millimeters

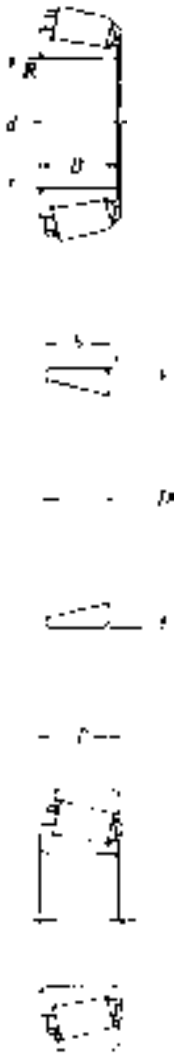

TAPERED ROLLER BEARINGS

Cone Number	Bore *d*	Cone Width *B*	Max. shaft fillet radius *R*	Cup Number	O.D. *D*	Cup Width *b*	Max. housing fillet radius *r*	Overall Width *T*
4T-1300 SERIES								
4T-1380	**.8750**	**.7940**	**.06**	**4T-1328**	**2.0625**	**.5625**	**.06**	**.7625**
	22.225	20.168	1.0		52.388	14.288	1.5	19.368
4T-1700 SERIES								
4T-1755	**.8750**	**.7810**	**.05**	**4T-1729**	**2.2400**	**.6250**	**.05**	**.7625**
	22.225	19.837	1.3		56.896	15.875	1.3	19.368
4T-1779	**.9375**	**.7810**	**.03**	**4T-1729X**	**2.2400**	**.6250**	**.06**	**.7625**
	23.812	19.837	.6		56.896	15.875	1.5	19.368
4T-1780	**1.0000**	**.7810**	**.03**					
	25.400	19.837	.6					
4T-1900 SERIES								
4T-1986	**1.0000**	**.7620**	**.05**	**4T-1922**	**2.2500**	**.6250**	**.06**	**.7813**
	25.400	19.355	1.3		57.150	15.875	1.5	19.845
4T-1988	**1.1250**	**.7620**	**.14**					
	28.575	19.355	2.5					
4T-2500 SERIES								
4T-2580	**1.2500**	**.9983**	**.03**	**4T-2523**	**2.7500**	**.7500**	**.05**	**.9375**
	31.750	25.357	.8		69.850	19.050	1.3	23.812
4T-2585	**1.3125**	**.9983**	**.14**					
	33.338	25.357	2.5					
4T-2600 SERIES								
4T-2690	**1.1562**	**1.0013**	**.14**	**4T-2631**	**2.6150**	**.7500**	**.05**	**.9375**
	29.367	25.433	2.5		66.421	19.050	1.3	23.812
4T-2700 SERIES								
4T-2776	**1.5000**	**1.0100**	**.17**	**4T-2720**	**3.0000**	**.7500**	**.13**	**.9375**
	38.100	25.654	4.3		76.200	19.050	3.3	23.812
4T-2777	**1.5000**	**1.0100**	**.22**	**4T-2729**	**3.0000**	**.7500**	**.03**	**.9375**
	38.100	25.654	5.5		76.200	19.050	.8	23.812
4T-2780	**1.4365**	**1.0100**	**.06**	**4T-2735X**	**2.8750**	**.7500**	**.03**	**.9375**
	36.487	25.654	1.5		73.025	19.050	.8	23.812
4T-2788	**1.5000**	**1.0100**	**.14**					
	38.100	25.654	2.5					
4T-2789	**1.5625**	**1.0100**	**.14**					
	39.688	25.654	2.5					
4T-2790	**1.3125**	**1.0100**	**.06**					
	33.338	25.654	1.0					
4T-2793	**1.3750**	**1.0100**	**.03**					
	34.925	25.654	.6					
4T-2794	**1.4365**	**1.0100**	**.14**					
	36.487	25.654	2.5					
4T-2796	**1.3750**	**1.0100**	**.14**					
	34.925	25.654	2.5					
4T-2900 SERIES								
4T-2984	**1.8125**	**1.0082**	**.14**	**4T-2924**	**3.3464**	**.8125**	**.05**	**1.0000**
	46.038	25.608	2.5		85.000	20.637	1.3	25.400
4T-3100 SERIES								
4T-3193	**1.2500**	**1.1810**	**.14**	**4T-3120**	**2.8593**	**.9375**	**.13**	**1.1875**
	31.750	29.997	2.5		72.626	23.812	3.3	30.162
4T-3196	**1.3125**	**1.1810**	**.14**					
	33.338	29.997	2.5					
4T-3300 SERIES								
4T-3379	**1.3750**	**1.1965**	**.14**	**4T-3320**	**3.1562**	**.9375**	**.13**	**1.1563**
	34.925	30.391	2.5		80.167	23.812	3.3	29.370
4T-3384	**1.6250**	**1.1965**	**.03**	**4T-3325**	***3.1496**	**.9375**	**.13**	**1.1563**
	41.275	30.391	.6		80.000	23.812	3.3	29.370
4T-3386	**1.5625**	**1.1965**	**.03**					
	39.688	30.391	.6					
4T-3400 SERIES								
4T-3478	**1.3750**	**1.1721**	**.14**	**4T-3420**	**3.1250**	**.9375**	**.13**	**1.1563**
	34.925	29.771	2.5		79.375	23.812	3.3	29.370
4T-3479	**1.4375**	**1.1721**	**.03**					
	36.512	29.771	.6					
4T-3482	**1.3750**	**1.1721**	**.03**					
	34.925	29.771	.6					
4T-3490	**1.5000**	**1.1721**	**.14**					
	38.100	29.771	2 .5					

These maximum fillet radii will be cleared by the cone or cup radii.

* Tolerance +.0000 to -.0010 in (+0 to -.025 mm)

www.precise-rotation.ru

TAPERED ROLLER BEARINGS

Units: **INCHES**
Millimeters

NTN
SERIES 4T

Cone Number	Bore d	Cone Width B	Max. shaft fillet radius R	Cup Number	O.D. D	Cup Width b	Max. housing fillet radius r	Overall Width T
4T-3500 SERIES								
4T-3578	**1.7500**	**1.2160**	**.14**	**4T-3520**	**3.3125**	**.9375**	**.13**	**1.1875**
	44.450	30.886	2.5		84.138	23.812	3.3	30.162
4T-3578A	**1.7500**	**1.2160**	**.22**	**4T-3525**	**3.4375**	**.9375**	**.13**	**1.1875**
	44.450	30.886	5.5		87.312	23.812	3.3	30.162
4T-3580	**1.5000**	**1.2160**	**.06**					
	38.100	30.886	1.0					
4T-3585	**1.6250**	**1.2160**	**.06**					
	41.275	30.886	1.0					
4T-3586	**1.7810**	**1.2160**	**.14**					
	45.237	30.886	2.5					
4T-3700 SERIES								
4T-3767	**2.0625**	**1.1930**	**.09**	**4T-3720**	**3.6718**	**.9375**	**.13**	**1.1875**
	52.388	30.302	2.3		93.264	23.812	3.3	30.162
4T-3775	**2.0000**	**1.1930**	**.03**	**4T-3730**	**3.6718**	**.9375**	**.03**	**1.1875**
	50.800	30.302	.6		93.264	23.812	.8	30.162
4T-3776	**1.7710**	**1.1930**	**.14**					
	44.983	30.302	2.5					
4T-3778	**1.8750**	**1.1930**	**.25**					
	47.625	30.302	6.4					
4T-3779	**1.8750**	**1.1930**	**.14**					
	47.625	30.302	2.5					
4T-3780	**2.0000**	**1.1930**	**.14**					
	50.800	30.302	2.5					
4T-3781	**1.9375**	**1.1930**	**.14**					
	49.212	30.302	2.5					
4T-3782	**1.7500**	**1.1930**	**.14**					
	44.450	30.302	2.5					
4T-3783	**1.7500**	**1.1930**	**.25**					
	44.450	30.302	6.4					
4T-3784	**2.0000**	**1.1930**	**.25**					
	50.800	30.302	6.4					
4T-3795	**2.0000**	**1.1930**	**.14**					
	50.800	30.302	2.5					
4T-3800 SERIES								
4T-3872	**1.3750**	**1.1875**	**.14**	**4T-3820**	**3.3750**	**.9375**	**.13**	**1.1875**
	34.925	30.162	2.5		85.725	23.812	3.3	30.162
4T-3872A	**1.3750**	**1.1875**	**.03**					
	34.925	30.162	.6					
4T-3877	**1.6250**	**1.1875**	**.14**					
	41.275	30.162	2.5					
4T-3880	**1.6250**	**1.1875**	**.03**					
	41.275	30.162	.6					
4T-3900 SERIES								
4T-3979	**2.2500**	**1.1830**	**.14**	**4T-3920**	**4.4375**	**.9375**	**.13**	**1.1875**
	57.150	30.048	2.5		112.712	23.812	3.3	30.162
4T-3982	**2.5000**	**1.1830**	**.14**	**4T-3925**	**4.4375**	**.9375**	**.03**	**1.1875**
	63.500	30.048	2.5		112.712	23.812	.8	30.162
4T-3984	**2.6250**	**1.1830**	**.14**					
	66.675	30.048	2.5					
4T-3994	**2.6250**	**1.1830**	**.22**					
	66.675	30.048	5.5					
4T-4300 SERIES								
4T-4388	**1.6250**	**1.5900**	**.14**	**4T-4335**	**3.5625**	**1.3125**	**.13**	**1.5625**
	41.275	40.386	2.5		90.488	33.338	3.3	39.688
4T-5300 SERIES								
4T-5356	**1.7500**	**1.7510**	**.05**	**4T-5335**	**4.0625**	**1.4375**	**.13**	**1.7188**
	44.450	44.475	1.3		103.188	36.512	3.3	43.658
4T-5358	**1.8750**	**1.7510**	**.05**					
	47.625	44.475	1.3					
4T-5361	**1.8750**	**1.7510**	**.14**					
	47.625	44.475	2.5					
4T-5395	**1.9375**	**1.7510**	**.14**					
	49.212	44.475	2.5					

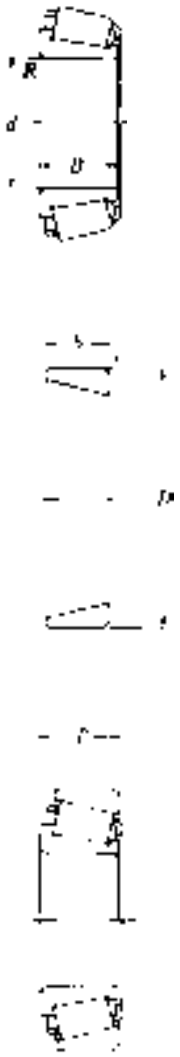

These maximum fillet radii will be cleared by the cone or cup radii.

NTN

SERIES 4T

Units: **INCHES**
Millimeters

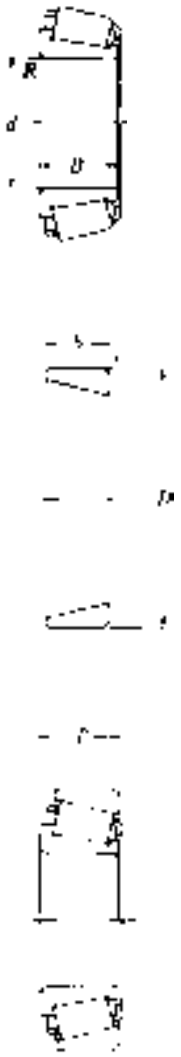

TAPERED ROLLER BEARINGS

Cone Number	Bore *d*	Cone Width *B*	Max. shaft fillet radius *R*	Cup Number	O.D. *D*	Cup Width *b*	Max. housing fillet radius *r*	Overall Width *T*
4T-5500 SERIES								
4T-5562	**1.9375**	**1.7230**	**.05**	**4T-5535**	**4.8125**	**1.4375**	**.13**	**1.7188**
	49.212	43.764	1.3		122.238	36.512	3.3	43.658
4T-5565	**2.0000**	**1.7230**	**.05**					
	50.800	43.764	1.3					
4T-5566	**2.1875**	**1.7230**	**.05**					
	55.562	43.764	1.3					
4T-5578	**2.1250**	**1.7230**	**.14**					
	53.975	43.764	2.5					
4T-5582	**2.3750**	**1.7230**	**.03**					
	60.325	43.764	.6					
4T-5583	**2.3750**	**1.7230**	**.14**					
	60.325	43.764	2.5					
4T-5584	**2.5000**	**1.7230**	**.14**					
	63.500	43.764	2.5					
4T-5595	**2.5938**	**1.7230**	**.14**					
	65.883	43.764	2.5					
4T-5700 SERIES								
4T-5760	**3.0000**	**1.8150**	**.14**	**4T-5735**	**5.3438**	**1.3750**	**.13**	**1.7500**
	76.200	46.100	2.5		135.733	34.925	3.3	44.450
4T-5795	**3.0625**	**1.8150**	**.14**					
	77.788	46.100	2.5					
4T-6300 SERIES								
4T-6361	**2.3622**	**2.2050**	**.12**	**4T-6320**	**5.3447**	**1.7500**	**.13**	**2.1250**
	60.000	56.007	2.5		135.755	44.450	3.3	53.975
4T-6376	**2.3750**	**2.2050**	**.14**					
	60.325	56.007	2.5					
4T-6379	**2.5625**	**2.2050**	**.14**					
	65.088	56.007	2.5					
4T-6381	***2.1649**	**2.2050**	**.14**					
	55.000	56.007	2.5					
4T-6382	**2.5000**	**2.2050**	**.17**					
	63.500	56.007	4.3					
4T-6386	**2.6250**	**2.2050**	**.17**					
	66.675	56.007	4.3					
4T-6389	**2.6250**	**2.2050**	**.25**					
	66.675	56.007	6.4					
4T-6400 SERIES								
4T-6461A	**3.0000**	**2.1350**	**.38**	**4T-6420**	**5.8750**	**1.7500**	**.13**	**2.1250**
	76.200	54.229	9.7		147.225	44.450	3.3	53.975
4T-6500 SERIES								
4T-6559	**3.2500**	**2.1693**	**.14**	**4T-6535**	**6.3750**	**1.6875**	**.13**	**2.1250**
	82.550	55.100	2.5		161.925	42.862	3.3	53.975
4T-6576	**3.0000**	**2.1693**	**.14**					
	76.200	55.100	2.5					
4T-6580	**3.5000**	**2.1693**	**.14**					
	88.900	55.100	2.5					
4T-02400 SERIES								
4T-02474	**1.1250**	**.8750**	**.03**	**4T-02420**	**2.6875**	**.6875**	**.06**	**.8750**
	28.575	22.225	.6		68.262	17.462	1.0	22.225
4T-02475	**1.2500**	**.8750**	**.14**					
	31.750	22.225	2.5					
4T-02800 SERIES								
4T-02872	**1.1250**	**.8750**	**.03**	**4T-02820**	**2.8750**	**.6875**	**.13**	**.8750**
	28.575	22.225	.6		73.025	17.462	3.3	22.225
4T-05000 SERIES								
4T-05062	**.6250**	**.5662**	**.06**	**4T-05185**	**1.8504**	**.4375**	**.05**	**.5662**
	15.875	14.381	1.0		47.000	11.112	1.3	14.381
4T-05079	***.7874**	**.5662**	**.06**					
	20.000	14.381	1.0					
4T-07000 SERIES								
4T-07079	**.7874**	**.5614**	**.06**	**4T-07196**	**1.9687**	**.3750**	**.04**	**.5313**
	20.000	14.260	1.0		50.005	9.525	.6	13.495
4T-07087	**.8750**	**.5614**	**.05**	**4T-07204**	**2.0470**	**.5000**	**.05**	**.5910**
	22.225	14.260	1.3		51.994	12.700	1.3	15.011
4T-07093	**.9375**	**.5614**	**.06**	**4T-07210X**	**2.0000**	**.5000**	**.06**	**.5910**
	23.812	14.260	1.0		50.800	12.700	1.0	15.011
4T-07100	**1.0000**	**.5614**	**.04**					
	25.400	14.260	.6					

These maximum fillet radii will be cleared by the cone or cup radii.
* Tolerance +.0000 to -.0005 in. (+0 to -.013 mm)

www.precise-rotation.ru

TAPERED ROLLER BEARINGS

Units: **INCHES**
Millimeters

NTN
SERIES 4T

Cone Number	Bore *d*	Cone Width *B*	Max. shaft fillet radius *R*	Cup Number	O.D. *D*	Cup Width *b*	Max. housing fillet radius *r*	Overall Width *T*
4T-09000 SERIES								
4T-09067	**.7500**	**.7500**	**.05**	**4T-09194**	**1.9380**	**.6875**	**.14**	**.8350**
	19.050	19.050	1.3		49.225	17.462	2.5	21.209
				0T-09195	**1.9380**	**.5625**	**.05**	**.7100**
					49.225	14.288	1.3	18.034
				4T-09196	**1.9380**	**.6875**	**.06**	**.8350**
					49.225	17.462	1.0	21.209
4T-09074	**.7500**	**.8480**	**#**	**4T-09194**	**1.9380**	**.6875**	**.14**	**.9063**
	19.050	21.539	#		49.225	17.462	2.5	23.020
4T-09078	**.7500**	**.8480**	**.05**	**4T-09195**	**1.9380**	**.5625**	**.05**	**.7813**
	19.050	21.539	1.3		49.225	14.288	1.3	19.845
				4T-09196	**1.9380**	**.6875**	**.06**	**.9063**
					49.225	17.462	1.0	23.020
4T-11000 SERIES								
4T-11162	**1.6250**	**.6844**	**.06**	**4T-11300**	**3.0000**	**.5625**	**.06**	**.7090**
	41.275	17.384	1.0		76.200	14.288	1.0	18.009
4T-11500 SERIES								
4T-11590	**.6250**	**.5625**	**.06**	**4T-11520**	**1.6875**	**.3750**	**.06**	**.5625**
	15.875	14.288	1.0		42.862	9.525	1.0	14.288
4T-LM11700 SERIES								
* **4T-LM11749**	**.6875**	**.5750**	**.05**	**4T-LM11710**	**1.5700**	**.4200**	**.05**	**.5450**
	17.462	14.605	1.3		39.878	10.668	1.3	13.843
4T-LM11900 SERIES								
* **4T-LM11949**	**.7500**	**.6550**	**.05**	**4T-LM11910**	**1.7810**	**.4750**	**.05**	**.6100**
	19.050	16.637	1.3		45.237	12.065	1.3	15.494
4T-LM12000 SERIES								
4T-12175	**1.7500**	**.6750**	**.06**	**4T-12303**	**3.0312**	**.4688**	**.06**	**.6875**
	44.450	17.145	1.0		76.992	11.908	1.0	17.462
4T-LM12500 SERIES								
4T-12580	**.8125**	**.7813**	**.06**	**4T-12520**	**1.9380**	**.6250**	**.06**	**.7813**
	20.638	19.845	1.0		49.225	15.875	1.0	19.845
4T-LM12600 SERIES								
4T-M12649	**.8437**	**.7200**	**.05**	**4T-M12610**	**1.9687**	**.5500**	**.05**	**.6900**
	21.430	18.288	1.3		50.005	13.970	1.3	17.526
4T-LM112700 SERIES								
* **4T-LM12749**	**.8661**	**.6550**	**.05**	**4T-LM12710**	**1.7810**	**.4750**	**.05**	**.6100**
	22.000	16.637	1.3		45.237	12.065	1.3	15.494
				4T-LM12711	**1.8110**	**.4750**	**.05**	**.6100**
					46.000	12.065	1.3	15.494
4T-13600 SERIES								
4T-13685	**1.5000**	**.7500**	**.14**	**4T-13620**	**2.7170**	**.5938**	**.03**	**.7500**
	38.100	19.050	2.5		69.012	15.083	.8	19.050
4T-13686	**1.5000**	**1.0313**	**.06**	**4T-13621**	**2.7170**	**.5938**	**.09**	**.7500**
	38.100	26.195	1.0		69.012	15.083	2.3	19.050
4T-13687	**1.5000**	**.7500**	**.08**					
	38.100	19.050	1.5					
4T-14000 SERIES								
4T-14116	**1.1900**	**.7710**	**.03**	**4T-14274**	**2.7170**	**.6250**	**.13**	**.7813**
	30.226	19.583	.6		69.012	15.875	3.3	19.845
4T-14117A	**1.1811**	**.7710**	**.14**	**4T-14276**	**2.7170**	**.6250**	**.05**	**.7813**
	30.000	19.583	2.5		69.012	15.875	1.3	19.845
4T-14118	**1.1811**	**.7560**	**.03**	**4T-14282**	**2.8345**	**.5918**	**.06**	**.7481**
	30.000	19.202	.6		71.996	15.032	1.0	19.002
4T-14124	**1.2500**	**.7710**	**.03**	**4T-14283**	**2.8380**	**.7250**	**.09**	**.8813**
	31.750	19.583	.6		72.085	18.415	2.3	22.385
4T-14125A	**1.2500**	**.7710**	**.14**					
	31.750	19.583	2.5					
4T-14131	**1.3125**	**.7710**	**.03**					
	33.338	19.583	.6					
4T-14137A	**1.3750**	**.7710**	**.06**					
	34.925	19.583	1.0					
4T-14138A	**1.3750**	**.7710**	**.14**					
	34.925	19.583	2.5					

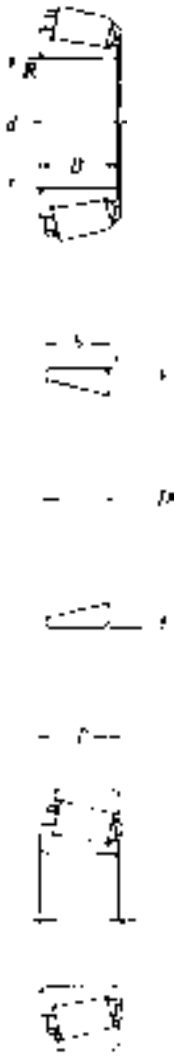

These maximum fillet radii will be cleared by the cone or cup radii.
* Cone Bore Tolerance .0008 to -.0000 in. (+0.020 to 0 mm)
Overall Bearing Width Tolerance +.0140 to -.0000 in (+.356 to -0 mm)
.06 in. (1.5 mm) x 45 degree chamfer

Tolerance +.0000 to -.0010 in. (-0 to -025 mm)
Tolerance +.0000 to -.0005 in. (+0 to -.013 mm)
.08 in. (2.0 mm) x 45 degree front face chamfer

NTN

SERIES 4T

Units: **INCHES**
Millimeters

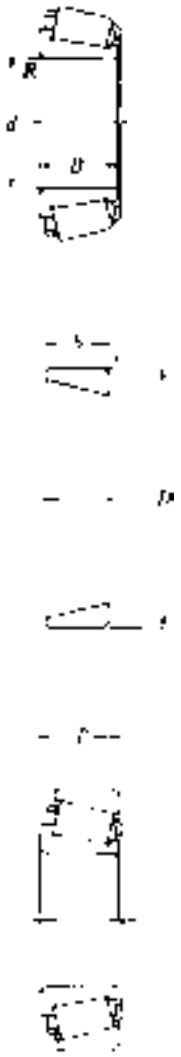

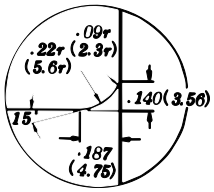

TAPERED ROLLER BEARINGS

Cone Number	Bore *d*	Cone Width *B*	Max. shaft fillet radius *R*	Cup Number	O.D. *D*	Cup Width *b*	Max. housing fillet radius *r*	Overall Width *T*
4T-14000 SERIES (Continued)								
# 4T-14136A	**1.3750**	**1.0520**	**.03**	**4T-14274**	**2.7170**	**.6250**	**.13**	**1.0623**
	34.925	26.721	.6		69.012	15.875	3.3	26.982
				4T-14276	**2.7170**	**.6250**	**.05**	**1.0623**
					69.012	15.875	1.3	26.982
				4T-14282	**2.8345**	**.5918**	**.06**	**1.0291**
					71.996	15.032	1.0	26.139
				4T-14283	**2.8380**	**.7250**	**.09**	**1.1623**
4T-15000 SERIES								
4T-15100	**1.0000**	**.8125**	**.14**	**4T-15243**	**2.4375**	**.5625**	**.08**	**.7500**
	25.400	20.638	2.5		61.912	14.288	1.5	19.050
4T-15101	**1.0000**	**.8125**	**.14**	**4T-15244**	**2.4409**	**.6250**	**.05**	**.8125**
	25.400	20.638	2.5		62.000	15.875	1.3	20.638
4T-15103S	**1.0300**	**.7850**	**.03**	**4T-15245**	**2.4409**	**.5625**	**.05**	**.7500**
	26.162	19.939	.6		62.000	14.288	1.3	19.050
4T-15106	**1.0625**	**.8125**	**.03**	**4T-15250**	**2.5000**	**.6250**	**.05**	**.8125**
	26.988	20.638	.6		63.500	15.875	1.3	20.638
4T-15113	**1.1250**	**.8125**	**.03**	**4T-15250X**	**2.5000**	**.6250**	**.06**	**.8125**
	28.575	20.638	.6		63.500	15.875	1.0	20.638
4T-15116	**1.1855**	**.8125**	**.03**					
	30.112	20.638	.6					
4T-15117	***1.1811**	**.8125**	**.05**					
	30.000	20.638	1.3					
4T-15118	**1.1895**	**.8125**	**.14**					
	30.213	20.638	2.5					
4T-15119	**1.1895**	**.8125**	**.06**					
	30.213	20.638	1.0					
4T-15120	**1.1895**	**.8125**	**.03**					
	30.213	20.638	.6					
4T-15125	**1.2500**	**.8125**	**.14**					
	31.750	20.638	2.5					
4T-15126	**1.2500**	**.8125**	**.03**					
	31.750	20.638	.6					
4T-15123	**1.2500**	**.7500**		**4T-15243**	**2.4375**	**.5625**	**.08**	**.7150**
	31.750	19.050			61.912	14.288	2.0	18.161
				4T-15244	**2.4409**	**.6250**	**.05**	**.7775**
					62.000	15.875	1.3	19.749
				4T-15245	**2.4409**	**.5625**	**.05**	**.7150**
					62.000	14.288	1.3	18.161
				4T-15250	**2.5000**	**.6250**	**.05**	**.7775**
					63.500	15.875	1.3	19.749
				4T-15250X	**2.5000**	**.6250**	**.06**	**.7775**
					63.500	15.875	1.5	19.749
4T-15500 SERIES								
4T-15578	**1.0000**	**.6875**	**.05**	**4T-15520**	**2.2500**	**.5313**	**.06**	**.6875**
	25.400	17.462	1.3		57.150	13.495	1.5	17.462
4T-15580	**1.0625**	**.6875**	**.14**					
	26.988	17.462	2.5					
4T-15590	**1.1250**	**.6875**	**.14**					
	28.575	17.462	2.5					
4T-16000 SERIES								
4T-16150	**1.5000**	**.8125**	**.14**	**4T-16282**	**2.8346**	**.5605**	**.06**	**.7480**
	38.100	20.638	2.5		72.000	14.237	1.5	19.000
				4T-16284	**2.8440**	**.6250**	**.05**	**.8125**
					72.238	15.875	1.3	20.638
4T-17000 SERIES								
4T-17118	**1.1811**	**.6522**	**.06**	**4T-17244**	**2.4409**	**.5625**	**.06**	**.6300**
	30.000	16.566	1.0		62.000	14.288	1.5	16.002
4T-17500 SERIES								
4T-17580	**.6250**	**.6563**	**.06**	**4T-17520**	**1.6875**	**.5313**	**.06**	**.6563**
	15.875	16.670	1.0		42.862	13.495	1.5	16.670
4T-17800 SERIES								
4T-17887	**1.7807**	**.8125**	**.08**	**4T-17831**	**3.1490**	**.5937**	**.05**	**.7812**
	45.230	20.638	1.5		79.985	15.080	1.3	19.842
4T-18500 SERIES								
4T-18590	**1.6250**	**.6875**	**.14**	**4T-18520**	**2.8750**	**.5000**	**.06**	**.6562**
	41.275	17.462	2.5		73.025	12.700	1.5	16.667

These maximum fillet radii will be cleared by the cone or cup radii.

* Tolerance .0000 to -.0005 in. (+0 to -.013 mm)

** Tolerance .0008 to .0000 in. (+.020 to 0 mm)

\# Extended shoulder on back face

TAPERED ROLLER BEARINGS

Units: **INCHES**
Millimeters

NTN
SERIES 4T

Cone Number	Bore *d*	Cone Width *B*	Max. shaft fillet radius *R*	Cup Number	O.D. *D*	Cup Width *b*	Max. housing fillet radius *r*	Overall Width *T*
4T-18600 SERIES								
4T-18685	**1.7500**	**.6875**	**.11**	**4T-18620**	**3.1250**	**.5313**	**.06**	**.6875**
	44.450	17.462	2.8		79.375	13.495	1.0	17.462
4T-18690	**1.8125**	**.6875**	**.11**					
	46.038	17.462	2.8					
4T-18700 SERIES								
4T-18780	**1.8125**	**.6875**	**.09**	**4T-18720**	**3.3465**	**.5313**	**.06**	**.6875**
	46.038	17.462	2.3		85.000	13.495	1.0	17.462
4T-18790	**2.0000**	**.6875**	**.14**					
	50.800	17.462	2.5					
4T-19000 SERIES								
4T-19150	**1.5000**	**.6504**	**.06**	**4T-19268**	**2.6875**	**.4688**	**.06**	**.6250**
	38.100	16.520	1.0		68.262	11.908	1.0	15.875
				4T-19268X	**2.6880**	**.6312**	**.06**	**.7874**
					68.275	16.032	1.0	20.000
				4T-19283X	**2.8346**	**.5625**	**.08**	**.6700**
					72.000	14.288	1.5	17.018
4T-21000 SERIES								
4T-21075	**.7500**	**.8598**	**.06**	**4T-21212**	**2.1250**	**.6250**	**.09**	**.8750**
	19.050	21.839	1.0		53.975	15.875	2.3	22.225
4T-22700 SERIES								
4T-22780	**1.6875**	**1.0625**	**.14**	**4T-22720**	**3.2500**	**.8125**	**.13**	**1.0313**
	42.862	26.988	2.5		82.550	20.638	3.3	26.195
4T-23000 SERIES								
4T-23100	**1.0000**	**.8450**	**.06**	**4T-23250X**	**2.5000**	**.5780**	**.09**	**.8540**
	25.400	21.463	1.0		63.500	14.681	2.3	21.692
4T-24700 SERIES								
4T-24780	**1.6250**	**.9063**	**.14**	**4T-24720**	**3.0000**	**.6875**	**.03**	**.8750**
	41.275	23.020	2.5		76.200	17.462	.6	22.225
				4T-24721	**3.0000**	**.8125**	**.09**	**1.0000**
					76.200	20.638	2.3	25.400
				4T-24722	**3.0000**	**.6875**	**.13**	**.8750**
					76.200	17.462	3.3	22.225
4T-25500 SERIES								
4T-25577	**1.6880**	**1.0000**	**.13**	**4T-25519**	**3.2500**	**.7500**	**.08**	**.9375**
	42.875	25.400	2.5		82.550	19.050	1.5	23.812
***4T-25578**	**1.6875**	**1.0000**	**.09**	**4T-25520**	**3.2650**	**.7500**	**.03**	**.9375**
	42.862	25.400	2.3		82.931	19.050	.6	23.812
4T-25580	**1.7500**	**1.0000**	**.14**	**4T-25521**	**3.2700**	**.7500**	**.13**	**.9375**
	44.450	25.400	2.5		83.058	19.050	3.3	23.812
4T-25584	**1.7710**	**1.0000**	**.06**	**4T-25522**	**3.2700**	**.7525**	**.08**	**.9400**
	44.983	25.400	1.0		83.058	19.114	1.5	23.876
4T-25590	**1.7960**	**1.0000**	**.14**	**4T-25523**	**3.2650**	**.8750**	**.09**	**1.0625**
	45.618	25.400	2.5		82.931	22.225	2.3	26.988
				4T-25526	**3.3465**	**.7500**	**.09**	**.9375**
					85.000	19.050	2.3	23.812
4T-25583	**1.7500**	**1.4125**		**4T-25519**	**3.2500**	**.7500**	**.08**	**1.3500**
	44.450	35.878			82.550	19.050	1.5	34.290
				4T-25520	**3.2650**	**.7500**	**.03**	**1.3500**
					82.931	19.050	.6	34.290
				4T-25521	**3.2700**	**.7500**	**.13**	**1.3500**
					83.058	19.050	3.3	34.290
				4T-25522	**3.2700**	**.7525**	**.08**	**1.3525**
					83.058	19.114	1.5	34.354
				4T-25523	**3.2650**	**.8750**	**.09**	**1.4750**
					82.931	22.225	2.3	37.465
				4T-25526	**3.3465**	**.7500**	**.09**	**1.3500**
					85.000	19.050	2.3	34.290
4T-25800 SERIES								
4T-25877	**1.3750**	**.9688**	**.06**	**4T-25820**	**2.8750**	**.7500**	**.09**	**.9375**
	34.925	24.608	1.0		73.025	19.050	2.3	23.812
4T-25878	**1.3750**	**.9688**	**.14**	**4T-25821**	**2.8750**	**.7500**	**.03**	**.9375**
	34.925	24.608	2.5		73.025	19.050	.6	23.812
4T-25880	**1.4365**	**.9688**	**.06**					
	36.487	24.608	1.0					

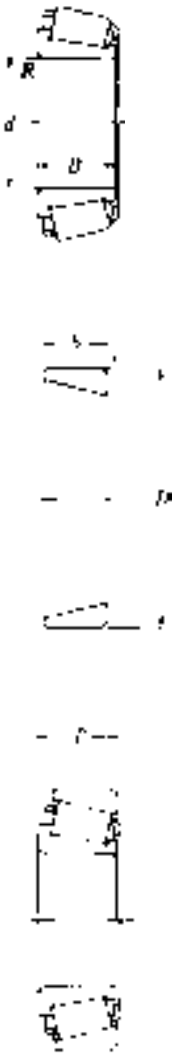

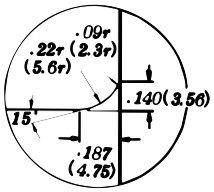

These maximum fillet radii will be cleared by the cone or cup radii.

* Large rib OD ground .03 in. (0.8 mm) x 45 front face chamfer.

NTN

SERIES 4T

Units: **INCHES**
Millimeters

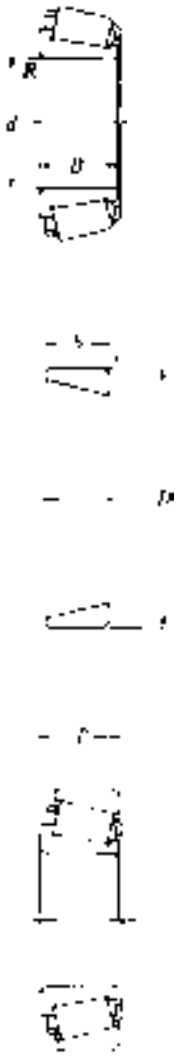

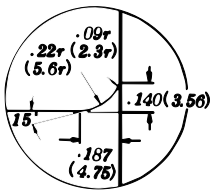

TAPERED ROLLER BEARINGS

Cone Number	Bore *d*	Cone Width *B*	Max. shaft fillet radius *R*	Cup Number	O.D. *D*	Cup Width *b*	Max. housing fillet radius *r*	Overall Width *T*
4T-26800 SERIES								
4T-26878	**1.5000**	**1.0000**	**.03**	**4T-26820**	**3.1562**	**.8125**	**.13**	**1.0000**
	38.100	25.400	.6		80.167	20.638	3.3	25.400
4T-26881	**1.5625**	**1.0000**	**.14**	**4T-26822**	**3.1250**	**.7500**	**.03**	**.9375**
	39.688	25.400	2.5		79.375	19.050	.6	23.812
4T-26882	**1.6250**	**1.0000**	**.14**	**4T-26823**	**3.0000**	**.8125**	**.06**	**1.0000**
	41.275	25.400	2.5		76.200	20.638	1.0	25.400
4T-26883	**1.3780**	**1.0000**	**.03**	**4T-26830**	**3.1562**	**.8125**	**.03**	**1.0000**
	35.000	25.400	.6		80.167	20.638	.6	25.400
4T-26884	**1.6880**	**1.0000**	**.14**					
	42.875	25.400	2.5					
4T-26886	**1.6880**	**1.0000**	**.06**					
	42.875	25.400	1.0					
4T-27800 SERIES								
4T-27881	**1.5000**	**.9330**	**.14**	**4T-27820**	**3.1510**	**.7288**	**.06**	**.9688**
	38.100	23.698	2.5		80.035	18.512	1.0	24.608
4T-28000 SERIES								
4T-28150	**1.5000**	**.8244**	**.06**	**4T-28300**	**3.0000**	**.6105**	**.05**	**.8125**
	38.100	20.940	1.0		76.200	15.507	1.3	20.638
4T-28500 SERIES								
4T-28580	**2.0000**	**1.0000**	**.14**	**4T-28520**	**3.5425**	**.7869**	**.09**	**.9744**
	50.800	25.400	2.5		89.980	19.987	2.3	24.750
4T-28584	**2.0625**	**1.0000**	**.14**	**4T-28521**	**3.6250**	**.7813**	**.03**	**.9688**
	52.388	25.400	2.5		92.075	19.845	.6	24.608
4T-28600 SERIES								
4T-28678	**2.0000**	**.9688**	**.14**	**4T-28621**	**3.8125**	**.7656**	**.03**	**.9688**
	50.800	24.608	2.5		96.838	19.446	.6	24.608
4T-28682	**2.2500**	**.9688**	**.14**	**4T-28622**	**3.8437**	**.7656**	**.03**	**.9688**
	57.150	24.608	2.5		97.630	19.446	.6	24.608
4T-28900 SERIES								
4T-28980	**2.3613**	**1.0000**	**.14**	**4T-28920**	**4.0000**	**.7813**	**.13**	**1.0000**
	59.977	25.400	2.5		101.600	19.845	3.3	25.400
4T-28985	**2.3750**	**1.0000**	**.14**	**4T-28921**	**3.9370**	**.7813**	**.13**	**1.0000**
	60.325	25.400	2.5		100.000	19.845	3.3	25.400
4T-29500 SERIES								
4T-29585	**2.5000**	**1.0000**	**.14**	**4T-29520**	**4.2500**	**.7500**	**.13**	**1.0000**
	63.500	25.400	2.5		107.950	19.050	3.3	25.400
4T-29600 SERIES								
4T-29675	**2.7500**	**1.0000**	**.06**	**4T-28620**	**4.4375**	**.7500**	**.13**	**1.0000**
	69.850	25.400	1.0		112.712	19.050	3.3	25.400
4T-29685	**2.8750**	**1.0000**	**.14**	**4T-29630**	**4.7500**	**.7500**	**.13**	**1.0000**
	73.025	25.400	2.5		120.650	19.050	3.3	25.400
4T-LM29700 SERIES								
4T-LM29748	**1.5000**	**.7200**		**4T-LM29710**	**2.5625**	**.5500**	**.05**	**.7100**
	38.100	18.288			65.088	13.970	1.3	18.034
4T-31500 SERIES								
4T-31593	**1.3750**	**1.1250**	**.14**	**4T-31520**	**3.0000**	**.9375**	**.13**	**1.1563**
	34.925	28.575	2.5		76.200	23.812	3.3	29.370
4T-31594	**1.3750**	**1.1250**	**.06**					
	34.925	28.575	1.0					
4T-31597	**1.4375**	**1.1250**	**.14**					
	36.512	28.575	2.5					
4T-33000 SERIES								
4T-33225	**2.2500**	**1.1875**	**.14**	**4T-33462**	**4.6250**	**.9375**	**.13**	**1.1875**
	57.150	30.162	2.5		117.475	23.812	3.3	30.162
4T-33262	**2.6250**	**1.1875**	**.14**	**4T-33472**	**4.7244**	**.9230**	**.03**	**1.1730**
	66.675	30.162	2.5		120.000	23.444	.6	29.764
4T-33275	**2.7500**	**1.1875**	**.14**					
	69.850	30.162	2.5					
4T-33281	**2.8125**	**1.1875**	**.14**					
	71.438	30.162	2.5					
4T-33287	**2.8750**	**1.1875**	**.14**					
	73.025	30.162	2.5					

These maximum fillet radii will be cleared by the cone or cup radii.

TAPERED ROLLER BEARINGS

Units: **INCHES**
Millimeters

NTN
SERIES 4T

Cone Number	Bore d	Cone Width B	Max. shaft fillet radius R	Cup Number	O.D. D	Cup Width b	Max. housing fillet radius r	Overall Width T
4T-33800 SERIES								
4T-33891	**2.0625** 52.388	**1.1250** 28.575	**.14** 2.5	**4T-33821**	**3.7500** 95.250	**.8750** 22.225	**.09** 2.3	**1.0938** 27.783
4T-34000 SERIES								
4T-34306	**3.0625** 77.788	**.9060** 23.012	**.14** 2.5	**4T-34478**	**4.7812** 121.442	**.6875** 17.462	**.08** 1.5	**.9688** 24.608
				4T-34492A	**4.9233** 125.052	**.6457** 16.400	**.08** 1.5	**.9343** 23.731
4T-39500 SERIES								
4T-39581	**2.2500** 57.150	**1.1875** 30.162	**.31** 6.0	**4T-39520**	**4.4375** 112.712	**.9375** 23.812	**.13** 3.3	**1.1875** 30.162
4T-39585	**2.5000** 63.500	**1.1875** 30.162	**.14** 2.5					
4T-39590	**2.6250** 66.675	**1.1875** 30.162	**.14** 2.5					
4T-41000 SERIES								
4T-41125	**1.1250** 28.575	**.9550** 24.257	**.19** 4.8	**4T-41286**	**2.8593** 72.626	**.6875** 17.462	**.06** 1.0	**.9688** 24.608
4T-42000 SERIES								
4T-42346	**3.4630** 87.960	**1.1406** 28.971	**.12** 2.5	**4T-42584**	**5.8437** 148.430	**.8438** 21.433	**.12** 2.5	**1.1250** 28.575
4T-42350	**3.5000** 88.900	**1.1406** 28.971	**.12** 2.5	**4T-42587**	**5.8750** 149.225	**.9688** 24.608	**.13** 3.3	**1.2500** 31.750
4T-42368	**3.6875** 93.662	**1.1406** 28.971	**.12** 2.5					
4T-42375	**3.7500** 95.250	**1.1406** 28.971	**.12** 2.5					
4T-42381	**3.8125** 96.838	**1.1406** 28.971	**.14** 2.5					
4T-42600 SERIES								
4T-42687	**3.0000** 76.200	**1.2205** 31.000	**.14** 2.5	**4T-42620**	**5.0000** 127.000	**.8750** 22.225	**.13** 3.3	**1.1875** 30.162
4T-43000 SERIES								
4T-43131	**1.3125** 33.338	**.9478** 24.074	**.14** 2.5	**4T-43300**	**3.0000** 76.200	**.6563** 16.670		**.9688** 24.608
4T-44000 SERIES								
4T-44150	**1.5000** 38.100	**.9330** 23.698	**.09** 2.3	**4T-44348**	**3.4834** 88.500	**.6875** 17.462	**.06** 1.0	**1.0000** 25.400
4T-L44600 SERIES								
***4T-L44640**	**.9375** 23.813	**.5800** 14.732	**.06** 1.0	**4T-L44610**	**1.9800** 50.292	**.4200** 10.668	**.05** 1.3	**.5600** 14.224
***4T-L44643**	**1.0000** 25.400	**.5800** 14.732	**.05** 1.3					
***4T-L44649**	**1.0625** 26.988	**.5800** 14.732	**.14** 2.5					
4T-45200 SERIES								
4T-45282	**1.8750** 47.625	**1.2188** 30.958	**.14** 2.5	**4T-45220**	**4.1250** 104.775	**.9375** 23.813	**.13** 3.3	**1.1875** 30.162
4T-45284	**2.0000** 50.800	**1.2188** 30.958	**.25** 6.4					
4T-L45400 SERIES								
***4T-L45449**	**1.1417** 29.000	**.5800** 14.732	**.14** 2.5	**4T-L45410**	**1.9800** 50.292	**.4200** 10.668	**.05** 1.3	**.5600** 14.224
4T-46000 SERIES								
4T-46143	**1.4375** 36.512	**1.2500** 31.750	**.06** 1.0	**4T-46368**	**3.6875** 93.662	**1.0313** 26.195	**.13** 3.3	**1.2500** 31.750
4T-46162	**1.6250** 41.275	**1.2500** 31.750	**.03** .6	**4T-46369**	**3.6875** 93.662	**1.0313** 26.195	**.05** 1.3	**1.2500** 31.750
4T-46700 SERIES								
4T-46790	**6.5000** 165.100	**1.5625** 39.688	**.14** 2.5	**4T-46720**	**8.8750** 225.425	**1.3125** 33.338	**.13** 3.3	**1.6250** 41.275

These maximum fillet radii will be cleared by the cone or cup radii.

* Cone bore tolerance +.0008 to -.0000 in. (+.020 to -0 mm)
Overall bearing width tolerance +.0140 to -.0000 in. (+.356 to -0 mm)
.13 in. (3.3 mm) x 45 degree back face chamfer

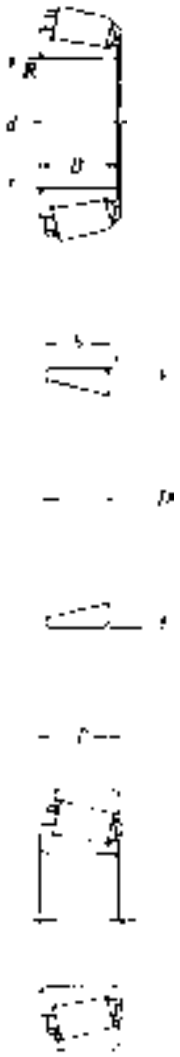

NTN

SERIES 4T

Units: **INCHES**
Millimeters

TAPERED ROLLER BEARINGS

Cone Number	Bore *d*	Cone Width *B*	Max. shaft fillet radius *R*	Cup Number	O.D. *D*	Cup Width *b*	Max. housing fillet radius *r*	Overall Width *T*
4T-47600 SERIES								
4T-47678	**3.0000**	**1.3125**	**.25**	**4T-47620**	**5.2500**	**1.0313**	**.13**	**1.3125**
	76.200	33.338	6.4		133.350	26.195	3.3	33.338
4T-47679	**3.0000**	**1.3125**	**.14**	**4T-47623A**	**5.3750**	**1.7500**		**1.7500**
	76.200	33.338	2.5		136.525	44.450		44.450
4T-47681	**3.1875**	**1.3125**	**.14**					
	80.962	33.338	2.5					
4T-47686	**3.2500**	**1.3125**	**.14**					
	82.550	33.338	2.5					
4T-47687	**3.2500**	**1.3125**	**.27**					
	82.550	33.338	6.8					
4T-47800 SERIES								
4T-47890	**3.6250**	**1.3750**	**.14**	**4T-47820**	**5.7500**	**1.0313**	**.13**	**1.3125**
	92.075	34.925	2.5		146.050	26.195	3.3	33.338
4T-47896	**3.7500**	**1.3750**	**.14**					
	95.250	34.925	2.5					
4T-LM48500 SERIES								
#4T-LM48548	**1.3750**	**.7200**		**4T-LM48510**	**2.5625**	**.5500**	**.05**	**.7100**
	34.925	18.288			65.088	13.970	1.3	18.034
4T-48600 SERIES								
4T-48684	**5.6250**	**1.5625**	**.31**	**4T-48620**	**7.8750**	**1.3437**	**.13**	**1.6250**
	142.875	39.688	.6		200.025	34.130	3.3	41.275
4T-49000 SERIES								
4T-49175	**1.7500**	**1.2500**	**.14**	**4T-49368**	**3.6875**	**1.0000**	**.13**	**1.2500**
	44.450	31.750	2.5		93.662	25.400	3.3	31.750
4T-49500 SERIES								
4T-49585	**2.0000**	**1.2500**	**.14**	**4T-49520**	**4.0000**	**1.0000**	**.13**	**1.2500**
	50.800	31.750	2.5		101.600	25.400	3.3	31.750
4T-52000 SERIES								
4T-52387	**3.8750**	**1.4219**	**.14**	**4T-52618**	**6.1875**	**1.0313**	**.13**	**1.4375**
	98.425	36.116	2.5		157.162	26.195	3.3	36.512
4T-52400	**4.0000**	**1.4219**	**.14**	**4T-52638**	**6.3750**	**1.1563**	**.13**	**1.5625**
	101.600	36.116	2.5		161.925	29.370	3.3	39.688
4T-52401	**4.0000**	**1.4219**	**.31**					
	101.600	36.116	.6					
4T-55000C SERIES								
4T-55175C	**1.7500**	**1.0594**	**.14**	**4T-55437**	**4.3750**	**.8125**	**.13**	**1.1875**
	44.450	26.909	2.5		111.125	20.638	3.3	30.162
4T-55200C	**2.0000**	**1.0594**	**.14**					
	50.800	26.909	2.5					
4T-56000 SERIES								
4T-56425	**4.2500**	**1.4375**	**.14**	**4T-56650**	**6.5000**	**1.0625**	**.13**	**1.4375**
	107.950	36.512	2.5		165.100	26.988	3.3	36.512
4T-59000 SERIES								
4T-59162	**1.6250**	**1.4375**	**.06**	**4T-59429**	**4.2900**	**1.0625**	**.13**	**1.3750**
	41.275	36.512	1.0		108.966	26.987	3.3	34.925
4T-59200	**2.0000**	**1.4375**	**.14**					
	50.800	36.512	2.5					
4T-65300 SERIES								
4T-65390	**1.9375**	**1.7500**	**.14**	**4T-65320**	**4.5000**	**1.3750**	**.13**	**1.7500**
	49.212	44.450	2.5		114.300	34.925	3.3	44.450
4T-LM67000 SERIES								
#4T-LM67048	**1.2500**	**.6600**		**4T-LM67010**	**2.3280**	**.4650**	**.05**	**.6250**
	31.750	16.764			59.131	11.811	1.3	15.875
4T-67300 SERIES								
4T-67388	**5.0000**	**1.8125**	**.14**	**4T-67322**	**7.7500**	**1.5000**	**.13**	**1.8125**
	127.000	46.038	2.5		196.850	38.100	3.3	46.038
				4T-67324	**8.0000**	**1.8125**	**.13**	**1.8125**
					203.200	46.038	3.3	46.038

These maximum fillet radii will be cleared by the cone or cup radii.

\# Cone bore tolerance +.0008 to -.0000 in. (+.020 to -.0 mm)

Overall bearing width tolerance +.0140 to -.0000 in. (+.356 to -0 mm)

Threaded O.D.

Front face corner break .015 in. (0.38 mm) max.

.03 in. (.8 mm) x 45 degree back face chamfer

www.precise-rotation.ru

TAPERED ROLLER BEARINGS

Units: **INCHES**
Millimeters

NTN
SERIES 4T

Cone Number	Bore *d*	Cone Width *B*	Max. shaft fillet radius *R*	Cup Number	O.D. *D*	Cup Width *b*	Max. housing fillet radius *r*	Overall Width *T*
4T-L68100 SERIES								
4T-L68149	***1.3780**	**.6600**		**4T-L68110**	**2.3280**	**.4700**	**.05**	**.6250**
	35.000	16.764			59.131	11.938	1.3	15.875
				4T-L68111	**2.3622**	**.4700**	**.05**	**.6250**
					60.000	11.938	1.3	15.875
4T-L69300 SERIES								
4T-JL69349	**1.4961**	**.6693**		**4T-JL69310**	**2.4803**	**.5313**	**.05**	**.6693**
	38.000	17.000			63.000	13.495	1.3	17.000
4T-72000C SERIES								
4T-72188C	**1.8750**	**1.2910**	**.03**	**4T-72487**	**4.8750**	**1.0000**	**.13**	**1.4375**
	47.625	32.791	.6		123.825	25.400	3.3	36.512
4T-72200C	**2.0000**	**1.2910**	**.14**					
	50.800	32.791	2.5					
4T-78000C SERIES								
4T-78215C	**2.1250**	**1.3085**	**.14**	**4T-78551**	**5.5130**	**.9260**	**.09**	**1.4375**
	53.975	33.236	2.5		140.030	23.520	2.3	36.512
4T-78225C	**2.2500**	**1.3085**	**.14**					
	57.150	33.236	2.5					
4T-78238C	**2.3750**	**1.3085**	**.20**					
	60.325	33.236	4.0					
4T-LM78300 SERIES								
4T-LM78349	***1.3780**	**.6693**		**4T-LM78310A**	**2.4409**	**.5354**	**.06**	**.6575**
	35.000	17.000			62.000	13.600	1.0	16.700
4T-HM81600 SERIES								
4T-HM81649	***.6299**	**.8268**	**.04**	**4T-HM81610**	**1.8504**	**.6299**	**.08**	**.8268**
	16.000	21.000	.6		47.000	16.000	1.5	21.000
4T-M84200 SERIES								
4T-M84249	**1.0000**	**.9100**	**.03**	**4T-M84210**	**2.3437**	**.7200**	**.06**	**.9200**
	25.400	23.114	.6		59.530	18.288	1.0	23.368
4T-M84500 SERIES								
4T-M84548	**1.0000**	**.7650**	**.06**	**4T-M84510**	**2.2500**	**.5800**	**.06**	**.7650**
	25.400	19.431	1.0		57.150	14.732	1.0	19.431
4T-M86600 SERIES								
4T-M86649	**1.1875**	**.8438**	**.06**	**4T-M86610**	**2.5312**	**.6563**	**.06**	**.8438**
	30.162	21.433	1.0		64.292	16.670	1.0	21.433
4T-M88800 SERIES								
4T-M88048	**1.3125**	**.8750**	**.03**	**4T-M88010**	**2.6875**	**.6875**	**.06**	**.8750**
	33.338	22.225	.6		68.262	17.462	1.0	22.225
4T-HM88500 SERIES								
4T-HM88542	**1.2500**	**1.0928**	**.05**	**4T-HM88510**	**2.8750**	**.9063**	**.13**	**1.1563**
	31.750	27.783	1.3		73.025	23.020	3.3	29.370
4T-HM88547	**1.3125**	**1.0938**	**.03**					
	33.338	27.783	.6					
4T-HM88600 SERIES								
4T-HM88649	**1.3750**	**1.0000**	**.09**	**4T-HM88610**	**2.8438**	**.7812**	**.09**	**1.0000**
	34.925	25.400	2.3		72.233	19.842	2.3	25.400
				4T-HM88611	**2.8346**	**.8442**	**.06**	**1.0630**
					72.000	21.443	1.0	27.000
4T-HM89400 SERIES								
4T-HM89443	**1.3125**	**1.1250**	**.03**	**4T-HM89410**	**3.0000**	**.9063**	**.13**	**1.1563**
	33.338	28.575	.6		76.200	23.020	3.3	29.370
4T-HM89446	**1.3750**	**1.1250**	**.14**	**4T-HM89411**	**3.0000**	**.9063**	**.03**	**1.1563**
	34.925	28.575	2.5		76.200	23.020	.6	29.370
4T-HM89448	**1.4375**	**1.1250**	**.03**					
	36.512	28.575	.6					
4T-HM89449	**1.4375**	**1.1250**	**.14**					
	36.512	28.575	2.5					
4T-LM102900 SERIES								
4T-LM102949	**1.7812**	**.7800**	**.14**	**4T-LM102910**	**2.8910**	**.6200**	**.03**	**.7700**
	45.242	19.812	2.5		73.431	15.748	.6	19.558

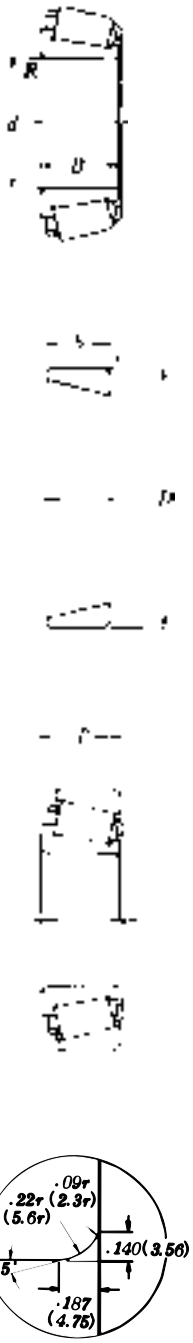

These maximum fillet radii will be cleared by the cone or cup radii. .06 in. (1.5 mm) front face chamfer
Cup outside dia. tolerance +.0000 to -.0010 in. (+0 to -.025 mm) * Tolerance +.0000 to - .0005 in. (+0 to -.013 mm)
Overall bearing width tolerance +.0140 to -.0000 in.. (+0.356 to -.0 mm)
For 'J' prefix part tolerances see Table 8 Pg. 254

NTN

SERIES 4T

Units: **INCHES**
Millimeters

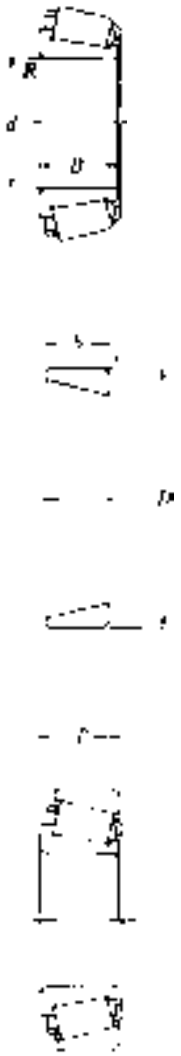

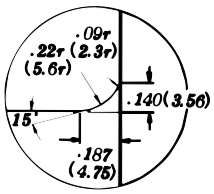

TAPERED ROLLER BEARINGS

Cone Number	Bore *d*	Cone Width *B*	Max. shaft fillet radius *R*	Cup Number	O.D. *D*	Cup Width *b*	Max. housing fillet radius *r*	Overall Width *T*
4T-LM104900 SERIES								
4T-LM104949	**2.0000** 50.800	**.8750** 22.225	**.14** 2.5	**4T-LM104911**	**3.2500** 82.550	**.6500** 16.510	**.05** 1.3	**.8500** 21.590
4T-JLM104948	**1.9685** 50.000	**.8465** 21.500	**.12** 2.5	**4T-JLM104910**	**3.2283** 82.000	**.6693** 17.000	**.02** .3	**.8465** 21.500
4T-M201000 SERIES								
4T-M201047	**1.5625** 39.688	**.8700** 22.098	**.03** .6	**4T-M201011**	**2.8750** 73.025	**.8400** 21.336	**.09** 2.3	**1.0100** 25.654
4T-M205100 SERIES								
4T-JM205149	**1.9685** 50.000	**1.1024** 28.000	**.12** 2.5	**4T-JM205110**	**3.5433** 90.000	**.9055** 23.000	**.10** 2.0	**1.1024** 28.000
4T-M207000 SERIES								
4T-JM207049	**2.1654** 55.000	**1.1417** 29.000	**.06** 1.0	**4T-JM207010**	**3.7402** 95.000	**.9252** 23.500	**.10** 2.0	**1.1417** 29.000
4T-H211700 SERIES								
4T-JH211749	**2.5591** 65.000	**1.5157** 38.500	**.12** 2.5	**4T-JH211710**	**4.7244** 120.000	**1.2598** 32.000	**.10** 2.0	**1.5354** 39.000
4T-HM212000 SERIES								
4T-HM212044	**2.3750** 60.325	**1.5100** 38.354	**.31** 6.0	**4T-HM212010**	**4.8125** 122.238	**1.1700** 29.718	**.06** 1.0	**1.5000** 38.100
4T-HM212046	**2.5000** 63.500	**1.5100** 38.354	**.14** 2.5	**4T-HM212011**	**4.8125** 122.238	**1.1700** 29.718	**.13** 3.3	**1.5000** 38.100
4T-HM212047	**2.5000** 63.500	**1.5100** 38.354	**.28** 7.0					
4T-HM212049	**2.6250** 66.675	**1.5100** 38.354	**.14** 2.5					
4T-H212700 SERIES								
4T-H212749	***2.5984** 66.000	**1.6339** 41.500	**.28** 7.0	**4T-212710**	**4.8819** 124.000	**1.3386** 34.000	**.14** 2.5	**1.6339** 41.500
4T-L217800 SERIES								
4T-L217849	**3.5000** 88.900	**.8125** 20.638	**.06** 1.0	**4T-L217810**	**4.8750** 123.825	**.6563** 16.670	**.06** 1.0	**.8125** 20.638
4T-HM218200 SERIES								
4T-HM218248	**3.5433** 90.000	**1.5748** 40.000	**.28** 7.0	**4T-HM218210**	**5.7874** 147.000	**1.2795** 32.500	**.14** 2.5	**1.5748** 40.000
4T-HM220100 SERIES								
4T-HM220149	***3.9370** 100.000	**1.6535** 42.000	**.31** 6.0	**4T-HM220110**	**6.1811** 157.000	**1.3386** 34.000	**.14** 2.5	**1.6535** 42.000
4T-LM300800 SERIES								
4T-LM300849	***1.6142** 41.000	**.7087** 18.000		**4T-LM300811**	**2.6772** 68.000	**.5315** 13.500	**.06** 1.0	**.6890** 17.500
4T-H307700 SERIES								
4T-JH307749	**2.1654** 55.000	**1.5354** 39.000	**.12** 2.5	**4T-JH307710**	**4.3307** 110.000	**1.2598** 32.000	**.10** 2.0	**1.5354** 39.000
4T-LM501300 SERIES								
4T-LM501349	**1.6250** 41.275	**.7800** 19.812	**.14** 2.5	**4T-LM501310**	**2.8910** 73.431	**.5800** 14.732	**.03** .6	**.7700** 19.558
				4T-LM501314	**2.8910** 73.431	**.6537** 16.604	**.03** .6	**.8437** 21.430
4T-LM503300 SERIES								
4T-LM503349	***1.8110** 46.000	**.7087** 18.000	**.09** 2.3	**4T-LM503310**	**2.9528** 75.000	**.5512** 14.000	**.06** 1.0	**.7087** 18.000
4T-HH506300 SERIES								
4T-HH506348	**1.9375** 49.212	**1.7500** 44.450	**.14** 2.5	**4T-HH506310**	**4.5000** 114.300	**1.4200** 36.068	**.13** 3.3	**1.7500** 44.450
4T-LM506800 SERIES								
4T-JLM506849	**2.1654** 55.000	**.9055** 23.000	**.06** 1.0	**4T-JLM506810**	**3.5433** 90.000	**.7283** 18.500	**.02** .3	**.9055** 23.000

These maximum fillet radii will be cleared by the cone or cup radii.

* Cone bore tolerance +.0000 to -.0005 in. (+0 to -.013 mm)
Cup outside dia. tolerance +.0000 to -.0010 in. (+0 to -.025 mm)
.09 in. (2.3 mm) front face chamfer
Tolerance +.0000 to -.0010 in. (+0 to -.025 mm)
For 'J' prefix part tolerances see Table 8 Page 254

www.precise-rotation.ru

TAPERED ROLLER BEARINGS

Units: **INCHES**
Millimeters

NTN
SERIES 4T

Cone Number	Bore *d*	Cone Width *B*	Max. shaft fillet radius *R*	Cup Number	O.D. *D*	Cup Width *b*	Max. housing fillet radius *r*	Overall Width *T*
4T-LM508700 SERIES								
* **4T-JLM508748**	**2.3622** 60.000	**.9449** 24.000	**.20** 5.0	**4T-JLM508710**	**3.7402** 95.000	**.7480** 19.000	**.10** 2.5	**.9449** 24.000
4T-M511900 SERIES								
* **4T-JM511946**	**2.5590** 65.000	**1.1024** 28.000	**.12** 3.0	**4T-JM511910**	**4.3307** 110.000	**.8858** 22.500	**.10** 2.5	**1.1024** 28.000
4T-HM516400 SERIES								
4T-HM516448	**3.2500** 82.550	**1.5625** 39.688	**.27** 6.8	**4T-HM516410**	**5.2500** 133.350	**1.2813** 32.545	**.13** 3.3	**1.5625** 39.688
4T-M515600 SERIES								
* **4T-JM515649**	**3.1496** 80.000	**1.3386** 34.000	**.12** 3.0	**4T-JM515610**	**5.1181** 130.000	**1.1220** 28.500	**.10** 2.5	**1.3780** 35.000
4T-HM515700 SERIES								
4T-HM515745	**3.0000** 76.200	**1.8150** 46.100	**.14** 3.5	**4T-HM515716**	**5.5960** 142.138	**1.3125** 33.338	**.13** 3.3	**1.7500** 44.450
4T-HM516800 SERIES								
* **4T-JHM516849**	**3.3465** 85.000	**1.4961** 38.000	**.12** 3.0	**4T-JHM516810**	**5.5118** 140.000	**1.2402** 31.500	**.10** 2.5	**1.5354** 39.000
4T-HM518400 SERIES								
4T-HM518445	**3.5000** 88.900	**1.5625** 39.688	**.25** 6.4	**4T-HM518410**	**6.0000** 152.400	**1.1875** 30.163	**.13** 3.3	**1.5625** 39.688
4T-HM522600 SERIES								
* **4T-JHM522649**	**4.3307** 110.000	**1.8110** 46.000	**.12** 3.0	**4T-JHM522610**	**7.0866** 180.000	**1.4961** 38.000	**.10** 2.5	**1.8504** 47.000
4T-LM603000 SERIES								
4T-LM603049	**1.7812** 45.242	**.7812** 19.842	**.14** 3.5	**4T-LM603011**	**3.0625** 77.788	**.5937** 15.080	**.03** .8	**.7812** 19.842
				4T-LM603012	**3.0625** 77.788	**.6562** 16.667	**.03** .8	**.8437** 21.430
4T-LM612900 SERIES								
* **4T-JM612949**	**2.7559** 70.000	**1.1417** 29.000	**.12** 3.0	**4T-JM612910**	**4.5276** 115.000	**.9055** 23.000	**.10** 2.5	**1.1417** 29.000
4T-HM617000 SERIES								
4T-HM617049	**3.3750** 85.725	**1.6875** 42.862	**.19** 4.8	**4T-HM617010**	**5.5960** 142.138	**1.3438** 34.133	**.13** 3.3	**1.6875** 42.862
4T-M704600 SERIES								
* **4T-JLM704649**	**1.9685** 50.000	**.8661** 22.000	**.14** 3.5	**4T-JLM704610**	**3.3071** 84.000	**.6890** 17.500	**.06** 1.5	**.8661** 22.000
4T-LM710900 SERIES								
* **4T-JLM710949**	**2.5591** 65.000	**.9055** 23.000	**.12** 3.0	**4T-JLM710910**	**4.1339** 105.000	**.7283** 18.500	**.04** 1.0	**.9449** 24.000
4T-M714200 SERIES								
* **4T-JM714249**	**2.9528** 75.000	**1.1614** 29.500	**.12** 3.0	**4T-JM714210**	**4.7244** 120.000	**.9843** 25.000	**.10** 2.5	**1.2205** 31.000
4T-H715300 SERIES								
4T-H715343	**2.6875** 68.262	**1.8125** 46.038	**.14** 3.5	**4T-H715311**	**5.3750** 136.525	**1.4375** 36.512	**.13** 3.3	**1.8125** 46.038
4T-H715345	**2.8125** 71.438	**1.8125** 46.038	**.14** 3.5	**4T-H715313W**	**5.3750** 136.525	**1.5625** 39.688	**.13** 3.3	**1.9375** 49.213
4T-M716600 SERIES								
* **4T-JM716649**	**3.3465** 85.000	**1.1417** 29.000	**.12** 3.0	**4T-JM716610**	**5.1181** 130.000	**.9449** 24.000	**.10** 2.5	**1.1811** 30.000
4T-M718100 SERIES								
* **4T-JM718149**	**3.5433** 90.000	**1.3386** 34.000	**.12** 3.0	**4T-JM718110**	**5.7087** 145.000	**1.0630** 27.000	**.10** 2.5	**1.3780** 35.00

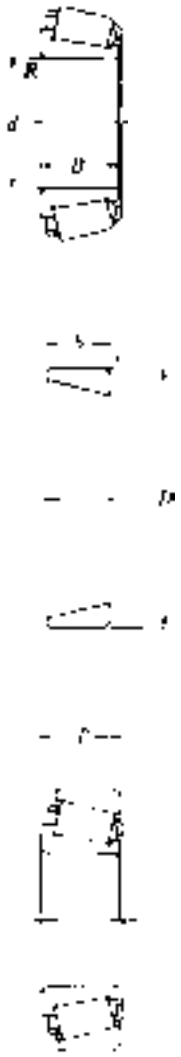

These maximum fillet radii will be cleared by the cone or cup radii.

* For 'J' prefix part tolerances see Table 8 Page 254

Key way on backface

NTN

SERIES 4T

Units: **INCHES**
Millimeters

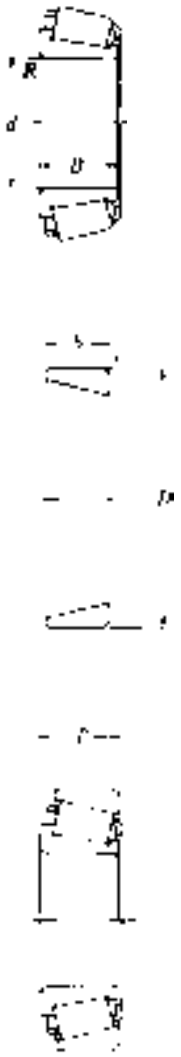

TAPERED ROLLER BEARINGS

Cone Number	Bore *d*	Cone Width *B*	Max. shaft fillet radius *R*	Cup Number	O.D. *D*	Cup Width *b*	Max. housing fillet radius *r*	Overall Width *T*
4T-M719100 SERIES								
* **4T-JM719149**	**3.7402** 95.000	**1.3386** 34.000	**.12** 3.0	**4T-JM719113**	**5.9055** 150.000	**1.0630** 27.000	**.10** 2.5	**1.3780** 35.000
4T-HM720200 SERIES								
* **4T-JHM720249**	**3.9370** 100.000	**1.5748** 40.000	**.12** 3.0	**4T-JHM720210**	**6.2992** 160.000	**1.2598** 32.000	**.10** 2.5	**1.6142** 41.000
4T-M736100 SERIES								
* **4T-JM736149**	**7.0866** 180.000	**1.7717** 45.000	**.12** 3.0	**4T-JM736110**	**9.8425** 250.000	**1.4567** 37.000	**.10** 2.5	**1.8504** 47.000
4T-LM739700 SERIES								
4T-LM739749	**7.7500** 196.850	**1.5625** 39.688	**.14** 3.5	**4T-LM739710**	**10.1250** 257.175	**1.1875** 30.162	**.13** 3.3	**1.5625** 39.688
4T-HM801300 SERIES								
4T-HM801346	**1.5000** 38.100	**1.1250** 28.575	**.03** .8	**4T-HM801310**	**3.2500** 82.550	**.9063** 23.020	**.13** 3.3	**1.1563** 29.370
4T-M802000 SERIES								
4T-M802048	**1.6250** 41.275	**1.0100** 25.654	**.14** 3.5	**4T-M802011**	**3.2500** 82.550	**.7950** 20.193	**.13** 3.3	**1.0450** 26.543
4T-HM803100 SERIES								
4T-HM803146	**1.6250** 41.275	**1.1563** 29.370	**.14** 3.5	**4T-HM803110**	**3.5000** 88.900	**.9063** 23.020	**.13** 3.3	**1.1875** 30.162
4T-HM803149	**1.7500** 44.450	**1.1563** 29.370	**.14** 3.5					
4T-M804000 SERIES								
4T-M804049	**1.8750** 47.625	**1.0000** 25.400	**.14** 3.5	**4T-M804010**	**3.5000** 88.900	**.7500** 19.050	**.13** 3.3	**1.0000** 25.400
4T-M804800 SERIES								
4T-HM804846	**1.8750** 47.625	**1.1563** 29.370	**.14** 3.5	**4T-HM804810**	**3.7500** 95.250	**.9063** 23.020	**.13** 3.3	**1.1875** 30.162
4T-HM804848	**1.9060** 48.412	**1.1563** 29.370	**.09** 2.3					
4T-LM806600 SERIES								
4T-LM806649	**2.1250** 53.975	**.7500** 19.050	**.09** 2.3	**4T-LM806610**	**3.5000** 88.900	**.5312** 13.492	**.08** 2.0	**.7500** 19.050
4T-HM807000 SERIES								
4T-HM807040	**1.7500** 44.450	**1.4375** 36.512	**.14** 3.5	**4T-HM807010**	**4.1250** 104.775	**1.1250** 28.575	**.13** 3.3	**1.4375** 36.512
4T-HM807044	**1.9375** 49.212	**1.4375** 36.512	**.14** 3.5					
4T-HM807046	**2.0000** 50.800	**1.4375** 36.512	**.14** 3.5					
4T-HM807049	**2.1250** 53.975	**1.4375** 36.512	**.14** 3.5					
4T-LM813000 SERIES								
* **4T-JLM813049**	**2.7559** 70.000	**.9843** 25.000	**.04** 1.0	**4T-JLM813010**	**4.3307** 110.000	**.8071** 20.500	**.10** 2.5	**1.0236** 26.000
4T-HM813800 SERIES								
4T-HM813840	**2.1875** 55.562	**1.4375** 36.512	**.14** 3.5	**4T-HM813810**	**5.0000** 127.000	**1.0625** 26.988	**.13** 3.3	**1.4375** 36.512
4T-HM813841	**2.3750** 60.325	**1.4375** 36.512	**.14** 3.5					
4T-M822000 SERIES								
* **4T-JM822049**	**4.3307** 110.000	**1.3780** 35.000	**.12** 3.0	**4T-JM822010**	**6.4961** 165.000	**1.0433** 26.500	**.10** 2.5	**1.3780** 35.000
4T-HM903200 SERIES								
4T-HM903249	**1.7500** 44.450	**1.1250** 28.575	**.14** 3.5	**4T-HM903210**	**3.7500** 95.250	**.8750** 22.225	**.03** .8	**1.2188** 30.958
4T-HM903249A	**1.7500** 44.450	**1.1142** 28.300	**.14** 3.5					

These maximum fillet radii will be cleared by the cone or cup radii.

* For 'J' prefix part tolerances see Table 8 Page 254

www.precise-rotation.ru

RATING AT 33.3 RPM FOR 500 HOURS BASED ON AFBMA

TAPERED ROLLER BEARINGS

Series	Basic Load Ratings (lbs) Dynamic C	Static C_o	Series	Basic Load Ratings (lbs) Dynamic C	Static C_o	Series	Basic Load Ratings (lbs) Dynamic C	Static C_o	Series	Basic Load Ratings (lbs) Dynamic C	Static C_o
4T-335	15,300	16,900	4T-6500	69,000	104,000	4T-39500	31,000	43,500	4T-L217800	18,000	31,500
4T-355	15,700	17,800	4T-02400	12,800	15,100	4T-41000	13,100	12,500	4T-HM218200	51,000	76,500
4T-365	17,200	20,400	4T-02800	12,700	15,300	4T-42000	31,000	48,500	4T-HM220100	56,000	85,500
4T-385	17,600	21,700	4T-05000	5,400	5,450	4T-42600	30,500	43,500	4T-LM300800	10,300	14,100
4T-395	20,100	27,000	4T-07000	5,850	6,300	4T-43000	14,700	15,000	4T-H307700	39,000	49,500
4T-415	21,500	24,100	4T-09000	8,600	8,700	4T-44000	15,900	17,500	4T-LM501300	12,600	15,700
4T-435	24,300	29,100	4T-11000	9,550	11,600	4T-L44600	6,500	7,600	4T-LM503300	11,500	16,000
4T-455	25,800	33,000	4T-11500	3,950	3,950	4T-45200	29,200	38,000	4T-HH506300	45,500	58,500
4T-475	28,700	40,000	4T-LM11700	5,350	5,450	4T-L45400	6,300	8,000	4T-LM506800	17,400	24,400
4T-495	29,000	42,500	4T-LM11900	6,350	6,450	4T-46000	23,300	29,500	4T-LM508700	18,700	27,300
4T-525	30,500	37,000	4T-12000	9,850	12,200	4T-46700	57,000	125,000	4T-M511900	26,800	39,000
4T-535	32,000	40,000	4T-12500	8,400	8,750	4T-47600	34,500	53,000	4T-M515600	37,500	56,000
4T-555	35,500	48,500	4T-M12600	8,500	8,750	4T-47800	37,000	59,500	4T-HM515700	45,000	62,500
4T-565	36,500	51,500	4T-LM12700	6,650	7,600	4T-LM48500	10,400	12,600	4T-HM516400	40,000	68,000
4T-575	40,000	59,500	4T-13600	10,700	13,400	4T-48600	53,500	110,000	4T-HM516800	44,500	67,000
4T-595	40,500	62,500	4T-14000	10,800	13,000	4T-49000	25,000	30,000	4T-HM518400	57,000	81,500
4T-615	38,500	48,000	4T-15000	10,500	12,200	4T-49500	24,800	30,500	4T-HM522600	68,500	108,000
4T-635	43,500	59,000	4T-15500	8,900	10,200	4T-52000	42,000	68,000	4T-LM603000	12,900	16,600
4T-655	46,500	66,500	4T-16000	10,800	13,100	4T-55000C	23,400	30,500	4T-M612900	28,000	38,500
4T-675	50,000	77,000	4T-17000	8,750	9,500	4T-56000	43,000	70,500	4T-HM617000	48,500	78,500
4T-745	58,500	81,000	4T-17500	6,000	5,850	4T-59000	32,000	40,000	4T-LM704600	15,700	21,200
4T-755	60,500	86,500	4T-17800	13,400	17,000	4T-65300	42,000	50,500	4T-LM710900	19,200	26,200
4T-795	70,500	116,000	4T-18500	10,300	12,500	4T-LM67000	7,750	9,200	4T-M714200	29,400	44,500
4T-855	85,500	124,000	4T-18600	10,200	12,600	4T-67300	69,500	124,000	4T-H715300	50,500	80,000
4T-935	107,000	156,000	4T-18700	11,100	14,600	4T-L68100	7,950	10,700	4T-M716600	30,500	48,000
4T-1300	9,150	9,600	4T-19000	9,750	11,500	4T-L69300	8,700	11,800	4T-M718100	42,500	62,500
4T-1700	9,600	10,400	4T-21000	9,050	8,700	4T-72000C	34,500	42,500	4T-M719100	40,500	62,500
4T-1900	9,150	10,000	4T-22700	16,900	21,800	4T-78000C	38,500	47,500	4T-HM720200	43,000	69,500
4T-2500	15,500	18,300	4T-23000	10,600	11,400	4T-LM78300	8,350	10,800	4T-M736100	83,000	160,000
4T-2600	14,400	16,300	4T-24700	14,600	18,100	4T-HM81600	7,850	8,150	4T-LM739700	60,500	142,000
4T-2700	16,400	20,300	4T-25500	17,100	22,000	4T-M84200	11,200	13,000	4T-HM801300	19,500	26,300
4T-2900	17,700	23,400	4T-25800	15,900	19,200	4T-M84500	9,500	11,000	4T-M802000	18,100	23,400
4T-3100	19,000	22,000	4T-26800	17,200	21,900	4T-M86600	11,600	14,600	4T-803100	21,000	28,000
4T-3300	21,400	25,100	4T-27800	15,100	18,500	4T-M88000	12,700	16,000	4T-M804000	18,500	22,800
4T-3400	20,900	25,600	4T-28000	12,500	14,200	4T-HM88500	16,200	21,800	4T-HM804800	24,400	33,000
4T-3500	21,200	26,400	4T-28500	18,800	26,100	4T-HM88600	14,600	19,000	4T-LM806600	13,700	18,600
4T-3700	22,900	30,000	4T-28600	19,900	28,700	4T-HM89400	17,500	23,700	4T-HM807000	31,000	42,500
4T-3800	23,600	29,600	4T-28900	20,300	30,000	4T-LM102900	12,200	17,100	4T-LM813000	21,800	33,500
4T-3900	26,800	39,000	4T-29500	20,600	31,500	4T-LM104900	15,700	21,100	4T-HM813800	36,500	51,500
4T-4300	30,500	39,500	4T-29600	21,500	34,000	4T-M201000	14,000	17,800	4T-M822000	43,000	70,500
4T-5300	39,000	52,000	4T-LM29700	9,750	12,800	4T-M205100	23,900	31,500	4T-HM903200	21,600	26,100
4T-5500	43,500	63,500	4T-31500	18,100	21,800	4T-M207000	24,000	32,500			
4T-5700	47,500	74,500	4T-33000	26,200	39,500	4T-H211700	41,500	55,500			
4T-6300	62,500	85,000	4T-33800	24,100	31,000	4T-HM212000	42,000	55,000			
4T-6400	64,500	92,000	4T-34000	20,500	28,600	4T-H212700	46,000	62,500			

NTN BEARING WEIGHTS

Bearing Series → **4T-335 SERIES**

4T-335 / 332 ..... 1.18

Cone Number — Cup Number — Weight (lbs)

TAPERED ROLLER BEARINGS — LBS.

4T-335 SERIES
4T-335 / 332 ..... 1.18
4T-335 / 332A 1.27
4T-336 / 332 ..... 1.03
4T-336 / 332A 1.12
4T-339 / 332 ..... 1.18
4T-339 / 332A 1.27
4T-342 / 332 ..... 1.03
4T-342 / 332A 1.11
4T-342A / 332 ..... 1.12
4T-342A / 332A 1.20
4T-342S / 332 ..... .99
4T-342S / 332A 1.07
4T-344A / 332 ..... 1.06
4T-344A / 332A 1.15

4T-355 SERIES
4T-355 / 352 ..... 1.49
4T-355 / 354A 1.13
4T-355 / 354X 1.13
4T-355X / 352 ..... 1.48
4T-355X / 354A 1.13
4T-355X / 354X 1.13
4T-359A / 352 ..... 1.44
4T-359A / 354A 1.09
4T-359A / 354X 1.08
4T-359S / 352 ..... 1.44
4T-359S / 354A 1.09
4T-359S / 354X 1.09

4T-365 SERIES
4T-366 / 362 ..... 1.20
4T-366 / 362A 1.18
4T-366 / 363 ..... 1.27
4T-368 / 362 ..... 1.18
4T-368 / 362A 1.14
4T-368 / 363 ..... 1.24
4T-368A / 362 ..... 1.16
4T-368A / 362A 1.14
4T-368A / 363 ..... 1.23
4T-368S / 362 ..... 1.15
4T-368S / 362A 1.13
4T-368S / 363 ..... 1.22
4T-369A / 362 ..... 1.26
4T-369A / 362A 1.24
4T-369A / 363 ..... 1.33
4T-369S / 362 ..... 1.27
4T-369S / 362A 1.25
4T-369S / 363 ..... 1.34
4T-370A / 362 ..... 1.16
4T-370A / 362A 1.13
4T-370A / 363 ..... 1.23

4T-385 SERIES
4T-385 / 382 ..... 1.46
4T-385 / 382A 1.36
4T-385 / 382S 1.50
4T-385 / 383A 1.53
4T-385A / 382 ..... 1.59
4T-385A / 382A 1.49
4T-385A / 382S 1.64
4T-385A / 383A 1.66
4T-385X / 382 ..... 1.46
4T-385X / 382A 1.35
4T-385X / 382S 1.50
4T-385X / 383A 1.52
4T-386A / 382 ..... 1.69
4T-386A / 382A 1.59
4T-386A / 382S 1.73
4T-386A / 383A 1.76
4T-387 / 382 ..... 1.39
4T-387 / 382A 1.29
4T-387 / 382S 1.43
4T-387 / 383A 1.46
4T-387A / 382 ..... 1.38
4T-387A / 382A 1.28
4T-387A / 382S 1.43
4T-387A / 383A 1.46
4T-387AS / 382 ..... 1.37
4T-387AS / 382A 1.27
4T-387AS / 382S 1.42
4T-387AS / 383A 1.44
4T-387S / 382 ..... 1.39
4T-387S / 382A 1.29
4T-387S / 382S 1.44
4T-387S / 383A 1.46
4T-388A / 382 ..... 1.37
4T-388A / 382A 1.27
4T-388A / 382S 1.41
4T-388A / 383A 1.44
4T-389A / 382 ..... 1.50
4T-389A / 382A 1.40
4T-389A / 382S 1.54
4T-389A / 383A 1.57

4T-395 SERIES
4T-390 / 393 ..... 2.41
4T-390 / 394A 2.10
4T-390 / 394AS 2.11
4T-395 / 393 ..... 2.17
4T-395 / 394A 1.87
4T-395 / 394AS 1.87
4T-395A / 393 ..... 2.06
4T-395A / 394A 1.75
4T-395A / 394AS 1.75
4T-395S / 393 ..... 2.05
4T-395S / 394A 1.74
4T-395S / 394AS 1.75
4T-396 / 393 ..... 2.64
4T-396 / 394A 2.35
4T-396 / 394AS 2.34
4T-399A / 393 ..... 1.99
4T-399A / 394A 1.68
4T-399A / 394AS 1.69
4T-399AS / 393 ..... 1.97
4T-399AS / 394A 1.67
4T-399AS / 394AS 1.67

4T-415 SERIES
4T-418 / 412 ..... 1.77
4T-418 / 414 ..... 1.85
4T-420 / 412 ..... 1.72
4T-420 / 414 ..... 1.79

4T-435 SERIES
4T-438 / 432A 2.11
4T-443 / 432A 2.52

4T-455 SERIES
4T-455 / 453 ..... 2.86
4T-455 / 453A 2.73
4T-455 / 453X 2.62
4T-455 / 454 ..... 3.01
4T-461 / 453 ..... 3.15
4T-461 / 453A 3.02
4T-461 / 453X 2.92
4T-461 / 454 ..... 3.31
4T-462 / 453 ..... 2.58
4T-462 / 453A 2.45
4T-462 / 453X 2.34
4T-462 / 454 ..... 2.74
4T-467 / 453 ..... 2.98
4T-467 / 453A 2.85
4T-467 / 453X 2.73
4T-467 / 454 ..... 3.14
4T-469 / 453 ..... 2.57
4T-469 / 453A 2.45
4T-469 / 453X 2.34
4T-469 / 454 ..... 2.73

4T-475 SERIES
4T-480 / 472 ..... 3.02
4T-480 / 472A 2.96
4T-480 / 472X 3.34
4T-482 / 472 ..... 2.93
4T-482 / 472A 2.87
4T-482 / 472X 3.26
4T-483 / 472 ..... 3.26
4T-483 / 472A 3.21
4T-483 / 472X 3.59
4T-484 / 472 ..... 2.93
4T-484 / 472A 2.87
4T-484 / 472X 3.26

4T-495 SERIES
4T-495 / 492A 3.35
4T-495 / 493 ..... 3.60
4T-495A / 492A 3.75
4T-495A / 493 ..... 4.03
4T-495AX / 492A 3.73
4T-495AX / 493 ..... 4.01
4T-496 / 492A 3.45
4T-496 / 493 ..... 3.73
4T-497 / 492A 3.15
4T-497 / 493 ..... 3.42
4T-498 / 492A 3.24
4T-498 / 493 ..... 3.53

4T-525 SERIES
4T-526 / 522 ..... 3.16
4T-527 / 522 ..... 3.02
4T-528 / 522 ..... 2.87
4T-529 / 522 ..... 2.73

4T-535 SERIES
4T-535 / 532A 4.09
4T-535 / 532X 3.71
4T-536 / 532A 3.94
4T-536 / 532X 3.56
4T-537 / 532A 3.79
4T-537 / 532X 3.42
4T-539 / 532A 3.64
4T-539 / 532X 3.24
4T-539A / 532A 3.62
4T-539A / 532X 3.24
4T-543 / 532A 4.28
4T-543 / 532X 3.90

4T-555 SERIES
4T-555S / 552 ..... 4.91
4T-555S / 552A 4.81
4T-555S / 553A 4.93
4T-555S / 553X 4.65
4T-557A / 552 ..... 4.69
4T-557A / 552A 4.58
4T-557A / 553A 4.70
4T-557A / 553X 4.42
4T-557S / 552 ..... 5.09
4T-557S / 552A 4.98
4T-557S / 553A 5.10
4T-557S / 553X 4.82
4T-559 / 552 ..... 4.53
4T-559 / 552A 4.43
4T-559 / 553A 4.54
4T-559 / 553X 4.27
4T-560 / 552 ..... 4.33
4T-560 / 552A 4.23
4T-560 / 553A 4.34
4T-560 / 553X 4.06

4T-565 SERIES
4T-567 / 563 ..... 4.01

4T-575 SERIES
4T-575 / 572 ..... 5.35
4T-575 / 572X 5.32
4T-575S / 572 ..... 5.32
4T-575S / 572X 5.28
4T-576 / 572 ..... 5.58
4T-576 / 572X 5.55
4T-577 / 572 ..... 5.47
4T-577 / 572X 5.43
4T-580 / 572 ..... 4.85
4T-580 / 572X 4.82
4T-581 / 572 ..... 4.98
4T-581 / 572X 4.95
4T-582 / 572 ..... 4.81
4T-582 / 572X 4.78

4T-595 SERIES
4T-593 / 592 ..... 6.25
4T-593 / 592A 6.13
4T-593 / 592XS 5.19
4T-593A / 592 ..... 6.21
4T-593A / 592A 6.08
4T-593A / 592XS 5.16
4T-594 / 592 ..... 5.67
4T-594 / 592A 5.53
4T-594 / 592XS 4.61
4T-594A / 592 ..... 5.65
4T-594A / 592A 5.53
4T-594A / 592XS 4.61
4T-595 / 592 ..... 6.79
4T-595 / 592A 6.66
4T-595 / 592XS 5.73
4T-596 / 592 ..... 6.52
4T-596 / 592A 6.39
4T-596 / 592XS 5.47
4T-598 / 592 ..... 5.96
4T-598 / 592A 5.84
4T-598 / 592XS 4.91
4T-598A / 592 ..... 5.93
4T-598A / 592A 5.80
4T-598A / 592XS 4.87

4T-615 SERIES
4T-620 / 612 ..... 5.64
4T-621 / 612 ..... 4.87
4T-623 / 612 ..... 4.67

4T-635 SERIES
4T-635 / 632 ..... 6.71
4T-635 / 633 ..... 5.98
4T-639 / 632 ..... 6.28
4T-639 / 633 ..... 5.55
4T-643 / 632 ..... 5.80
4T-643 / 633 ..... 5.08
4T-645 / 632 ..... 5.65
4T-645 / 633 ..... 4.93

4T-655 SERIES
4T-659 / 652 ..... 7.53
4T-662 / 652 ..... 6.98
4T-662 / 653 ..... 6.17
4T-665A / 652 ..... 6.63
4T-665 / 652 ..... 6.66

4T-675 SERIES
4T-681 / 672 ..... 8.53
4T-681A / 672 ..... 8.51
4T-683 / 672 ..... 8.20
4T-683XA / 672 ..... 8.19
4T-685 / 672 ..... 7.85
4T-687 / 672 ..... 7.50

4T-745 SERIES
4T-745A / 742 ..... 8.64
4T-745A / 743 ..... 8.60
4T-748 / 742 ..... 7.70
4T-748 / 743 ..... 7.63
4T-749 / 742 ..... 7.17
4T-749 / 743 ..... 7.10

Continued next page …

TAPERED ROLLER BEARINGS — LBS.

4T-749A / 742 ....7.43
4T-749A / 743 ....7.37
4T-749S / 742 ....7.14
4T-749S / 743 ....7.09
4T-750A / 742 ....7.39
4T-750A / 743 ....7.33

4T-755 SERIES
4T-756A / 752 ....10.03
4T-759 / 752....9.02
4T-760 / 752....8.84
4T-766 / 752....8.99

4T-795 SERIES
4T-797 / 792....12.50

4T-855 SERIES
4T-855 / 854....17.33
4T-857 / 854....16.88
4T-861 / 854....15.43
4T-864 / 854....16.41
4T-866 / 854....16.00
4T-869 / 854....17.55

4T-935 SERIES
4T-936 / 932....23.59
4T-938 / 932....22.27

4T-1300 SERIES
4T-1380 / 1328....44

4T-1700 SERIES
4T-1755 / 1729.... .56
4T-1755 / 1729X .... .57
4T-1779 / 1729.... .54
4T-1779 / 1729X .... .55
4T-1780 / 1729.... .52
4T-1780 / 1729X .... .53

4T-1900 SERIES
4T-1986 / 1922.... .53
4T-1988 / 1922.... .48

4T-2500 SERIES
4T-2580 / 2523....1.00
4T-2585 / 2523.... .96

4T-2600 SERIES
4T-2690 / 2631.... .90

4T-2700 SERIES
4T-2776 / 2720....1.09
4T-2776 / 2729....1.10
4T-2776 / 2735X .... .97
4T-2777 / 2720....1.08
4T-2777 / 2729....1.09
4T-2777 / 2735X .... .97
4T-2780 / 2720....1.14
4T-2780 / 2729....1.15
4T-2780 / 2735X 1.03
4T-2788 / 2720....1.09
4T-2788 / 2729....1.10
4T-2788 / 2735X .... .98
4T-2789 / 2720....1.05
4T-2789 / 2729....1.06
4T-2789 / 2735X .... .93
4T-2790 / 2720....1.21
4T-2790 / 2729....1.22
4T-2790 / 2735X 1.10
4T-2793 / 2720....1.18
4T-2793 / 2729....1.19
4T-2793 / 2735X 1.06
4T-2794 / 2720....1.13
4T-2794 / 2729....1.14
4T-2794 / 2735X 1.02
4T-2796 / 2720....1.17
4T-2796 / 2729....1.18
4T-2796 / 2735X 1.06

4T-2900 SERIES
4T-2984 / 2924....1.36

4T-3100 SERIES
4T-3193 / 3120....1.32
4T-3196 / 3120....1.28

4T-3300 SERIES
4T-3379 / 3320....1.61
4T-3379 / 3325....1.61
4T-3384 / 3320....1.43
4T-3384 / 3325....1.42
4T-3386 / 3320....1.47
4T-3386 / 3325....1.47

4T-3400 SERIES
4T-3478 / 3420....1.60
4T-3479 / 3420....1.56
4T-3482 / 3420....1.61
4T-3490 / 3420....1.51

4T-3500 SERIES
4T-3578 / 3520....1.54
4T-3578 / 3525....1.72
4T-3578A / 3520 ....1.53
4T-3578A / 3525 ....1.71
4T-3580 / 3520....1.77
4T-3580 / 3525....1.94
4T-3585 / 3520....1.66
4T-3585 / 3525....1.84
4T-3586 / 3520....1.51
4T-3586 / 3525....1.69

4T-3700 SERIES
4T-3767 / 3720....1.81
4T-3767 / 3730....1.81
4T-3775 / 3720....1.88
4T-3775 / 3730....1.89
4T-3776 / 3720....2.10
4T-3776 / 3730....2.11
4T-3778 / 3720....1.98
4T-3778 / 3730....1.99
4T-3779 / 3720....2.00
4T-3779 / 3730....2.01
4T-3780 / 3720....1.87
4T-3780 / 3730....1.88
4T-3781 / 3720....1.93
4T-3781 / 3730....1.94
4T-3782 / 3720....2.12
4T-3782 / 3730....2.13
4T-3783 / 3720....2.10
4T-3783 / 3730....2.11
4T-3784 / 3720....1.85
4T-3784 / 3730....1.86
4T-3795 / 3720....1.86
4T-3795 / 3730....1.87

4T-3800 SERIES
4T-3872 / 3820....1.98
4T-3872A / 3820 ....1.99
4T-3877 / 3820....1.79
4T-3880 / 3820....1.79

4T-3900 SERIES
4T-3979 / 3920....3.09
4T-3979 / 3925....3.12
4T-3982 / 3920....2.78
4T-3982 / 3925....2.80
4T-3984 / 3920....2.60
4T-3984 / 3925....2.62
4T-3994 / 3920....2.60
4T-3994 / 3925....2.61

4T-4300 SERIES
4T-4388 / 4335....2.76

4T-5300 SERIES
4T-5356 / 5335....4.14
4T-5358 / 5335....3.96
4T-5361 / 5335....3.95
4T-5395 / 5335....3.86

4T-5500 SERIES
4T-5562 / 5535....6.16
4T-5565 / 5535....6.02
4T-5566 / 5535....5.71
4T-5578 / 5535....5.82
4T-5582 / 5535....5.39
4T-5583 / 5535....5.38
4T-5584 / 5535....5.14
4T-5595 / 5535....4.96

4T-5700 SERIES
4T-5760 / 5735....6.06
4T-5795 / 5735....5.90

4T-6300 SERIES
4T-6361 / 6320....8.69
4T-6376 / 6320....8.66
4T-6379 / 6320....8.18
4T-6381 / 6320....9.12
4T-6382 / 6320....8.35
4T-6386 / 6320....8.02
4T-6389 / 6320....8.00

4T-6400 SERIES
4T-6461A / 6420 ....9.33

4T-6500 SERIES
4T-6559 / 6535....11.24
4T-6576 / 6535....11.99
4T-6580 / 6535....10.42

4T-02400 SERIES
4T-02474 / 02420.... .90
4T-02475 / 02420.... .84

4T-02800 SERIES
4T-02872 / 02820....1.06

4T-05000 SERIES
4T-05062 / 05185.... .29
4T-05079 / 05185.... .26

4T-07000 SERIES
4T-07079 / 07196.... .30
4T-07079 / 07204.... .36
4T-07079 / 07210X .... .34
4T-07087 / 07196.... .29
4T-07087 / 07204.... .34
4T-07087 / 07210X .... .32
4T-07093 / 07196.... .27
4T-07093 / 07204.... .33
4T-07093 / 07210X .... .30
4T-07100 / 07196.... .26
4T-07100 / 07204.... .32
4T-07100 / 07210X .... .29

4T-09000 SERIES
4T-09067 / 09194.... .43
4T-09067 / 09195.... .39
4T-09067 / 09196.... .44
4T-09074 / 09194.... .45
4T-09074 / 09195.... .41
4T-09074 / 09196.... .46
4T-09078 / 09194.... .45
4T-09078 / 09195.... .41
4T-09078 / 09196.... .46

4T-11000 SERIES
4T-11162 / 11300.... .74

4T-11500 SERIES
4T-11590 / 11520.... .23

4T-LM11700 SERIES
4T-LM11749 / LM11710.... .19

4T-LM11900 SERIES
4T-LM11949 / LM11910.... .27

4T-12000 SERIES
4T-12175 / 12303.... .68

4T-12500 SERIES
4T-12580 / 12520.... .40

4T-M12600 SERIES
4T-M12649 / M12610.... .37

4T-LM12700 SERIES
4T-LM12749 / LM12710.... .26
4T-LM12749 / LM12711.... .27

4T-13600 SERIES
4T-13685 / 13620.... .65
4T-13685 / 13621.... .65
4T-13686 / 13620.... .84
4T-13686 / 13621.... .84
4T-13687 / 13620.... .66
4T-13687 / 13621.... .65

4T-14000 SERIES
4T-14116 / 14274.... .81
4T-14116 / 14276.... .82
4T-14116 / 14282.... .88
4T-14116 / 14283.... .99
4T-14117A / 14274 .... .81
4T-14117A / 14276 .... .81
4T-14117A / 14282 .... .88
4T-14117A / 14283 .... .98
4T-14118 / 14274.... .81
4T-14118 / 14276.... .82
4T-14118 / 14282.... .88
4T-14118 / 14283.... .98
4T-14124 / 14274.... .78
4T-14124 / 14276.... .79
4T-14124 / 14282.... .86
4T-14124 / 14283.... .96
4T-14125A / 14274 .... .78
4T-14125A / 14276 .... .78
4T-14125A / 14282 .... .85
4T-14125A / 14283 .... .95
4T-14131 / 14274.... .76
4T-14131 / 14276.... .76
4T-14131 / 14282.... .83
4T-14131 / 14283.... .93
4T-14136A / 14274 .... .86
4T-14136A / 14276 .... .87
4T-14136A / 14282 .... .93
4T-14136A / 14283 ....1.04
4T-14137A / 14274 .... .73
4T-14137A / 14276 .... .73
4T-14137A / 14282 .... .80
4T-14137A / 14283 .... .90
4T-14138A / 14274 .... .72
4T-14138A / 14276 .... .73
4T-14138A / 14282 .... .79
4T-14138A / 14283 .... .90

4T-15000 SERIES
4T-15100 / 15243.... .66
4T-15100 / 15244.... .69
4T-15100 / 15245.... .66
4T-15100 / 15250.... .73
4T-15100 / 15250X .... .73
4T-15101 / 15243.... .66
4T-15101 / 15244.... .70
4T-15101 / 15245.... .67
4T-15101 / 15250.... .73
4T-15101 / 15250X .... .73
4T-15103S / 15243 .... .64

Continued next page …

NTN BEARING WEIGHTS

Bearing Series → **4T-335 SERIES**

4T-335 / 332 ..... 1.18

Cone Number — Cup Number — Weight (lbs)

TAPERED ROLLER BEARINGS — LBS.

4T-15103S / 15244 ..... .68
4T-15103S / 15245 ..... .65
4T-15103S / 15250 ..... .72
4T-15103S / 15250X ..... .72
4T-15106 / 15243 ..... .64
4T-15106 / 15244 ..... .67
4T-15106 / 15245 ..... .64
4T-15106 / 15250 ..... .71
4T-15106 / 15250X ..... .71
4T-15113 / 15243 ..... .62
4T-15113 / 15244 ..... .65
4T-15113 / 15245 ..... .62
4T-15113 / 15250 ..... .69
4T-15113 / 15250X ..... .69
4T-15116 / 15243 ..... .59
4T-15116 / 15244 ..... .62
4T-15116 / 15245 ..... .59
4T-15116 / 15250 ..... .66
4T-15116 / 15250X ..... .66
4T-15117 / 15243 ..... .59
4T-15117 / 15244 ..... .62
4T-15117 / 15245 ..... .59
4T-15117 / 15250 ..... .67
4T-15117 / 15250X ..... .66
4T-15118 / 15243 ..... .58
4T-15118 / 15244 ..... .62
4T-15118 / 15245 ..... .58
4T-15118 / 15250 ..... .66
4T-15118 / 15250X ..... .66
4T-15119 / 15243 ..... .59
4T-15119 / 15244 ..... .62
4T-15119 / 15245 ..... .59
4T-15119 / 15250 ..... .66
4T-15119 / 15250X ..... .66
4T-15120 / 15243 ..... .59
4T-15120 / 15244 ..... .62
4T-15120 / 15245 ..... .59
4T-15120 / 15250 ..... .66
4T-15120 / 15250X ..... .66
4T-15123 / 15243 ..... .54
4T-15123 / 15244 ..... .58
4T-15123 / 15245 ..... .54
4T-15123 / 15250 ..... .62
4T-15123 / 15250X ..... .62
4T-15125 / 15243 ..... .56
4T-12125 / 15244 ..... .59
4T-15125 / 15245 ..... .56
4T-15125 / 15250 ..... .63
4T-15125 / 15250X ..... .63
4T-15126 / 15243 ..... .56
4T-15126 / 15244 ..... .60
4T-15126 / 15245 ..... .56
4T-15126 / 15250 ..... .63
4T-15126 / 15250X ..... .63

4T-15500 SERIES
4T-15578 / 15520 ..... .48
4T-15580 / 15520 ..... .46
4T-15590 / 15520 ..... .43

4T-16000 SERIES
4T-16150 / 16282 ..... .72
4T-16150 / 16284 ..... .77

4T-17000 SERIES
4T-17118 / 17244 ..... .50

4T-17500 SERIES
4T-17580 / 17520 ..... .27

4T-17800 SERIES
4T-17887 / 17831 ..... .89

4T-18500 SERIES
4T-18590 / 18520 ..... .62

4T-18600 SERIES
4T-18685 / 18620 ..... .76
4T-18690 / 18620 ..... .73

4T-18700 SERIES
4T-18780 / 18720 ..... .94
4T-18790 / 18720 ..... .82

4T-19000 SERIES
4T-19150 / 19268 ..... .53
4T-19150 / 19268X ..... .62
4T-19150 / 19283X ..... .66

4T-21000 SERIES
4T-21075 / 21212 ..... .55

4T-22700 SERIES
4T-22780 / 22720 ..... 1.36

4T-23000 SERIES
4T-23100 / 23250X ..... .73

4T-24700 SERIES
4T-24780 / 24720 ..... .95
4T-24780 / 24721 ..... 1.04
4T-24780 / 24722 ..... .95

4T-25500 SERIES
4T-25577 / 25519 ..... 1.26
4T-25577 / 25520 ..... 1.27
4T-25577 / 25521 ..... 1.28
4T-25577 / 25522 ..... 1.29
4T-25577 / 25523 ..... 1.38
4T-25577 / 25526 ..... 1.37
4T-25578 / 25519 ..... 1.27
4T-25578 / 25520 ..... 1.29
4T-25578 / 25521 ..... 1.28
4T-25578 / 25522 ..... 1.24
4T-25578 / 25523 ..... 1.39
4T-25578 / 25526 ..... 1.46
4T-25580 / 25519 ..... 1.21
4T-25580 / 25520 ..... 1.23
4T-25580 / 25521 ..... 1.23
4T-25580 / 25522 ..... 1.24
4T-25580 / 25523 ..... 1.33
4T-25580 / 25526 ..... 1.32
4T-25583 / 25519 ..... 1.20
4T-25583 / 25520 ..... 1.20
4T-25583 / 25521 ..... 1.20
4T-25583 / 25522 ..... 1.20
4T-25583 / 25523 ..... 1.20
4T-25583 / 25526 ..... 1.20
4T-25584 / 25519 ..... 1.20
4T-25584 / 25520 ..... 1.22
4T-25584 / 25521 ..... 1.22
4T-25584 / 25522 ..... 1.23
4T-25584 / 25523 ..... 1.32
4T-25584 / 25526 ..... 1.32
4T-25590 / 25519 ..... 1.18
4T-25590 / 25520 ..... 1.20
4T-25590 / 25521 ..... 1.19
4T-25590 / 25522 ..... 1.19
4T-25590 / 25523 ..... 1.20
4T-25590 / 25526 ..... 1.24

4T-25800 SERIES
4T-25877 / 25820 ..... 1.02
4T-25877 / 25821 ..... 1.03
4T-25878 / 25820 ..... 1.03
4T-25878 / 25821 ..... 1.04
4T-25880 / 25820 ..... 1.00
4T-25880 / 25821 ..... 1.01

4T-26800 SERIES
4T-26878 / 26820 ..... 1.34
4T-26878 / 26822 ..... 1.27
4T-26878 / 26823 ..... 1.17
4T-26878 / 26830 ..... 1.35
4T-26881 / 26820 ..... 1.29
4T-26881 / 26822 ..... 1.22
4T-26881 / 26823 ..... 1.12
4T-26881 / 26830 ..... 1.30
4T-26882 / 26820 ..... 1.23
4T-26882 / 26822 ..... 1.17
4T-26882 / 26823 ..... 1.08
4T-26882 / 26830 ..... 1.26
4T-26883 / 26820 ..... 1.42
4T-26883 / 26822 ..... 1.35
4T-26883 / 26823 ..... 1.25
4T-26883 / 26830 ..... 1.43
4T-26884 / 26820 ..... 1.20
4T-26884 / 26822 ..... 1.12
4T-26884 / 26823 ..... 1.03
4T-26884 / 26830 ..... 1.21
4T-26886 / 26820 ..... 1.20
4T-26886 / 26822 ..... 1.13
4T-26886 / 26823 ..... 1.04
4T-26886 / 26830 ..... 1.21

4T-27800 SERIES
4T-27881 / 27820 ..... 1.23

4T-28000 SERIES
4T-28150 / 28300 ..... .89

4T-28500 SERIES
4T-28580 / 28520 ..... 1.45
4T-28580 / 28521 ..... 1.55
4T-28584 / 28520 ..... 1.39
4T-28584 / 28521 ..... 1.01

4T-28600 SERIES
4T-28678 / 28621 ..... 1.84
4T-28678 / 28622 ..... 1.88
4T-28682 / 28621 ..... 1.61
4T-28682 / 28622 ..... 1.65

4T-28900 SERIES
4T-28980 / 28920 ..... 1.80
4T-28980 / 28921 ..... 1.71
4T-28985 / 28920 ..... 1.78
4T-28985 / 28921 ..... 1.70

4T-29500 SERIES
4T-29585 / 29520 ..... 2.04

4T-29600 SERIES
4T-29675 / 29620 ..... 2.09
4T-29675 / 29630 ..... 2.58
4T-29685 / 29620 ..... 1.92
4T-29685 / 29630 ..... 2.41

4T-LM29700 SERIES
4T-LM29748 / LM29710 ..... .51

4T-31500 SERIES
4T-31593 / 31520 ..... 1.38
4T-31594 / 31520 ..... 1.38
4T-31597 / 31520 ..... 1.33

4T-33000 SERIES
4T-33225 / 33462 ..... 3.48
4T-33225 / 33472 ..... 3.66
4T-33262 / 33462 ..... 2.99
4T-33262 / 33472 ..... 3.18
4T-33275 / 33462 ..... 2.82
4T-33275 / 33472 ..... 3.00
4T-33281 / 33462 ..... 2.73
4T-33281 / 33472 ..... 2.91
4T-33287 / 33462 ..... 2.63
4T-33287 / 33472 ..... 2.82

4T-33800 SERIES
4T-33891 / 33821 ..... 1.87

4T-34000 SERIES
4T-34306 / 34478 ..... 2.08
4T-34306 / 34492A 2.22

4T-39500 SERIES
4T-39581 / 39520 ..... 3.11
4T-39585 / 39520 ..... 2.80
4T-39590 / 39520 ..... 2.63

4T-41000 SERIES
4T-41125 / 41286 ..... 1.05

4T-42000 SERIES
4T-42346 / 42584 ..... 4.37
4T-42346 / 42587 ..... 4.72
4T-42350 / 42584 ..... 4.32
4T-42350 / 42587 ..... 4.65
4T-42368 / 42584 ..... 3.97
4T-42368 / 42587 ..... 4.31
4T-42375 / 42584 ..... 3.86
4T-42375 / 42587 ..... 4.19
4T-42381 / 42584 ..... 3.73
4T-42381 / 42587 ..... 4.07

4T-42600 SERIES
4T-42687 / 42620 ..... 3.22

4T-43000 SERIES
4T-43131 / 43300 ..... 1.10

4T-44000 SERIES
4T-44150 / 44348 ..... 1.57

4T-L44600 SERIES
4T-L44640 / L44610 ..... .30
4T-L44643 / L44610 ..... .29
4T-L44649 / L44610 ..... .27

4T-45200 SERIES
4T-45282 / 45220 ..... 2.84
4T-45284 / 45220 ..... 2.69

4T-L45400 SERIES
4T-L45449 / L45410 ..... .25

4T-46000 SERIES
4T-46143 / 46368 ..... 2.56
4T-46143 / 46369 ..... 2.57
4T-46162 / 46368 ..... 2.40
4T-46162 / 46369 ..... 2.42

4T-46700 SERIES
4T-46790 / 46720 ..... 10.32

4T-47600 SERIES
4T-47678 / 47620 ..... 4.23
4T-47678 / 47623A 4.25
4T-47679 / 47620 ..... 4.26
4T-47679 / 47623A 4.28
4T-47681 / 47620 ..... 3.92
4T-47681 / 47623A 4.28
4T-47686 / 47620 ..... 3.79
4T-47686 / 47623A 3.81
4T-47687 / 47620 ..... 3.77
4T-47687 / 47623A 3.79

4T-47800 SERIES
4T-47890 / 47820 ..... 4.59
4T-47896 / 47820 ..... 4.30

4T-LM48500 SERIES
4T-LM48548 / LM48510 ..... .55

4T-48600 SERIES
4T-48684 / 48620 ..... 8.49

4T-49000 SERIES
4T-49175 / 49368 ..... 2.22

4T-49500 SERIES
4T-49585 / 49520 ..... 2.49

Continued next page …

NTN

BEARING WEIGHTS

TAPERED ROLLER BEARINGS — LBS.

4T-52000 SERIES
4T-52387 / 52618.....5.78
4T-52387 / 52638.....6.70
4T-52400 / 52618.....5.47
4T-52400 / 52638.....6.37
4T-52401 / 52618.....5.41
4T-52401 / 52638.....6.32

4T-55000C SERIES
4T-55175C / 55437.....3.20
4T-55200C / 55437.....2.97

4T-56000 SERIES
4T-56425 / 56650.....5.93

4T-59000 SERIES
4T-59162 / 59429.....3.85
4T-59200 / 59429.....3.41

4T-65300 SERIES
4T-65390 / 65320.....4.92

4T-LM67000 SERIES
4T-LM67048 / LM67010..... .40

4T-67300 SERIES
4T-67388 / 67322.....11.24
4T-67388 / 67324.....13.08

4T-L68100 SERIES
4T-L68149 / L68110..... .38
4T-L68149 / L68111..... .39

4T-L69300 SERIES
4T-JL69349 / JL69310..... .44

4T-72000C SERIES
4T-72188C / 72487.....4.76
4T-72200C / 72487.....4.63

4T-78000C SERIES
4T-78215C / 78551.....6.09
4T-78225C / 78551.....5.93
4T-78238C / 78551.....5.74

4T-LM78300 SERIES
4T-LM78349 / LM78310A..... .46

4T-HM81600 SERIES
4T-HM81649 / HM81610..... .43

4T-M84200 SERIES
4T-M84249 / M84210..... .71

4T-M84500 SERIES
4T-M84548 / M84510..... .53

4T-M86600 SERIES
4T-M86649 / M86610..... .74

4T-M88000 SERIES
4T-M88048 / M88010..... .83

4T-HM88500 SERIES
4T-HM88542 / HM88510.....1.37
4T-HM88547 / HM88510.....1.33

4T-HM88600 SERIES
4T-HM88649 / HM88610.....1.08
4T-HM88649 / HM88611.....1.12

4T-HM89400 SERIES
4T-HM89443 / HM89410.....1.47
4T-HM89443 / HM89411.....1.48
4T-HM89446 / HM89410.....1.42
4T-HM89446 / HM89411.....1.44
4T-HM89448 / HM89410.....1.39
4T-HM89448 / HM89411.....1.40
4T-HM89449 / HM89410.....1.37
4T-HM89449 / HM89411.....1.39

4T-LM102900 SERIES
4T-LM102949 / LM102910..... .68

4T-LM104900 SERIES
4T-LM104949 / LM104911..... .92
4T-JLM104948 / JLM104910..... .93
4T-LM104949 / LM104911..... .92
4T-JLM104948 / JLM104910..... .93

4T-M201000 SERIES
4T-M201047 / M201011..... .95

4T-M205100 SERIES
4T-JM205149 / JM205110.....1.66

4T-M20700 SERIES
4T-JM207049 / JM207010.....1.81

4T-H211700 SERIES
4T-JH211749 / JH21170.....4.19

4T-HM212000 SERIES
4T-HM212044 / HM212010.....4.49
4T-HM212044 / HM212011.....4.45
4T-HM212046 / HM212010.....4.32
4T-HM212046 / HM212011.....4.30
4T-HM212047 / HM212010.....4.29
4T-HM212047 / HM212011.....4.28
4T-HM212049 / HM212010.....4.11
4T-HM212049 / HM212011.....4.09

4T-H212700 SERIES
4T-H212749 / 212710.....4.80

4T-L217800 SERIES
4T-L217849 / L217810.....1.63

4T-HM218200 SERIES
4T-HM218248 / HM218210.....5.62

4T-HM220100 SERIES
4T-HM220149 / HM220110.....6.31

4T-LM300800 SERIES
4T-LM300849 / LM300811..... .53

4T-H307700 SERIES
4T-JH307749 / JH307710.....3.77

4T-LM501300 SERIES
4T-LM501349 / LM501310..... .74
4T-LM501349 / LM501314..... .78

4T-LM503300 SERIES
4T-LM503349 / LM503310..... .66

4T-HH506300 SERIES
4T-HH506348 / HH506310.....5.14

4T-LM506800 SERIES
4T-JLM506849 / JLM506810.....1.23

4T-LM508700 SERIES
4T-JLM508748 / JLM508710.....1.34

4T-M511900 SERIES
4T-JM511946 / JM511910.....2.38

4T-HM516400 SERIES
4T-HM516448 / HM516410.....4.76

4T-M515600 SERIES
4T-JM515649 / JM515610.....3.81

4T-HM515700 SERIES
4T-HM515745 / HM515716.....6.75

4T-HM516800 SERIES
4T-JHM516849 / JHM516810.....5.07

4T-HM518400 SERIES
4T-HM518445 / HM518410.....6.39

4T-HM522600 SERIES
4T-JHM522649 / JHM522610....10.20

4T-LM603000 SERIES
4T-LM603049 / LM603011..... .82

4T-LM612900 SERIES
4T-JM612949 / JM612910.....2.49

4T-HM617000 SERIES
4T-HM617049 / HM617010.....5.93

4T-M704600 SERIES
4T-JLM704649 / JLM704610.....1.03

4T-LM710900 SERIES
4T-JLM710949 / JLM710910.....1.64

4T-M714200 SERIES
4T-JM714249 / JM714210.....2.84

4T-H715300 SERIES
4T-H715343 / H715311.....7.13
4T-H715343 / H715313W.....7.35
4T-H715345 / H715311.....6.85
4T-H715345 / H715313W.....7.07

4T-M716600 SERIES
4T-JM716649 / JM716610.....3.06

4T-M718100 SERIES
4T-JM718149 / JM718110.....4.72

4T-M719100 SERIES
4T-JM719149 / JM719113.....4.83

4T-HM720200 SERIES
4T-JHM720249 / JHM720210.....6.70

4T-M736100 SERIES
4T-JM736149 / JM736110.....14.90

4T-LM739700 SERIES
4T-LM739749 / LM739710.....1.17

4T-HM801300 SERIES
4T-HM801346 / HM801310.....1.70

4T-M802000 SERIES
4T-M802048 / M802011.....1.42

4T-HM803100 SERIES
4T-HM803146 / HM803110.....1.98
4T-HM803149 / HM803110.....1.87

4T-M804000 SERIES
4T-M804049 / M804010.....1.45

4T-HM804800 SERIES
4T-HM804846 / HM804810.....2.16
4T-HM804848 / HM804810.....2.13

4T-LM806600 SERIES
4T-LM806649 / LM806610..... .96

4T-HM807000 SERIES
4T-HM\807040 / HM807010.....3.57
4T-HM807044 / HM807010.....3.35
4T-HM807046 / HM807010.....3.29
4T-HM807049 / HM807010.....3.11

4T-LM813000 SERIES
4T-JLM813049 / JLM813010.....1.96

4T-HM813800 SERIES
4T-HM813840 / HM813810.....5.16
4T-HM813841 / HM813810.....4.87

4T-M822000 SERIES
4T-JM822049 / JM822010.....5.56

4T-HM903200 SERIES
4T-HM903249 / HM903210.....2.21
4T-HM903249A / HM903210.....2.20

NTN

SERIES METRIC ISO

Units: **INCHES**
Millimeters

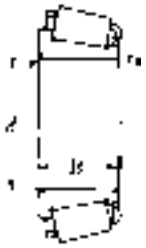

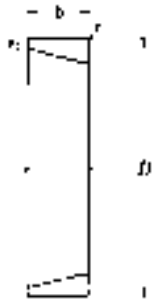

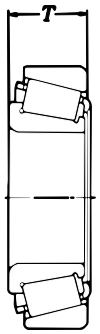

TAPERED ROLLER BEARINGS

Bearing No.	Bore	O.D.	Overall Width	Cone Width	Cup Width	Fillet Radii		Basic Load Ratings (lbs)	
	d	*D*	*T*	*B*	*b*	*r*	r_1	*Dynamic C*	*Static* C_o
4T-30208	1.5748	3.1496	.7776	.7087	.6299	.039	.039	13,800	15,100
	40	80	19.75	18	16	1.0	1.0		
4T-30209	1.7717	3.3465	.8169	.7480	.6299	.039	.039	15,200	17,600
	45	85	20.75	19	16	1.0	1.0		
4T-30210	1.9685	3.5433	.8563	.7874	.6693	.039	.039	17,400	20,900
	50	90	21.75	20	17	1.0	1.0		
4T-30211	2.1654	3.9370	.8957	.8268	.7087	.059	.039	20,900	24,900
	55	100	22.75	21	18	1.5	1.0		
4T-30212	2.3622	4.3307	.9350	.8661	.7480	.059	.039	23,500	28,000
	60	110	23.75	22	19	1.5	1.0		
4T-30213	2.5591	4.7244	.9744	.9055	.7874	.059	.039	27,700	33,000
	65	120	24.75	23	20	1.5	1.0		
4T-30214	2.7559	4.9213	1.0335	.9449	.8268	.059	.039	29,500	36,500
	70	125	26.25	24	21	1.5	1.0		
4T-30215	2.9528	5.1181	1.0728	.9843	.8661	.059	.059	31,000	39,500
	75	130	27.25	25	22	1.5	1.0		
30216U	3.1496	5.5118	1.1122	1.0236	.8661	.079	.059	36,000	45,000
	80	140	28.25	26	22	2.0	1.5		
30217U	3.3465	5.9055	1.2008	1.1024	.9449	.079	.059	41,000	52,000
	85	150	30.5	28	24	2.0	1.5		
30218U	3.5433	6.2992	1.2795	1.1811	1.0236	.079	.059	46,500	60,000
	90	160	32.5	30	26	2.0	1.5		
30219U	3.7402	6.6929	1.3583	1.2598	1.0630	.098	.079	51,000	65,000
	95	170	34.5	32	27	2.5	2.0		
30220U	3.9370	7.0866	1.4567	1.3386	1.1417	.098	.079	58,000	75,500
	100	180	37	34	29	2.5	2.0		
30221U	4.1339	7.4803	1.5354	1.4173	1.1811	.098	.079	64,500	85,000
	105	190	39	36	30	2.5	2.0		
30222U	4.3307	7.8740	1.6142	1.4961	1.2598	.098	.079	72,500	97,500
	110	200	41	38	32	2.5	2.0		
30224U	4.7244	8.4646	1.7126	1.5748	1.3386	.098	.079	78,000	106,000
	120	215	43.5	40	34	2.5	2.0		
30226U	5.1181	9.0551	1.7224	1.5748	1.3386	.118	.098	84,000	113,000
	130	230	43.75	40	34	3.0	2.5		
30228*	5.5118	9.8425	1.8012	1.6535	1.4173	.098	.098	84,000	109,000
	140	250	45.75	42	36	2.5	2.5		
30230U	5.9055	10.6299	1.9291	1.7717	1.4961	.118	.098	101,000	136,000
	150	270	49	45	38	3.0	2.5		
30232U	6.2992	11.4173	2.0472	1.8898	1.5748	.118	.098	118,000	162,000
	160	290	52	48	40	3.0	2.5		
30234U	6.6929	12.2047	2.2441	2.0472	1.6929	.157	.118	137,700	190,000
	170	310	57	52	43	4.0	3.0		
30236*	7.0866	12.5984	2.2441	2.0472	1.6929	.118	.118	126,000	162,000
	180	320	57	52	43	3.0	3.0		
30238U	7.4803	13.3858	2.3622	2.1654	1.8110	.157	.118	161,000	226,000
	190	340	60	55	46	4.0	3.0		
30240*	7.8740	14.1732	2.5197	2.2835	1.8898	.118	.118	152,000	223,000
	200	360	64	58	48	3.0	3.0		
4T-30306	1.1811	2.8346	.8169	.7480	.6299	.039	.039	13,500	13,700
	30	72	20.75	19	16	1.0	1.0		
4T-30307	1.3780	3.1496	.8957	.8268	.7087	.059	.039	16,800	17,400
	35	80	22.75	21	18	1.5	1.0		
4T-30307D	1.3780	3.1496	.8957	.8268	.5906	.059	.039	14,300	15,700
	35	80	22.75	21	15	1.5	1.0		
4T-30308	1.5748	3.5433	.9941	.9055	.7874	.059	.039	20,600	22,900
	40	90	25.25	23	20	1.5	1.0		
4T-30308D	1.5748	3.5433	.9941	.9055	.6693	.059	.039	17,300	19,200
	40	90	25.25	23	17	1.5	1.0		
4T-30309	1.7717	3.9370	1.0728	.9843	.8661	.059	.039	25,000	28,300
	45	100	27.25	25	22	1.5	1.0		
4T-30309D	1.7717	3.9370	1.0728	.9843	.7087	.059	.039	21,600	24,500
	45	100	27.25	25	18	1.5	1.0		
4T-30310	1.9685	4.3307	1.1516	1.0630	.9055	.079	.059	29,800	34,000
	50	110	29.25	27	23	2.0	1.5		
4T-30310D	1.9685	4.3307	1.1516	1.0630	.7480	.079	.059	25,500	29,300
	50	110	29.25	27	19	2.0	1.5		
4T-30311	2.1654	4.7244	1.2402	1.1417	.9843	.079	.059	35,000	40,500
	55	120	31.5	29	25	2.0	1.5		
4T-30311D	2.1654	4.7244	1.2402	1.1417	.8268	.079	.059	29,700	34,500
	55	120	31.5	29	21	2.0	1.5		
4T-30312D	2.3622	5.1181	1.3189	1.2205	.8661	.098	.079	34,000	39,500
	60	130	33.5	31	22	2.5	2.0		
30312U	2.3622	5.1181	1.3189	1.2205	1.0236	.098	.079	40,500	47,000
	60	130	33.5	31	26	2.5	2.0		
4T-30313D	2.5591	5.5118	1.4173	1.2992	.9055	.098	.079	39,000	46,000
	65	140	36	33	23	2.5	2.0		

* These bearings do not adopt subunit size.

TAPERED ROLLER BEARINGS

Units: **INCHES**
Millimeters

NTN
SERIES METRIC ISO

Bearing No.	Bore *d*	O.D. *D*	Overall Width *T*	Cone Width *B*	Cup Width *b*	Fillet Radii *r*	Fillet Radii r_1	Basic Load Ratings (lbs) Dynamic *C*	Basic Load Ratings (lbs) Static C_o
30313U	2.5591	5.5118	1.4173	1.2992	1.1024	.098	.079	45,500	53,500
	65	140	36	33	28	2.5	2.0		
4T-30314D	2.7559	5.9055	1.4961	1.3780	.9843	.098	.079	43,500	51,500
	70	150	38	35	25	2.5	2.0		
30314U	2.7559	5.9055	1.4961	1.3780	1.1811	.098	.079	51,500	61,000
	70	150	38	35	30	2.5	2.0		
30315DU	2.9528	6.2992	1.5748	1.4567	1.0236	.098	.079	48,500	57,500
	75	160	40	37	26	2.5	2.0		
30315U	2.9528	6.2992	1.5748	1.4567	1.2205	.098	.079	57,500	68,000
	75	160	40	37	31	2.5	2.0		
30316DU	3.1496	6.6929	1.6732	1.5354	1.0630	.098	.079	53,000	63,500
	80	170	42.5	39	27	2.5	2.0		
30316U	3.1496	6.6929	1.6732	1.5354	1.2992	.098	.079	65,500	79,000
	80	170	42.5	39	33	2.5	2.0		
30317DU	3.3465	7.0866	1.7520	1.6142	1.1024	.118	.098	55,500	66,000
	85	180	44.5	41	28	3.0	2.5		
30317U	3.3465	7.0866	1.7520	1.6142	1.3386	.118	.098	68,500	81,500
	85	180	44.5	41	34	3.0	2.5		
30318DU	3.5433	7.4803	1.8307	1.6929	1.1811	.118	.098	61,000	72,500
	90	190	46.5	43	30	3.0	2.5		
30318U	3.5433	7.4803	1.8307	1.6929	1.4173	.118	.098	76,000	91,500
	90	190	46.5	43	36	3.0	2.5		
30319*	3.7402	7.8740	1.9488	1.7717	1.4961	.098	.098	71,000	82,500
	95	200	49.5	45	38	2.5	2.5		
30319DU	3.7402	7.8740	1.9488	1.7717	1.2598	.118	.098	66,500	80,000
	95	200	49.5	45	32	3.0	2.5		
30320*	3.9370	8.4646	2.0276	1.8504	1.5354	.098	.098	75,000	86,000
	100	215	51.5	47	39	2.5	2.5		
30321*	4.1339	8.8583	2.1063	1.9291	1.6142	.098	.098	82,000	94,500
	105	225	53.5	49	41	2.5	2.5		
30322*	4.3307	9.4488	2.1457	1.9685	1.6535	.098	.098	89,500	104,000
	110	240	54.5	50	42	2.5	2.5		
30324*	4.7244	10.2362	2.3425	2.1654	1.8110	.098	.098	105,000	123,000
	120	260	59.5	55	46	2.5	2.5		
30326*	5.1181	11.0236	2.5098	2.2835	1.9291	.118	.118	118,000	140,000
	130	280	63.75	58	49	3.0	3.0		
30328*	5.5118	11.8110	2.6673	2.4409	2.0866	.118	.118	144,000	176,000
	140	300	67.75	62	53	3.0	3.0		
30330*	5.9055	12.5984	2.8346	2.5591	2.1654	.118	.118	153,000	197,000
	150	320	72	65	55	3.0	3.0		
30332*	6.2992	13.3858	2.9528	2.6772	2.2835	.118	.118	170,000	219,000
	160	340	75	68	58	3.0	3.0		
30334*	6.6929	14.1732	3.1496	2.8346	2.4409	.118	.118	190,000	248,000
	170	360	80	72	62	3.0	3.0		
31320XU	3.9370	8.4646	2.2244	2.0079	1.3780	.118	.098	79,500	97,500
	100	215	56.5	51	35	3.0	2.5		
31321XU	4.1339	8.8583	2.2835	2.0866	1.4173	.118	.098	85,500	105,000
	105	225	58	53	36	3.0	2.5		
31322XU	4.3307	9.4488	2.4803	2.2441	1.4961	.118	.098	97,000	120,000
	110	240	63	57	38	3.0	2.5		
31324XU	4.7244	10.2362	2.6772	2.4409	1.6535	.118	.098	116,000	147,000
	120	260	68	62	42	3.0	2.5		
31326XU	5.1181	11.0236	2.8346	2.5984	1.7323	.157	.118	135,000	176,000
	130	280	72	66	44	4.0	3.0		
31328XU	5.5118	11.8110	3.0315	2.7559	1.8504	.157	.118	154,000	204,000
	140	300	77	70	47	4.0	3.0		
31330XU	5.9055	12.5984	3.2283	2.9528	1.9685	.157	.118	175,000	232,000
	150	320	82	75	50	4.0	3.0		
32016XU	3.1496	4.9213	1.1417	1.1417	.8661	.039	.039	31,500	48,500
	80	125	29	29	22	1.0	1.0		
32017XU	3.3465	5.1181	1.1417	1.1417	.8661	.039	.039	32,000	50,500
	85	130	29	29	22	1.0	1.0		
32018XU	3.5433	5.5118	1.2598	1.2598	.9449	.059	.039	38,000	61,000
	90	140	32	32	24	1.5	1.0		
32019XU	3.7402	5.7087	1.2598	1.2598	.9449	.059	.039	38,500	63,000
	95	145	32	32	24	1.5	1.0		
32020XU	3.9370	5.9055	1.2598	1.2598	.9449	.059	.039	38,000	63,000
	100	150	32	32	24	1.5	1.0		
32021XU	4.1339	6.2992	1.3780	1.3780	1.0236	.079	.059	45,000	75,000
	105	160	35	35	26	2.0	1.5		
32022XU	4.3307	6.6929	1.4961	1.4961	1.1417	.079	.059	53,000	87,500
	110	170	38	38	29	2.0	1.5		
32024XU	4.7244	7.0866	1.4961	1.4961	1.1417	.079	.059	55,000	94,500
	120	180	38	38	29	2.0	1.5		
32026XU	5.1181	7.8740	1.7717	1.7717	1.3386	.079	.059	71,500	122,000
	130	200	45	45	34	2.0	1.5		

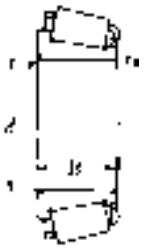

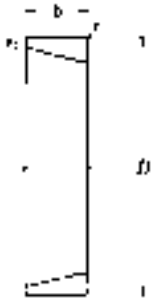

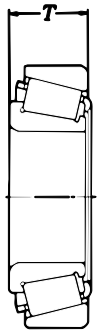

* These bearings do not adopt subunit size.

NTN

SERIES METRIC ISO

Units: **INCHES**
Millimeters

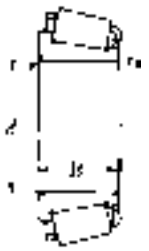

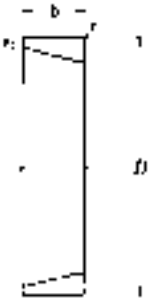

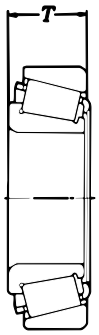

TAPERED ROLLER BEARINGS

Bearing No.	Bore *d*	O.D. *D*	Overall Width *T*	Cone Width *B*	Cup Width *b*	Fillet Radii *r*	Fillet Radii r_1	Basic Load Ratings (lbs) Dynamic *C*	Basic Load Ratings (lbs) Static C_o
32028XU	5.5118	8.2677	1.7717	1.7717	1.3386	.079	.059	74,500	131,000
	140	210	45	45	34	2.0	1.5		
32030XU	5.9055	8.8583	1.8898	1.8898	1.4173	.098	.079	83,000	147,000
	150	225	48	48	36	2.5	2.0		
32032XU	6.2992	9.4488	2.0079	2.0079	1.4961	.098	.079	98,000	178,000
	160	240	51	51	38	2.5	2.0		
32034XU	6.6929	10.2362	2.2441	2.2441	1.6929	.098	.079	112,000	201,000
	170	260	57	57	43	2.5	2.0		
32036XU	7.0866	11.0236	2.5197	2.5197	1.8898	.098	.079	145,000	262,000
	180	280	64	64	48	2.5	2.0		
32038XU	7.4803	11.4173	2.5197	2.5197	1.8898	.098	.079	148,000	272,000
	190	290	64	64	48	2.5	2.0		
32040XU	7.8740	12.2047	2.7559	2.7559	2.0866	.098	.079	180,000	330,000
	200	310	70	70	53	2.5	2.0		
32044XU	8.6614	13.3858	2.9921	2.9921	2.2441	.118	.098	207,000	380,000
	220	340	76	76	57	3.0	2.5		
32048XU	9.4488	14.1732	2.9921	2.9921	2.2441	.118	.098	209,000	395,000
	240	360	76	76	57	3.0	2.5		
32052XU	10.2362	15.7480	3.4252	3.4252	2.5591	.157	.118	271,000	510,000
	260	400	87	87	65	4.0	3.0		
32056XU	11.0236	16.5354	3.4252	3.4252	2.5591	.157	.118	275,000	530,000
	280	420	87	87	65	4.0	3.0		
32060XU	11.8110	18.1102	3.9370	3.9370	2.9134	.157	.118	335,000	635,000
	300	460	100	100	74	4.0	3.0		
32064XU	12.5984	18.8976	3.9370	3.9370	2.9134	.157	.118	340,000	660,000
	320	480	100	100	74	4.0	3.0		
4T-32203R*	.6693	1.5748	.6791	.6299	.5512	.024	.024	5,900	6,350
	17	40	17.25	16	14	.6	.6		
4T-32205R*	.9843	2.0472	.7579	.7087	.5906	.024	.024	8,550	9,650
	25	52	19.25	18	15	.6	.6		
4T-32208	1.5748	3.1496	.9744	.9055	.7480	.039	.039	17,800	21,000
	40	80	24.75	23	19	1.0	1.0		
4T-32209	1.7717	3.3465	.9744	.9055	.7480	.039	.039	18,400	22,500
	45	85	24.75	23	19	1.0	1.0		
4T-32210	1.9685	3.5433	.9744	.9055	.7480	.039	.039	19,700	24,500
	50	90	24.75	23	19	1.0	1.0		
4T-32211	2.1654	3.9370	1.0531	.9843	.8268	.059	.039	24,300	30,000
	55	100	26.75	25	21	1.5	1.0		
32212U	2.3622	4.3307	1.1713	1.1024	.9449	.059	.039	29,200	37,000
	60	110	29.75	28	24	1.5	1.0		
32213U	2.5591	4.7244	1.2894	1.2205	1.0630	.059	.039	35,500	46,000
	65	120	32.75	31	27	1.5	1.0		
32214U	2.7559	4.9213	1.3091	1.2205	1.0630	.059	.039	37,500	49,500
	70	125	33.25	31	27	1.5	1.0		
32215U	2.9528	5.1181	1.3091	1.2205	1.0630	.059	.039	37,500	50,500
	75	130	33.25	31	27	1.5	1.0		
32216U	3.1496	5.5118	1.3878	1.2992	1.1024	.079	.059	44,500	59,500
	80	140	35.25	33	28	2.0	1.5		
32217U	3.3465	9.9055	1.5157	1.4173	1.1811	.079	.059	50,500	67,500
	85	150	38.5	36	30	2.0	1.5		
32218U	3.5433	6.2992	1.6732	1.5748	1.3386	.079	.059	59,000	81,000
	90	160	42.5	40	34	2.0	1.5		
32219U	3.7402	6.6929	1.7913	1.6929	1.4567	.098	.079	67,500	93,500
	95	170	45.5	43	37	2.5	2.0		
32220U	3.9370	7.0866	1.9291	1.8110	1.5354	.098	.079	74,500	104,000
	100	180	49	46	39	2.5	2.0		
32221U	4.1339	7.4803	2.0866	1.9685	1.6929	.098	.079	85,000	122,000
	105	190	53	50	43	2.5	2.0		
32222U	4.3307	7.8740	2.2047	2.0866	1.8110	.098	.079	94,500	136,000
	110	200	56	53	46	2.5	2.0		
32224U	4.7244	8.4646	2.4213	2.2835	1.9685	.098	.079	104,000	153,000
	120	215	61.5	58	50	2.5	2.0		
32226U	5.1181	9.0551	2.6673	2.5197	2.1260	.118	.098	119,000	183,000
	130	230	67.75	64	54	3.0	2.5		
32228U	5.5118	9.8425	2.8248	2.6772	2.2835	.118	.098	137,000	207,000
	140	250	71.75	68	58	3.0	2.5		
32230U	5.9055	10.6299	3.0315	2.8740	2.3622	.118	.098	157,000	240,000
	150	270	77	73	60	3.0	2.5		
32232U	6.2992	11.4173	3.3071	3.1496	2.6378	.118	.098	200,000	320,000
	160	290	84	80	67	3.0	2.5		
32234U	6.6929	12.2047	3.5827	3.3858	2.7953	.157	.118	224,000	360,000
	170	310	91	86	71	4.0	3.0		
32236U	7.0866	12.5984	3.5827	3.3858	2.7953	.157	.118	231,000	380,000
	180	320	91	86	71	4.0	3.0		
32238*	7.4803	13.3858	3.8189	3.6220	2.9528	.118	.118	225,000	375,000
	190	340	97	92	75	3.0	3.0		

* These bearings do not adopt subunit size.

www.precise-rotation.ru

TAPERED ROLLER BEARINGS

Units: **INCHES**
Millimeters

NTN
SERIES METRIC ISO

Bearing No.	Bore *d*	O.D. *D*	Overall Width *T*	Cone Width *B*	Cup Width *b*	Fillet Radii *r*	Fillet Radii r_1	Basic Load Ratings (lbs) Dynamic *C*	Basic Load Ratings (lbs) Static C_o
32240*	7.8740	14.1732	4.0945	3.8583	3.2283	.118	.118	259,000	440,000
	200	360	104	98	82	3.0	3.0		
4T-32306	1.1811	2.8346	1.1319	1.0630	.9055	.039	.039	18,200	20,200
	30	72	28.75	27	23	1.0	1.0		
4T-32307	1.3780	3.1496	1.2894	1.2205	.9843	.059	.039	22,800	25,800
	35	80	32.75	31	25	1.5	1.0		
4T-32308	1.5748	3.5433	1.3878	1.2992	1.0630	.059	.039	27,500	33,500
	40	90	35.25	33	27	1.5	1.0		
4T-32308C	1.5748	3.5433	1.3878	1.2992	1.0630	.059	.039	24,800	31,500
	40	90	35.25	33	27	1.5	1.0		
4T-32309	1.7717	3.9370	1.5059	1.4173	1.1811	.059	.039	34,500	43,000
	45	100	38.25	36	30	1.5	1.0		
4T-32310	1.9685	4.3307	1.6634	1.5748	1.2992	.079	.059	41,500	52,000
	50	110	42.25	40	33	2.0	1.5		
4T-32311	2.1654	4.7244	1.7913	1.6929	1.3780	.079	.059	48,500	62,000
	55	120	45.5	43	35	2.0	1.5		
32312U	2.3622	5.1181	1.9094	1.8810	1.4567	.098	.079	55,000	70,500
	60	130	48.5	46	37	2.5	2.0		
32313U	2.5591	5.5118	2.0079	1.8898	1.5354	.098	.079	61,500	79,000
	65	140	51	48	39	2.5	2.0		
32314U	2.7559	5.9055	2.1260	2.0079	1.6535	.098	.079	69,500	90,500
	70	150	54	51	42	2.5	2.0		
32315U	2.9528	6.2992	2.2835	2.1654	1.7717	.098	.079	80,000	105,000
	75	160	58	55	45	2.5	2.0		
32316U	3.1496	6.6929	2.4213	2.2835	1.8898	.098	.079	89,000	118,000
	80	170	61.5	58	48	2.5	2.0		
32317U	3.3465	7.0866	2.5000	2.3622	1.9291	.118	.098	90,500	118,000
	85	180	63.5	60	49	3	2.5		
32318U	3.5433	7.4803	2.6575	2.5197	2.0866	.118	.098	101,000	133,000
	90	190	67.5	64	53	3	2.5		
32319U	3.7402	7.8740	2.8150	2.6378	2.1654	.118	.098	113,000	151,000
	95	200	71.5	67	55	3	2.5		
32320U	3.9370	8.4646	3.0512	2.8740	2.3622	.118	.098	128,000	173,000
	100	215	77.5	73	60	3	2.5		
32321U	4.1339	8.8583	3.2087	3.0315	2.4803	.118	.098	138,000	186,000
	105	225	81.5	77	63	3	2.5		
32322*	4.3307	9.4488	3.3268	3.1496	2.5591	.098	.098	140,000	186,000
	110	240	84.5	80	65	2.5	2.5		
32324U	4.7244	10.2362	3.5630	3.3858	2.7165	.118	.098	183,000	255,000
	120	260	90.5	86	69	3	2.5		
32910XU	1.9685	2.8346	.5906	.5906	.4724	.024	.024	8,000	12,800
	50	72	15	15	12	.6	.6		
32911XU	2.1654	3.1496	.6693	.6693	.5512	.024	.024	10,000	16,500
	55	80	17	17	14	.6	.6		
32912XU	2.3622	3.3465	.6693	.6693	.5512	.024	.024	10,300	17,600
	60	85	17	17	14	.6	.6		
32913XU	2.5591	3.5433	.6693	.6693	.5512	.024	.024	10,900	19,200
	65	90	17	17	14	.6	.6		
32914XU	2.7559	3.9370	.7874	.7874	.6299	.024	.024	15,400	24,700
	70	100	20	20	16	.6	.6		
32915XU	2.9528	4.1339	.7874	.7874	.6299	.024	.024	15,600	25,600
	75	105	20	20	16	.6	.6		
32916XU	3.1496	4.3307	.7874	.7874	.6299	.024	.024	16,200	27,300
	80	110	20	20	16	.6	.6		
32917XU	3.3465	4.7244	.9055	.9055	.7087	.039	.039	21,100	35,500
	85	120	23	23	18	1.0	1.0		
32918XU	3.5433	4.9213	.9055	.9055	.7087	.039	.039	21,900	37,500
	90	125	23	23	18	1.0	1.0		
32919XU	3.7402	5.1181	.9055	.9055	.7087	.039	.039	22,600	40,000
	95	130	23	23	18	1.0	1.0		
32920XU	3.9370	5.5118	.9843	.9843	.7874	.039	.039	27,200	46,500
	100	140	25	25	20	1.0	1.0		
32921XU	4.1339	5.7087	.9843	.9843	.7874	.039	.039	28,200	49,500
	105	145	25	25	20	1.0	1.0		
32922XU	4.3307	5.9055	.9843	.9843	.7874	.039	.039	28,600	51,000
	110	150	25	25	20	1.0	1.0		
32924XU	4.7244	6.4961	1.1417	1.1417	.9055	.039	.039	36,500	66,000
	120	165	29	29	23	1.0	1.0		
32926XU	5.1181	7.0866	1.2598	1.2598	.9843	.059	.039	43,500	79,000
	130	180	32	32	25	1.5	1.0		
32928XU	5.5118	7.4803	1.2598	2.2598	.9843	.059	.039	45,000	84,000
	140	190	32	32	25	1.5	1.0		
32930XU	5.9055	8.2677	1.4961	1.4961	1.1811	.079	.059	60,000	110,000
	150	210	38	38	30	2.0	1.5		
32932XU	6.2992	8.6614	1.4961	1.4961	1.1811	.079	.059	62,000	117,000
	160	220	38	38	30	2.0	1.5		

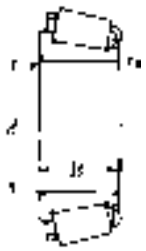

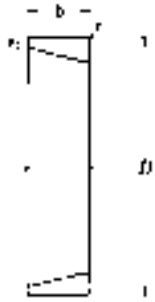

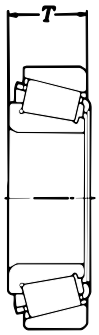

* These bearings do not adopt subunit size.

NTN

SERIES METRIC ISO

Units: **INCHES**
Millimeters

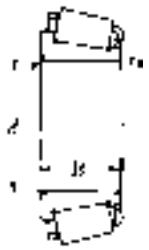

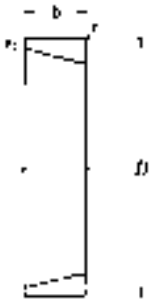

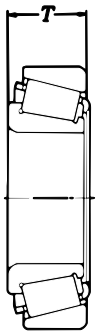

TAPERED ROLLER BEARINGS

Bearing No.	Bore *d*	O.D. *D*	Overall Width *T*	Cone Width *B*	Cup Width *b*	Fillet Radii *r*	Fillet Radii r_1	Basic Load Ratings (lbs) *Dynamic C*	Basic Load Ratings (lbs) *Static* C_o
32934XU	6.6929	9.0551	1.4961	1.4961	1.1811	.079	.059	64,500	125,000
	170	230	38	38	30	2.0	1.5		
32936XU	7.0866	9.8425	1.7717	1.7717	1.3386	.079	.059	79,000	158,000
	180	250	45	45	34	2.0	1.5		
32938XU	7.4803	10.2362	1.7717	1.7717	1.3386	.079	.059	79,500	159,000
	190	260	45	45	34	2.0	1.5		
32940XU	7.8740	11.0236	2.0079	2.0079	1.5354	.098	.079	108,000	201,000
	200	280	51	51	39	2.5	2.0		
32944XU	8.6614	11.8110	2.0079	2.0079	1.5354	.098	.079	108,000	213,000
	220	300	51	51	39	2.5	2.0		
32948XU	9.4488	12.5984	2.0079	2.0079	1.5354	.098	.079	110,000	226,000
	240	320	51	51	39	2.5	2.0		
32952XU	10.2362	14.1732	2.5000	2.5000	1.8898	.098	.079	159,000	320,000
	260	360	63.5	63.5	48	2.5	2.0		
32956XU	11.0236	14.9606	2.5000	2.5000	1.8898	.098	.079	163,000	340,000
	280	380	63.5	63.5	48	2.5	2.0		
32960XU	11.8110	16.5354	2.9921	2.9921	2.2441	.118	.098	226,000	470,000
	300	420	76	76	57	3.0	2.5		
32964XU	12.5984	17.3228	2.9921	2.9921	2.2441	.118	.098	228,000	485,000
	320	440	76	76	57	3.0	2.5		
32968XU	13.3858	18.1102	2.9921	2.9921	2.2441	.118	.098	235,000	510,000
	340	460	76	76	57	3.0	2.5		
32972XU	14.1732	18.8976	2.9921	2.9921	2.2441	.118	.098	236,000	525,000
	360	480	76	76	57	3.0	2.5		
33016U	3.1496	4.9213	1.4173	1.4173	1.1614	.039	.039	39,000	64,000
	80	125	36	36	29.5	1.0	1.0		
33017U	3.3465	5.1181	1.4173	1.4173	1.1614	.039	.039	39,500	66,500
	85	130	36	36	29.5	1.0	1.0		
33018U	3.5433	5.5118	1.5354	1.5354	1.2795	.059	.039	48,000	80,500
	90	140	39	39	32.5	1.5	1.0		
33019U	3.7402	5.7087	1.5354	1.5354	1.2795	.059	.039	49,500	84,000
	95	145	39	39	32.5	1.5	1.0		
33020U	3.9370	5.9055	1.5354	1.5354	1.2795	.059	.039	50,500	87,500
	100	150	39	39	32.5	1.5	1.0		
33021U	4.1339	6.2992	1.6929	1.6929	1.3386	.079	.059	55,000	94,500
	105	160	43	43	34	2.0	1.5		
33022U	4.3307	6.6929	1.8504	1.8504	1.4567	.079	.059	65,000	113,000
	110	170	47	47	37	2.0	1.5		
4T-33113	2.5591	4.3307	1.3386	1.3386	1.0433	.039	.039	32,500	47,500
	65	110	34	34	26.5	1.0	1.0		
4T-33208	1.5748	3.1496	1.2598	1.2598	.9843	.039	.039	23,300	29,600
	40	80	32	32	25	1.0	1.0		
4T-33209	1.7717	3.3465	1.2598	1.2598	.9843	.039	.039	24,100	31,500
	45	85	32	32	25	1.0	1.0		
4T-33210	1.9685	3.5433	1.2598	1.2598	.9646	.039	.039	25,800	35,500
	50	90	32	32	24.5	1.0	1.0		
4T-33211	2.1654	3.9370	1.3780	1.3780	1.0630	.059	.039	31,000	42,000
	55	100	35	35	27	1.5	1.0		
33212U	2.3622	4.3307	1.4961	1.4961	1.1417	.059	.039	37,500	52,500
	60	110	38	38	29	1.5	1.0		
33213U	2.5591	4.7244	1.6142	1.6142	1.2598	.059	.039	44,000	59,500
	65	120	41	41	32	1.5	1.0		
33214U	2.7559	4.9213	1.6142	1.6142	1.2598	.059	.039	45,500	63,500
	70	125	41	41	32	1.5	1.0		
33215U	2.9528	5.1181	1.6142	1.6142	1.2205	.059	.039	46,500	67,000
	75	130	41	41	31	1.5	1.0		
33216U	3.1496	5.5118	1.8110	1.8110	1.3780	.079	.059	56,500	82,500
	80	140	46	46	35	2.0	1.5		
33217U	3.3465	5.9055	1.9291	1.9291	1.4567	.079	.059	64,000	94,500
	85	150	49	49	37	2.0	1.5		

* These bearings do not adopt subunit size.

NTN BEARING WEIGHTS

4T-30208..... .959

Bearing Number

Weight (lbs)

METRIC ISO SERIES TAPERED ROLLER BEARINGS LBS.

4T-30208	.959
4T-30209	1.09
4T-30210	1.24
4T-30211	1.63
4T-30212	2.09
4T-30213	2.60
4T-30214	2.78
4T-30215	3.11
30216U	3.79
30217U	4.72
30218U	5.86
30219U	6.77
30220U	8.33
30221U	9.68
30222U	11.4
30224U	13.7
30226U	16.0
30228	18.1
30230U	24.7
30232U	28.4
30234U	37.5
30236	37.9
30238U	45.9
30240	54.7
4T-30306	.899
4T-30307	1.19
4T-30307D	1.17
4T-30308	1.70
4T-30308D	1.63
4T-30309	2.23
4T-30309D	2.11
4T-30310	2.89
4T-30310D	2.76
4T-30311	3.66
4T-30311D	3.51
4T-30312D	4.34
30312U	4.54
4T-30313D	5.34
30313U	5.62
4T-30314D	6.44
30314U	6.75
30315DU	7.65
30315U	7.87
30316DU	9.06
30316U	9.72
30317DU	10.7
30317U	11.5
30318DU	12.5
30318U	13.3
30319	14.5
30319DU	14.3
30320	17.0
30321	19.7
30322	23.1
30324	29.1
30326	36.8
30328	45.0
30330	54.5
30332	64.4
30334	76.7
31320XU	19.1
31321XU	21.3
31322XU	39.7
31324XU	34.0
31326XU	41.9
31328XU	50.7
31330XU	61.1
32016XU	2.82
32017XU	2.98
32018XU	3.95
32019XU	4.03
32020XU	4.21
32021XU	5.34
32022XU	6.77
32024XU	7.17
32026XU	10.9
32028XU	11.6
32030XU	14.0
32032XU	17.2
32034XU	23.1
32036XU	32.0
32038XU	33.3
32040XU	42.5
32044XU	55.1
32048XU	59.1
32052XU	86.9
32056XU	92.2
32060XU	131
32064XU	138
4T-32203R	.229
4T-32205R	.399
4T-32208	1.23
4T-32209	1.34
4T-32210	1.43
4T-32211	1.93
32212U	2.60
32213U	3.48
32214U	3.70
32215U	3.84
32216U	4.81
32217U	6.06
32218U	7.69
32219U	9.48
32220U	11.3
32221U	13.8
32222U	16.4
32224U	20.0
32226U	24.7
32228U	31.1
32230U	40.1
32232U	51.8
32234U	63.3
32236U	67.7
32238	73.4
32240	96.1
4T-32306	1.29
4T-32307	1.74
4T-32308	2.38
4T-32308C	2.43
4T-32309	3.22
4T-32310	4.23
4T-32311	5.38
32312U	6.66
32313U	8.07
32314U	9.83
32315U	11.8
32316U	14.1
32317U	15.8
32318U	18.9
32319U	22.3
32320U	28.0
32321U	32.0
32322	37.3
32324U	49.4
32910XU	.421
32911XU	.604
32912XU	.648
32913XU	.694
32914XU	1.07
32915XU	1.13
32916XU	1.19
32917XU	1.70
32918XU	1.80
32919XU	1.88
32920XU	2.51
32921XU	2.65
32922XU	2.73
32924XU	3.90
32926XU	5.20
32928XU	5.53
32930XU	8.64
32932XU	9.15
32934XU	9.70
32936XU	14.4
32938XU	14.9
32940XU	19.8
32944XU	22.5
32948XU	24.0
32952XU	41.4
32956XU	44.1
32960XU	69.2
32964XU	73.0
32968XU	76.9
32972XU	80.7
33016U	3.53
33017U	3.75
33018U	4.81
33019U	5.00
33020U	5.22
33021U	6.61
33022U	8.38
4T-33113	2.82
4T-33208	1.60
4T-33209	1.73
4T-33210	1.88
4T-33211	2.54
33212U	3.42
33213U	4.37
33214U	4.63
33215U	4.85
33216U	6.44
33217U	7.89

TAPERED ROLLER BEARING CARTRIDGE

Units: **INCHES**
Millimeters

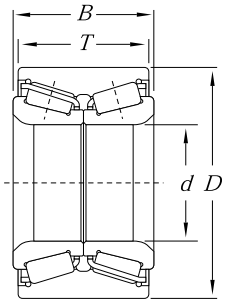

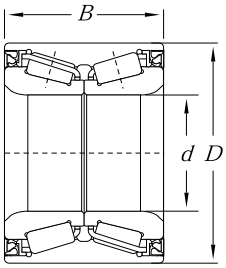

TAPERED ROLLER BEARINGS FOR WHEEL APPLICATIONS

Bearing Number	Bore *d*	O.D. *D*	Width Dimensions *B*	Width Dimensions *T*	Seal	Basic Load Ratings (lbs) *Dynamic* *C*	Basic Load Ratings (lbs) *Static* C_0	Weight (lbs)
4T-CRI-0574	.98 25	2.05 52	1.46 37	1.46 37	X	60,500	76,500	.79
4T-CRI-0569	1.06 27	2.05 52	1.73 44	1.69 43		55,000	77,000	.88
4T-CRI-0685	1.26 32	2.28 58	2.56 65	2.24 57		63,500	93,000	1.63
4T-CRI-0797	1.34 34	2.67 67.8	1.69 43	1.57 40		88,000	131,000	1.63
4T-CRI-0760	1.38 35	2.52 64	1.46 37	1.46 37	X	58,500	82,000	1.08
4T-CRI-0778	1.38 35	2.44 62	2.05 52	1.89 48	X	75,000	113,000	1.37
4T-CRI-0820	1.50 38	2.52 64	1.26 32	1.14 29		60,000	90,500	.86
4T-CRI-08A05	1.50 38	2.56 65	2.05 52	1.89 48		60,000	89,500	1.43
4T-CRI-0849	1.50 38	2.99 76	1.69 43	1.57 40		91,000	139,000	1.39
4T-CRI-0868	1.54 39	2.68 68	1.46 37	1.46 37	X	62,000	91,500	1.19
4T-CRI-0826	1.57 40	3.15 80	1.50 38	1.50 38		95,000	137,000	1.94
4T-CRI-0822	1.65 42	2.83 72	1.50 38	1.50 38	X	75,000	105,000	1.30
4T-CRI-0823	1.65 42	2.83 72	1.50 38	1.38 35		82,500	127,000	1.32
4T-CRI-0881	1.65 42	2.83 72	1.50 38	1.38 35		82,500	127,000	1.32
4T-CRI-08A01	1.65 42	2.83 72	1.50 38	1.38 35		75,000	105,000	1.28
4T-CRI-08A02	1.65 42	2.83 72	2.05 52	1.89 48		57,000	80,000	1.70
4T-CRI-0993	1.69 43	2.87 73	1.77 45	1.61 41		75,000	105,000	1.52
4T-CRI-0966	1.77 45	3.54 90	2.13 54	2.01 51		154,000	223,000	3.42
4T-CRI-0992	1.81 46	3.03 77	1.77 45	1.61 41		79,500	124,000	1.76
4T-CRI-0988	1.81 46	3.07 78	1.93 49	1.93 49	X	94,000	148,000	2.07
4T-CRI-0994	1.81 46	3.15 80	1.69 43	1.57 40		94,000	148,000	2.01
4T-CRI-1069	1.97 50	3.31 84	2.13 54	2.13 54	X	107,000	173,000	2.38

COMPONENT PARTS FOR TAPERED ROLLER BEARING SETS

Set Numbers	Cone/Cup
4T-SET 1	4T-LM11749/LM11710
4T-SET 2	4T-LM11949/LM11910
4T-SET 2L	4T-LM11949XJXL/LM11910XL
4T-SET 3	4T-M12649/M12610
4T-SET 4	4T-L44649/L44610
4T-SET 5	4T-LM48548/LM48510
4T-SET 5L	4T-LM48548XJXL/LM48510XL
4T-SET 6	4T-LM67048/LM67010
4T-SET 6L	4T-LM67048XJXL/LM67010XL
4T-SET 7	4T-M201047S/M201011+A *
4T-SET 12	4T-LM12749/LM12710
4T-SET 13	4T-L68149/L68110
4T-SET 14	4T-L44643/L44610
4T-SET 15	4T-L45449/L45410
4T-SET 16	4T-LM12749/LM12711
4T-SET 17	4T-L68149/L68111
4T-SET 18	4T-JL69349/JL69310
4T-SET 19	4T-07100/07196
4T-SET 21	4T-1988/1922
4T-SET 22	4T-JLM506848E/JLM506810DB
4T-SET 23	4T-LM104949E/LM104911DB
4T-SET 24	4T-CR-0659
4T-SET 28	4T-CR-0679PX1
4T-SET 29	4T-LM67045/LM67010
4T-SET 30	4T-CR-0580PX1
4T-SET 31	4T-JL68145/JL68111Z
4T-SET 32	4T-320/28XX1
4T-SET 33	4T-320/32XX1
4T-SET 34	4T-LM12748/LM12710
4T-SET 35	4T-LM501349/LM501310
4T-SET 36	4T-LM603049/LM603012
4T-SET 37	4T-LM603049/LM603011
4T-SET 38	4T-LM104949/LM104911
4T-SET 39	4T-JL26749/JL26710
4T-SET 40	4T-JLM104946/JLM104910Z
4T-SET 42	4T-JLM506849A/JLM506811
4T-SET 47	4T-LM102949/LM102910

* A - Retaining Ring (TKB1001)

SPHERICAL ROLLER BEARING NUMBERING SYSTEM

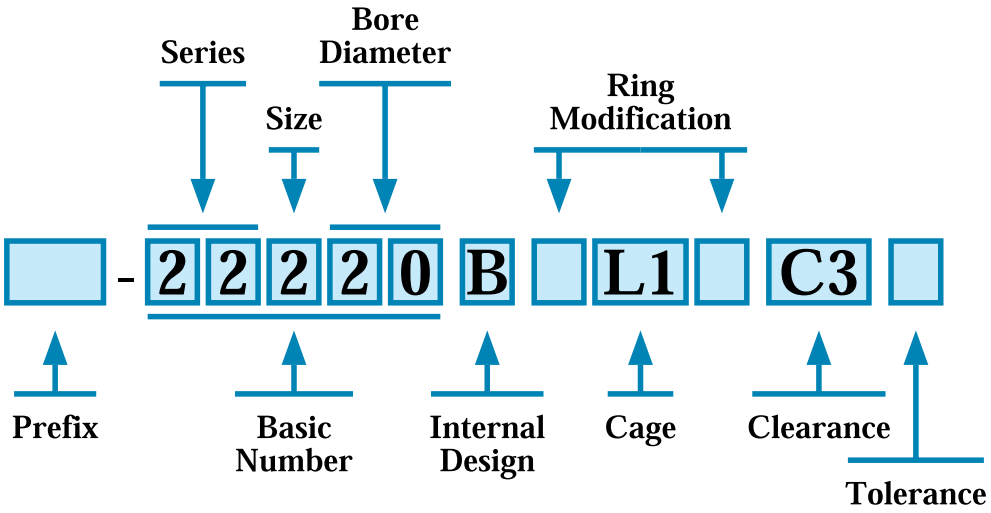

1. PREFIX

TS2:	Heat stabilization for up to 320º F (160º C)
TS3:	Heat stabilization for up to 390º F (200º C)
TS4:	Heat stabilization for up to 480º F (250º C)
LH:	STJ2 Material (Temp 250ºC)
MX:	All components phosphate coated

2. SERIES

213:	Standard series spherical roller bearings
222, 223:	Standard series spherical roller bearings
230, 231, 232, 239:	Standard series spherical roller bearings
240, 241:	Standard series spherical roller bearings
W:	Wide series spherical roller bearing with integral seals

3. INTERNAL DESIGN

B:	One piece ribbed inner ring, asymmetrical rollers and center guided retainer
C:	Plain inner ring, center floating guide ring
UA:	Inner ring without center guide, asymmetrical rollers, and outer ring center-guided retainer (limited thrust capabilities)
E:	High capacity spherical roller bearings

4. CAGE

No Symbol:	Standard cage
J:	Pressed steel cage
L1:	Machined brass cage
T2:	Nylon cage

5. SEALS

LL:	Two integral garter seals with steel backing plates

6. RING MODIFICATION

D1:	Oil groove and holes
K:	1:12 tapered bore

7. INTERNAL CLEARANCE

C1:	Radial clearance less than C2
C2:	Radial clearance less than normal
No Suffix:	Normal internal clearance
C3:	Radial clearance greater than normal
C4:	Radial clearance greater than C3
C5:	Radial clearance greater than C4
CSXX:	Special radial clearance; XX is mean value in 0.001 mm units

8. TOLERANCE

No Symbol:	Class 0 (equivalent to ABEC 1); standard
PXn:	Special tolerance, from 1 onward
Vn:	Special requirement, from 1 onward
VS1:	Special tolerance for shaker screen bearings (C3 clearance)
VS2:	Special tolerance for shaker screen bearings (C4 clearance)

www.precise-rotation.ru

SPHERICAL ROLLER BEARINGS

Units: **INCHES**
Millimeters

NTN
SERIES 213

Bearing No. 213	Bearing No. 213K	Bore *d*	O.D. *D*	Width *B*	Fillet Radius (minimum) *r*	Basic Load Ratings (lbs) *Dynamic C*	Basic Load Ratings (lbs) *Static C_o*
21308C	**21308CK**	**1.5748** 40	**3.5433** 90	**.9055** 23	**.039** 1.0	**19,800**	**20,200**
21309C	**21309CK**	**1.7717** 45	**3.9370** 100	**.9843** 25	**.039** 1.0	**23,000**	**23,800**
21310C	**21310CK**	**1.9685** 50	**4.3307** 110	**1.0630** 27	**.059** 1.5	**26,400**	**28,500**
21311	**21311K**	**2.1654** 55	**4.7244** 120	**1.1417** 29	**.098** 2.5	**32,500**	**36,500**
21312	**21312K**	**2.3622** 60	**5.1181** 130	**1.2205** 31	**.098** 2.5	**37,500**	**43,000**
21313	**21313K**	**2.5591** 65	**5.5118** 140	**1.2992** 33	**.098** 2.5	**43,500**	**51,000**
21314	**21314K**	**2.7559** 70	**5.9055** 150	**1.3780** 35	**.098** 2.5	**49,500**	**59,000**
21315	**21315K**	**2.9528** 75	**6.2992** 160	**1.4567** 37	**.098** 2.5	**53,500**	**64,500**
21316	**21316K**	**3.1496** 80	**6.6929** 170	**1.5354** 39	**.098** 2.5	**58,500**	**71,000**
21317	**21317K**	**3.3465** 85	**7.0866** 180	**1.6142** 41	**.117** 3.0	**65,000**	**80,000**
21318	**21318K**	**3.5433** 90	**7.4803** 190	**1.6929** 43	**.117** 3.0	**72,000**	**90,000**
21319	**21319K**	**3.7402** 95	**7.8740** 200	**1.7717** 45	**.117** 3.0	**75,500**	**94,500**
21320	**21320K**	**3.9370** 100	**8.4646** 215	**1.8504** 47	**.117** 3.0	**83,000**	**105,000**

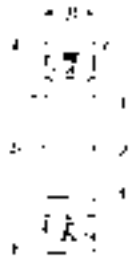

Cylindrical Bore
213

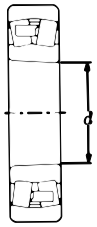

Tapered Bore
213K
Taper 1:12

Note: The d dimension for the tapered bore is measured from the side of the bearing with the smallest bore dimension.

SERIES 222

Units: INCHES
Millimeters

In this series, machined brass cages are also available. When placing an order for them, put the suffix L1 on the bearing number.

Example: 22211EL1

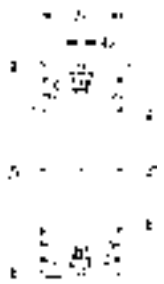

Cylindrical Bore
232

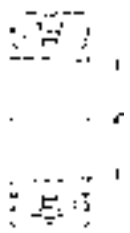

Tapered Bore
232K
Taper 1:12

SPHERICAL ROLLER BEARINGS

Bearing No. 222	Bearing No. 222K	Bore *d*	O.D. *D*	Width *B*	Fillet Radius (minimum) *r*	Oil Groove Width *G*	Basic Load Ratings (lbs) Dynamic *C*	Basic Load Ratings (lbs) Static C_o
22208CD1	**22208CKD1**	**1.5748**	**3.1496**	**.9055**	**.043**	**—**	**17,800**	**19,900**
		40	80	23	1.1	—		
22209CD1	**22209CKD1**	**1.7717**	**3.3465**	**.9055**	**.043**	**—**	**18,600**	**21,400**
		45	85	23	1.1	—		
22210CD1	**22210CKD1**	**1.9685**	**3.5433**	**.9055**	**.043**	**—**	**19,300**	**23,000**
		50	90	23	1.1	—		
22211ED1	**22211EKD1**	**2.1654**	**3.9370**	**.9843**	**.079**	**—**	**26,460**	**32,413**
		55	100	25	2.0	—		
22212ED1	**22212EKD1**	**2.3622**	**4.3307**	**1.1024**	**.079**	**—**	**33,736**	**40,792**
		60	110	28	2.0	—		
22213ED1	**22213EKD1**	**2.5591**	**4.7244**	**1.2205**	**.079**	**—**	**39,690**	**48,951**
		65	120	31	2.0	—		
22214ED1	**22214EKD1**	**2.7559**	**4.9213**	**1.2205**	**.079**	**—**	**41,233**	**52,038**
		70	125	31	2.0	—		
22215ED1	**22215EKD1**	**2.9528**	**5.1181**	**1.2205**	**.079**	**—**	**42,777**	**55,345**
		75	130	31	2.0	—		
22216ED1	**22216EKD1**	**3.1496**	**5.5118**	**1.2992**	**.098**	**—**	**47,848**	**62,181**
		80	140	33	2.5	—		
22217ED1	**22217EKD1**	**3.3465**	**5.9055**	**1.4173**	**.098**	**—**	**56,448**	**71,662**
		85	150	36	2.5	—		
22218ED1	**22218EKD1**	**3.5433**	**6.2992**	**1.5748**	**.098**	**—**	**65,709**	**87,097**
		90	160	40	2.5	—		
22219BD1	**22219BKD1**	**3.7402**	**6.6920**	**1.6929**	**.098**	**—**	**65,500**	**86,500**
		95	170	43	2.5	—		
22220BD1	**22220BKD1**	**3.9370**	**7.0865**	**1.8110**	**.098**	**.31**	**70,000**	**92,500**
		100	180	46	2.5	8		
22222BD1	**22222BKD1**	**4.3307**	**7.8740**	**2.0866**	**.098**	**.39**	**92,500**	**128,000**
		110	200	53	2.5	10		
22224BD1	**22224BKD1**	**4.7244**	**8.4646**	**2.2835**	**.098**	**.39**	**109,000**	**158,000**
		120	215	58	2.5	10		
22226BD1	**22226BKD1**	**5.1181**	**9.0551**	**2.5197**	**.118**	**.39**	**127,000**	**176,000**
		130	230	64	3.0	10		
22228BD1	**22228BKD1**	**5.5118**	**9.8425**	**2.6772**	**.118**	**.39**	**153,000**	**218,000**
		140	250	68	3.0	10		
22230BD1	**22230BKD1**	**5.9055**	**10.6299**	**2.8740**	**.118**	**.47**	**174,000**	**262,000**
		150	270	73	3.0	12		
22232BD1	**22232BKD1**	**6.2992**	**11.4173**	**3.1496**	**.118**	**.47**	**195,000**	**290,000**
		160	290	80	3.0	12		
22234BD1	**22234BKD1**	**6.6929**	**12.2047**	**3.3858**	**.157**	**.47**	**225,000**	**340,000**
		170	310	86	4.0	12		
22236B	**22236BK**	**7.0866**	**12.5984**	**3.3858**	**.157**	**.47**	**233,000**	**360,000**
		180	320	86	4.0	12		
22238B	**22238BK**	**7.4803**	**13.3858**	**3.6220**	**.157**	**.47**	**260,000**	**410,000**
		190	340	92	4.0	12		
22240B	**22240BK**	**7.8740**	**14.1732**	**3.8583**	**.157**	**.47**	**295,000**	**450,000**
		200	360	98	4.0	12		
22244B	**22244BK**	**8.6614**	**15.7480**	**4.2520**	**.157**	**.47**	**350,000**	**545,000**
		220	400	108	4.0	12		
22248B	**22248BK**	**9.4488**	**17.3228**	**4.7244**	**.157**	**.63**	**430,000**	**680,000**
		240	440	120	4.0	16		
22252B	**22252BK**	**10.2362**	**18.8976**	**5.1181**	**.197**	**.63**	**500,000**	**805,000**
		260	480	130	5.0	16		
22256B	**22256BK**	**11.0236**	**19.6850**	**5.1181**	**.197**	**.63**	**520,000**	**855,000**
		280	500	130	5.0	16		
22260B	**22260BK**	**11.8110**	**21.2598**	**5.5118**	**.197**	**.79**	**600,000**	**975,000**
		300	540	140	5.0	20		
22264B	**22264BK**	**12.5984**	**22.8346**	**5.9055**	**.197**	**.79**	**695,000**	**1,140,000**
		320	580	150	5.0	20		

The suffix D1 means the bearing has lubrication holes and an oil groove. However, for bearing numbers 22236B(K) and over, the suffix D1 is not needed as the lubrication holes and oil groove are standard.

For bearings with a blank G dimension, no lubrication holes and oil groove are provided. These features may be added upon request. (Add suffix D1.)

Note: 'E' type features higher load capacity and high temp. resin cages (40° C to 150° C); EP oil additives could effect cage material.

Note: The d dimension for the tapered bore is measured from the side of the bearing with the smallest bore dimension.

SPHERICAL ROLLER BEARINGS

Units: **INCHES**
Millimeters

SERIES 223

Bearing No. 223	Bearing No. 223K	Bore *d*	O.D. *D*	Width *B*	Fillet Radius *r*	Oil Groove Width *G*	Basic Load Ratings (lbs) *Dynamic C*	Basic Load Ratings (lbs) *Static* C_o
22308CD1	**22308CKD1**	**1.5748**	**3.5433**	**1.2992**	**.039**	**—**	**27,200**	**28,800**
		40	90	33	1.0	—		
22309CD1	**22309CKD1**	**1.7717**	**3.9370**	**1.4173**	**.059**	**—**	**33,000**	**37,500**
		45	100	36	1.5	—		
22310CD1	**22310CKD1**	**1.9685**	**4.3307**	**1.5748**	**.059**	**—**	**42,000**	**47,500**
		50	110	40	1.5	—		
22311BD1	**22311BKD1**	**2.1654**	**4.7244**	**1.6929**	**.098**	**—**	**46,000**	**52,500**
		55	120	43	2.5	—		
22312BD1	**22312BKD1**	**2.3622**	**5.1181**	**1.8110**	**.098**	**—**	**53,000**	**60,500**
		60	130	46	2.5	—		
22313BD1	**22313BKD1**	**2.5591**	**5.5118**	**1.8898**	**.098**	**—**	**59,500**	**71,000**
		65	140	48	2.5	—		
22314BD1	**22314BKD1**	**2.7559**	**5.9055**	**2.0079**	**.098**	**—**	**72,500**	**85,000**
		70	150	51	2.5	—		
22315BD1	**22315BKD1**	**2.9528**	**6.2992**	**2.1654**	**.098**	**—**	**74,000**	**92,000**
		75	160	55	2.5	—		
22316BD1	**22316BKD1**	**3.1496**	**6.6929**	**2.2835**	**.098**	**—**	**86,000**	**105,000**
		80	170	58	2.5	—		
22317BD1	**22317BKD1**	**3.3465**	**7.0866**	**2.3622**	**.118**	**.31**	**93,500**	**115,000**
		85	180	60	3.0	8		
22318BD1	**22318BKD1**	**3.5433**	**7.4803**	**2.5197**	**.118**	**.39**	**107,000**	**132,000**
		90	190	64	3.0	10		
22319BD1	**22319BKD1**	**3.7402**	**7.8740**	**2.6378**	**.118**	**.39**	**112,000**	**138,000**
		95	200	67	3.0	10		
22320BD1	**22320BKD1**	**3.9370**	**8.4646**	**2.8740**	**.118**	**.39**	**136,000**	**169,000**
		100	215	73	3.0	10		
22322BD1	**22322BKD1**	**4.3307**	**9.4488**	**3.1496**	**.118**	**.39**	**167,000**	**209,000**
		110	240	80	3.0	10		
22324BD1	**22324BKD1**	**4.7244**	**10.2362**	**3.3858**	**.118**	**.47**	**198,000**	**252,000**
		120	260	86	3.0	12		
22326BD1	**22326BKD1**	**5.1181**	**11.0236**	**3.6614**	**.157**	**.47**	**221,000**	**282,000**
		130	280	93	4.0	12		
22328BD1	**22328BKD1**	**5.5118**	**11.8110**	**4.0157**	**.157**	**.47**	**250,000**	**320,000**
		140	300	102	4.0	12		
22330B	**22330BK**	**5.9055**	**12.5984**	**4.2520**	**.157**	**.47**	**281,000**	**385,000**
		150	320	108	4.0	12		
22332B	**22332BK**	**6.2992**	**13.3858**	**4.4882**	**.157**	**.47**	**315,000**	**440,000**
		160	340	114	4.0	12		
22334B	**22334BK**	**6.6929**	**14.1732**	**4.7244**	**.157**	**.47**	**340,000**	**480,000**
		170	360	120	4.0	12		
22336B	**22336BK**	**7.0866**	**14.9606**	**4.9606**	**.157**	**.47**	**385,000**	**565,000**
		180	380	126	4.0	12		
22338B	**22338BK**	**7.4803**	**15.7480**	**5.1969**	**.197**	**.47**	**415,000**	**615,000**
		190	400	132	5.0	12		
22340B	**22340BK**	**7.8740**	**16.5354**	**5.4331**	**.197**	**.63**	**460,000**	**680,000**
		200	420	138	5.0	16		
22344B	**22344BK**	**8.6614**	**18.1102**	**5.7087**	**.197**	**.63**	**530,000**	**790,000**
		220	460	145	5.0	16		
22348B	**22348BK**	**9.4488**	**19.6850**	**6.1024**	**.197**	**.63**	**605,000**	**910,000**
		240	500	155	5.0	16		
22352B	**22352BK**	**10.2362**	**21.2598**	**6.4961**	**.197**	**.79**	**695,000**	**1,060,000**
		260	540	165	5.0	20		
22356B	**22356BK**	**11.0236**	**22.8346**	**6.8898**	**.236**	**.79**	**790,000**	**1,200,000**
		280	580	175	6.0	20		
22360B	**22360BK**	**11.8110**	**24.4094**	**7.2835**	**.295**	**.79**	**805,000**	**1,210,000**
		300	620	185	7.5	20		

In this series, machined brass cages are also available. When placing an order for them, put the suffix L1 on the bearing number.

Example: 22311BL1

Cylindrical Bore
223B
223C

Tapered Bore
223BK
223CK
Taper 1:12

Cylindrical Bore
223B

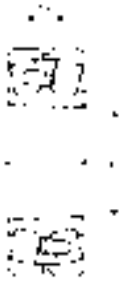

Tapered Bore
223BK
Taper 1:12

The suffix D1 means the bearing has lubrication holes and an oil groove. However, for bearing numbers 22330B(K) and over, the suffix D1 is not needed as the lubrication holes and oil groove are standard.

For bearings with a blank G dimension, no lubrication holes and oil groove are provided. These features may be added upon request. (Add suffix D1.)

Note: The d dimension for the tapered bore is measured from the side of the bearing with the smallest bore dimension.

NTN

SERIES 230

Units: **INCHES**
Millimeters

SPHERICAL ROLLER BEARINGS

Bearing No. 230	Bearing No. 230K	Bore *d*	O.D. *D*	Width *B*	Fillet Radius *r*	Oil Groove Width *G*	Basic Load Ratings (lbs) *Dynamic C*	Basic Load Ratings (lbs) *Static* C_o
23022BD1	**23022BKD1**	**4.3307**	**6.6929**	**1.7717**	**.098**	**.31**	**63,500**	**102,000**
		110	170	45	2.5	8		
23024BD1	**23024BKD1**	**4.7244**	**7.0866**	**1.8110**	**.098**	**.31**	**66,500**	**111,000**
		120	180	46	2.5	8		
23026BD1	**23026BKD1**	**5.1181**	**7.8740**	**2.0472**	**.098**	**.31**	**84,500**	**139,000**
		130	200	52	2.5	8		
23028BD1	**23028BKD1**	**5.5118**	**8.2677**	**2.0866**	**.098**	**.31**	**90,500**	**156,000**
		140	210	53	2.5	8		
23030BD1	**23030BKD1**	**5.9055**	**8.8583**	**2.2047**	**.098**	**.31**	**100,000**	**174,000**
		150	225	56	2.5	8		
23032BD1	**23032BKD1**	**6.2992**	**9.4488**	**2.3622**	**.098**	**.31**	**114,000**	**199,000**
		160	240	60	2.5	8		
23034BD1	**23034BKD1**	**6.6929**	**10.2362**	**2.6378**	**.098**	**.39**	**141,000**	**242,000**
		170	260	67	2.5	10		
23036BD1	**23036BKD1**	**7.0866**	**11.0236**	**2.9134**	**.098**	**.39**	**166,000**	**291,000**
		180	280	74	2.5	10		
23038BD1	**23038BKD1**	**7.4803**	**11.4173**	**2.9528**	**.098**	**.39**	**170,000**	**305,000**
		190	290	75	2.5	10		
23040BD1	**23040BKD1**	**7.8740**	**12.2047**	**3.2283**	**.098**	**.39**	**205,000**	**365,000**
		200	310	82	2.5	10		
23044B	**23044BK**	**8.6614**	**13.3858**	**3.5433**	**.118**	**.47**	**238,000**	**430,000**
		220	340	90	3.0	12		
23048B	**23048BK**	**9.4488**	**14.1732**	**3.6220**	**.118**	**.47**	**255,000**	**480,000**
		240	360	92	3.0	12		
23052B	**23052BK**	**10.2362**	**15.7480**	**4.0945**	**.157**	**.47**	**320,000**	**590,000**
		260	400	104	4.0	12		
23056B	**23056BK**	**11.0236**	**16.5354**	**4.1732**	**.157**	**.47**	**340,000**	**655,000**
		280	420	106	4.0	12		
23060B	**23060BK**	**11.8110**	**18.1102**	**4.6457**	**.157**	**.47**	**425,000**	**800,000**
		300	460	118	4.0	12		
23064B	**23064BK**	**12.5984**	**18.8976**	**4.7638**	**.157**	**.47**	**440,000**	**870,000**
		320	480	121	4.0	12		
23068B	**23068BK**	**13.3858**	**20.4724**	**5.2362**	**.197**	**.63**	**505,000**	**990,000**
		340	520	133	5.0	16		
23072B	**23072BK**	**14.1732**	**21.2598**	**5.2756**	**.197**	**.63**	**535,000**	**1,060,000**
		360	540	134	5.0	16		
23076B	**23076BK**	**14.9606**	**22.0472**	**5.3150**	**.197**	**.63**	**550,000**	**1,120,000**
		380	560	135	5.0	16		
23080B	**23080BK**	**15.7480**	**23.6220**	**5.8268**	**.197**	**.63**	**655,000**	**1,320,000**
		400	600	148	5.0	16		
23084B	**23084BK**	**16.5354**	**24.4094**	**5.9055**	**.197**	**.63**	**680,000**	**1,400,000**
		420	620	150	5.0	16		
23088B	**23088BK**	**17.3228**	**25.5906**	**6.1811**	**.236**	**.79**	**735,000**	**1,540,000**
		440	650	157	6.0	20		
23092B	**23092BK**	**18.1102**	**26.7717**	**6.4173**	**.236**	**.79**	**805,000**	**1,680,000**
		460	680	163	6.0	20		
23096B	**23096BK**	**18.8976**	**27.5591**	**6.4961**	**.236**	**.79**	**835,000**	**1,770,000**
		480	700	165	6.0	20		
230/500B	**230/500BK**	**19.6850**	**28.3465**	**6.5748**	**.236**	**.79**	**860,000**	**1,870,000**
		500	720	167	6.0	20		
230/530B	**230/530BK**	**20.8661**	**30.7087**	**7.2835**	**.236**	**.79**	**985,000**	**2,110,000**
		530	780	185	6.0	20		
230/560B	**230/560BK**	**22.0472**	**32.2835**	**7.6772**	**.236**	**.79**	**1,080,000**	**2,360,000**
		560	820	195	6.0	20		
230/600B	**230/600BK**	**23.6220**	**34.2520**	**7.8740**	**.236**	**.79**	**1,160,000**	**2,640,000**
		600	870	200	6.0	20		
230/630B	**230/630BK**	**24.8031**	**36.2205**	**8.3465**	**.295**	**.79**	**1,320,000**	**2,920,000**
		630	920	212	7.5	20		
230/670B	**230/670BK**	**26.3780**	**38.5827**	**9.0551**	**.295**	**.79**	**1,470,000**	**3,300,000**
		670	980	230	7.5	20		
230/710B	**230/710BK**	**27.9528**	**40.5512**	**9.2913**	**.295**	**.94**	**1,610,000**	**3,650,000**
		710	1030	236	7.5	24		
230/750B	**230/750BK**	**29.5276**	**42.9134**	**9.8425**	**.295**	**.94**	**1,840,000**	**4,100,000**
		750	1090	250	7.5	24		

In this series, machined brass cages are also available. When placing an order for them, put the suffix L1 on the bearing number.

Example: 23024BL1D1

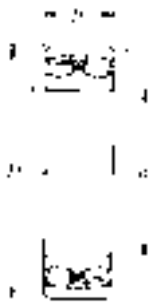

Cylindrical Bore
230

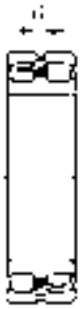

Cylindrical Bore
230

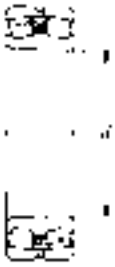

Tapered Bore
230K
Taper 1:12

The suffix D1 means the bearing has lubrication holes and an oil groove. However, for bearing numbers 23044B(K) and over, the suffix D1 is not needed as the lubrication holes and the oil groove are standard.

Note: The d dimension for the tapered bore is measured from the side of the bearing with the smallest bore dimension.

SPHERICAL ROLLER BEARINGS

Units: **INCHES**
Millimeters

SERIES 231

Bearing No. 231	Bearing No. 231K	Bore *d*	O.D. *D*	Width *B*	Fillet Radius *r*	Oil Groove Width *G*	Basic Load Ratings (lbs) *Dynamic C*	Basic Load Ratings (lbs) *Static C_o*
23122BD1	**23122BKD1**	**4.3307**	**7.0866**	**2.2047**	**.098**	**.31**	**83,000**	**131,000**
		110	180	56	2.5	8		
23124BD1	**23124BKD1**	**4.7244**	**7.8740**	**2.4409**	**.098**	**.39**	**102,000**	**158,000**
		120	200	62	2.5	10		
23126BD1	**23126BKD1**	**5.1181**	**8.2677**	**2.5197**	**.098**	**.39**	**111,000**	**179,000**
		130	210	64	2.5	10		
23128BD1	**23128BKD1**	**5.5118**	**8.8583**	**2.6772**	**.098**	**.39**	**121,000**	**201,000**
		140	225	68	2.5	10		
23130BD1	**23130BKD1**	**5.9055**	**9.8425**	**3.1496**	**.098**	**.39**	**165,000**	**268,000**
		150	250	80	2.5	10		
23132BD1	**23132BKD1**	**6.2992**	**10.6299**	**3.3858**	**.098**	**.47**	**189,000**	**310,000**
		160	270	86	2.5	12		
23134BD1	**23134BKD1**	**6.6929**	**11.0236**	**3.4646**	**.098**	**.47**	**199,000**	**335,000**
		170	280	88	2.5	12		
23136BD1	**23136BKD1**	**7.0866**	**11.8110**	**3.7795**	**.118**	**.47**	**232,000**	**390,000**
		180	300	96	3.0	12		
23138B	**23138BK**	**7.4803**	**12.5984**	**4.0945**	**.118**	**.47**	**268,000**	**455,000**
		190	320	104	3.0	12		
23140B	**23140BK**	**7.8740**	**13.3858**	**4.4094**	**.118**	**.47**	**305,000**	**510,000**
		200	340	112	3.0	12		
23144B	**23144BK**	**8.6614**	**14.5669**	**4.7244**	**.157**	**.47**	**350,000**	**610,000**
		220	370	120	4.0	12		
23148B	**23148BK**	**9.4488**	**15.7480**	**5.0394**	**.157**	**.47**	**390,000**	**690,000**
		240	400	128	4.0	12		
23152B	**23152BK**	**10.2362**	**17.3228**	**5.6693**	**.157**	**.63**	**470,000**	**845,000**
		260	440	144	4.0	16		
23156B	**23156BK**	**11.0236**	**18.1102**	**5.7480**	**.197**	**.63**	**505,000**	**930,000**
		280	460	146	5.0	16		
23160B	**23160BK**	**11.8110**	**19.6850**	**6.2992**	**.197**	**.63**	**605,000**	**1,090,000**
		300	500	160	5.0	16		
23164B	**23164BK**	**12.5984**	**21.2598**	**6.9291**	**.197**	**.79**	**700,000**	**1,300,000**
		320	540	176	5.0	20		
23168B	**23168BK**	**13.3858**	**22.8346**	**7.4803**	**.197**	**.79**	**810,000**	**1,480,000**
		340	580	190	5.0	20		
23172B	**23172BK**	**14.1732**	**23.6220**	**7.5591**	**.197**	**.79**	**845,000**	**1,580,000**
		360	600	192	5.0	20		
23176B	**23176BK**	**14.9606**	**24.4094**	**7.6378**	**.197**	**.79**	**880,000**	**1,690,000**
		380	620	194	5.0	20		
23180B	**23180BK**	**15.7480**	**25.5906**	**7.8740**	**.236**	**.94**	**940,000**	**1,810,000**
		400	650	200	6.0	24		
23184B	**23184BK**	**16.5354**	**27.5591**	**8.8189**	**.236**	**.94**	**1,150,000**	**2,200,000**
		420	700	224	6.0	24		
23188B	**23188BK**	**17.3228**	**28.3465**	**8.8976**	**.236**	**.94**	**1,170,000**	**2,260,000**
		440	720	226	6.0	24		
23192B	**23192BK**	**18.1102**	**28.9212**	**9.4488**	**.295**	**.94**	**1,290,000**	**2,560,000**
		460	760	240	7.5	24		
23196B	**23196BK**	**18.8976**	**31.1024**	**9.7638**	**.295**	**.94**	**1,410,000**	**2,810,000**
		480	790	248	7.5	24		
231/500B	**231/500BK**	**19.6850**	**32.6772**	**10.3937**	**.295**	**.94**	**1,540,000**	**3,050,000**
		500	830	264	7.5	24		
231/530B	**231/530BK**	**20.8661**	**34.2520**	**10.7087**	**.295**	**.94**	**1,570,000**	**3,200,000**
		530	870	272	7.5	24		
231/560B	**231/560BK**	**22.0472**	**36.2205**	**11.0236**	**.295**	**.94**	**1,720,000**	**3,500,000**
		560	920	280	7.5	24		
231/600B	**231/600BK**	**23.6220**	**38.5827**	**11.8110**	**.295**	**.94**	**2,030,000**	**4,150,000**
		600	980	300	7.5	24		
231/630B	**231/630BK**	**24.8031**	**40.5512**	**12.4016**	**.295**	**.94**	**2,150,000**	**4,450,000**
		630	1030	315	7.5	24		
231/670B	**231/670BK**	**26.3780**	**42.9134**	**13.2283**	**.295**	**.94**	**2,530,000**	**5,300,000**
		670	1090	336	7.5	24		
231/710B	**231/710BK**	**27.9528**	**45.2756**	**13.5827**	**.374**	**.94**	**2,620,000**	**5,600,000**
		710	1150	345	9.5	24		

In this series, machined brass cages are also available. When placing an order for them, put the suffix L1 on the bearing number.

Example: 23124BL1D1

Cylindrical Bore
231

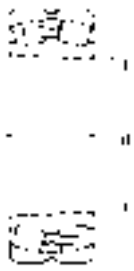

Tapered Bore
231K
Taper 1:12

The suffix D1 means the bearing has lubrication holes and an oil groove. However, for bearing numbers 23138B(K) and over, the suffix D1 is not needed as the lubrication holes and oil groove are standard.

Note: The *d* dimension for the tapered bore is measured from the side of the bearing with the smallest bore dimension.

www.precise-rotation.ru

SERIES 232

Units: **INCHES**
Millimeters

Use Suffix L1 for brass cages.
Example: 23218BL1

Cylindrical Bore
232

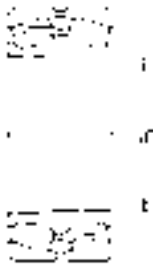

Tapered Bore
232K
Taper 1:12

SPHERICAL ROLLER BEARINGS

Bearing No. 232	Bearing No. 232K	Bore *d*	O.D. *D*	Width *B*	Fillet Radius *r*	Oil Groove Width *G*	Basic Load Ratings (lbs) *Dynamic C*	Basic Load Ratings (lbs) *Static C_o*
23218BD1	**23218BKD1**	**3.5433**	**6.2992**	**2.0630**	**.039**	**—**	**71,500**	**103,000**
		90	160	52.4	1.0	—		
23220BD1	**23220BKD1**	**3.9370**	**7.0866**	**3.3740**	**.083**	**—**	**91,000**	**130,000**
		100	180	60.3	2.1	—		
23222BD1	**23222BKD1**	**4.3307**	**7.8740**	**2.7480**	**.079**	**.39**	**115,000**	**171,000**
		110	200	69.8	2.0	10		
23224BD1	**23224BKD1**	**4.7244**	**8.4646**	**2.9921**	**.079**	**.39**	**132,000**	**198,000**
		120	215	76	2.0	10		
23226BD1	**23226BKD1**	**5.1181**	**9.0551**	**3.1496**	**.098**	**.39**	**154,000**	**239,000**
		130	230	80	2.5	10		
23228BD1	**23228BKD1**	**5.5118**	**9.8425**	**3.4646**	**.098**	**.39**	**181,000**	**285,000**
		140	250	88	2.5	10		
23230BD1	**23230BKD1**	**5.9055**	**10.6299**	**3.7705**	**.098**	**.47**	**210,000**	**330,000**
		150	270	96	2.5	12		
23232BD1	**23232BKD1**	**6.2992**	**11.4173**	**4.0945**	**.098**	**.47**	**237,000**	**375,000**
		160	290	104	2.5	12		
23234BD1	**23234BKD1**	**6.6929**	**12.2047**	**4.3307**	**.118**	**.47**	**264,000**	**440,000**
		170	310	110	3.0	12		
23236B	**23236BK**	**7.0866**	**12.5984**	**4.4094**	**.118**	**.47**	**284,000**	**465,000**
		180	320	112	3.0	12		
23238B	**23238BK**	**7.4803**	**13.3858**	**4.7244**	**.118**	**.47**	**320,000**	**530,000**
		190	340	120	3.0	12		
23240B	**23240BK**	**7.8740**	**14.1732**	**5.0394**	**.118**	**.47**	**365,000**	**595,000**
		200	360	128	3.0	12		
23244B	**23244BK**	**8.6614**	**15.7480**	**5.6693**	**.118**	**.47**	**440,000**	**730,000**
		220	400	144	3.0	12		
23248B	**23248BK**	**9.4488**	**17.3228**	**6.2992**	**.118**	**.63**	**535,000**	**900,000**
		240	440	160	3.0	16		
23252B	**23252BK**	**10.2362**	**18.8976**	**6.8504**	**.157**	**.63**	**620,000**	**1,060,000**
		260	480	174	4.0	16		
23256B	**23256BK**	**11.0236**	**19.6850**	**6.9291**	**.157**	**.63**	**660,000**	**1,160,000**
		280	500	176	4.0	16		
23260B	**23260BK**	**11.8110**	**21.2598**	**7.5591**	**.157**	**.79**	**775,000**	**1,350,000**
		300	540	192	4.0	20		
23264B	**23264BK**	**12.5984**	**22.8346**	**8.1890**	**.157**	**.79**	**890,000**	**1,560,000**
		320	580	208	4.0	20		
23268B	**23268BK**	**13.3858**	**24.4094**	**8.8189**	**.197**	**.79**	**990,000**	**1,760,000**
		340	620	224	5.0	20		
23272B	**23272BK**	**14.1732**	**25.5906**	**9.1339**	**.197**	**.94**	**1,090,000**	**1,950,000**
		360	650	232	5.0	24		
23276B	**23276BK**	**14.9606**	**26.7717**	**9.4488**	**.197**	**.94**	**1,170,000**	**2,170,000**
		380	680	240	5.0	24		
23280B	**23280BK**	**15.7480**	**28.3465**	**10.0787**	**.197**	**.94**	**1,330,000**	**2,420,000**
		400	720	256	5.0	24		
23284B	**23284BK**	**16.5354**	**29.9213**	**10.7087**	**.295**	**.94**	**1,450,000**	**2,660,000**
		420	760	272	7.5	24		
23288B	**23288BK**	**17.3228**	**31.1024**	**11.0236**	**.295**	**.94**	**1,530,000**	**2,850,000**
		440	790	280	7.5	24		
23292B	**23292BK**	**18.1102**	**32.6772**	**11.6535**	**.295**	**.94**	**1,730,000**	**3,200,000**
		460	830	296	7.5	24		
23296B	**23296BK**	**18.8976**	**34.2520**	**12.2047**	**.295**	**.94**	**1,880,000**	**3,550,000**
		480	870	310	7.5	24		
232/500B	**232/500BK**	**19.6850**	**36.2205**	**13.2283**	**.295**	**.94**	**2,120,000**	**4,000,000**
		500	920	336	7.5	24		
232/530B	**232/530BK**	**20.8661**	**38.5826**	**13.9764**	**.295**	**1.65**	**2,330,000**	**4,450,000**
		530	980	355	7.5	42		
232/560B	**232/560BK**	**22.0472**	**40.5511**	**14.3701**	**.374**	**1.65**	**2,490,000**	**4,750,000**
		560	1,030	365	9.5	42		
232/600B	**232/600BK**	**23.6220**	**42.9133**	**15.2756**	**.374**	**1.65**	**2,740,000**	**5,350,000**
		600	1,090	388	9.5	42		
232/630B	**232/630BK**	**24.8031**	**45.2755**	**16.2204**	**.374**	**1.65**	**3,100,000**	**6,050,000**
		630	1,150	412	9.5	42		
232/670B	**232/670BK**	**26.3779**	**48.0314**	**71.2441**	**.374**	**1.65**	**3,600,000**	**7,150,000**
		670	1220	438	9.5	42		
232/710B	**232/710BK**	**27.9527**	**50.3936**	**17.7165**	**.374**	**1.65**	**3,650,000**	**7,300,000**
		710	1280	450	9.5	42		
232/750B	**232/750BK**	**29.5275**	**53.5432**	**18.7008**	**.374**	**1.65**	**4,100,000**	**8,250,000**
		750	1,360	475	9.5	42		

The suffix D1 means the bearing has lubrication holes and an oil groove. However, for bearing numbers 23236B(K) and over, the suffix D1 is not needed as the lubrication holes and oil groove are standard.

Note: The d dimension for the tapered bore is measured from the side of the bearing with the smallest bore dimension.

SPHERICAL ROLLER BEARINGS

Bearing No. 239	Bearing No. 239K	Bore *d*	O.D. *D*	Width *B*	Fillet Radius *r*	Oil Groove Width *G*	Basic Load Ratings (lbs) *Dynamic C*	Basic Load Ratings (lbs) *Static C_o*
23926D1	**23926KD1**	**5.1181**	**7.0866**	**1.4567**	**.079**	**.28**	**48,000**	**85,000**
		130	180	37	2.0	7		
23932D1	**23932KD1**	**6.2992**	**8.6614**	**1.7717**	**.098**	**.31**	**72,500**	**138,000**
		160	220	45	2.5	8		
23934D1	**23934KD1**	**6.6929**	**9.0551**	**1.7717**	**.098**	**.31**	**74,500**	**146,000**
		170	230	45	2.5	8		
23936D1	**23936KD1**	**7.0866**	**9.8425**	**2.0472**	**.098**	**.31**	**99,500**	**188,000**
		180	250	52	2.5	8		
23938D1	**23938KD1**	**7.4803**	**10.2362**	**2.0472**	**.098**	**.39**	**103,000**	**200,000**
		190	260	52	2.5	10		
23940D1	**23940KD1**	**7.8740**	**11.0236**	**2.3622**	**.098**	**.39**	**123,000**	**247,000**
		200	280	60	2.5	10		
23944D1	**23944KD1**	**8.6614**	**11.8110**	**2.3622**	**.098**	**.39**	**127,000**	**263,000**
		220	300	60	2.5	10		
23948	**23948K**	**9.4488**	**12.5984**	**2.3622**	**.098**	**.47**	**127,000**	**267,000**
		240	320	60	2.5	12		
23952	**23952K**	**10.2362**	**14.1732**	**2.9528**	**.098**	**.47**	**171,000**	**355,000**
		260	360	75	2.5	12		
23956	**23956K**	**11.0236**	**14.9606**	**2.9528**	**.098**	**.47**	**187,000**	**395,000**
		280	380	75	2.5	12		
23960	**23960K**	**11.8110**	**16.5354**	**3.5433**	**.118**	**.47**	**249,000**	**520,000**
		300	420	90	3.0	12		
23964	**23964K**	**12.5984**	**17.3228**	**3.5433**	**.118**	**.47**	**257,000**	**555,000**
		320	440	90	3.0	12		
23968	**23968K**	**13.3858**	**18.1102**	**3.5433**	**.118**	**.47**	**274,000**	**595,000**
		340	460	90	3.0	12		
23972	**23972K**	**14.1732**	**18.8976**	**3.5433**	**.118**	**.47**	**298,000**	**660,000**
		360	480	90	3.0	12		
23976	**23976K**	**14.9606**	**20.4724**	**4.1732**	**.157**	**.63**	**350,000**	**795,000**
		380	520	106	4.0	16		
23980	**23980K**	**15.7480**	**21.2598**	**4.1732**	**.157**	**.63**	**355,000**	**820,000**
		400	540	106	4.0	16		
23984	**23984K**	**16.5354**	**22.0472**	**4.1732**	**.157**	**.63**	**365,000**	**865,000**
		420	560	106	4.0	16		
23988	**23988K**	**17.3228**	**23.6220**	**4.6457**	**.157**	**.63**	**455,000**	**1,050,000**
		440	600	118	4.0	16		
23992	**23992K**	**18.1102**	**24.4094**	**4.6457**	**.157**	**.63**	**470,000**	**1,110,000**
		460	620	118	4.0	16		
23996	**23996K**	**18.8976**	**25.5906**	**5.0394**	**.197**	**.79**	**525,000**	**1,240,000**
		480	650	128	5.0	20		
239/500	**239/500K**	**19.6850**	**26.3780**	**5.0394**	**.197**	**.79**	**535,000**	**1,260,000**
		500	670	128	5.0	20		
239/530	**239/530K**	**20.8661**	**27.5928**	**5.3543**	**.197**	**.79**	**595,000**	**1,450,000**
		530	710	136	5.0	20		
239/560	**239/560K**	**22.0472**	**29.5276**	**5.5118**	**.197**	**.79**	**635,000**	**1,500,000**
		560	750	140	5.0	20		
239/600	**239/600K**	**23.6220**	**31.4961**	**5.9055**	**.197**	**.79**	**710,000**	**1,750,000**
		600	800	150	5.0	20		
239/630	**239/630K**	**24.8031**	**33.4646**	**6.4961**	**.236**	**.79**	**830,000**	**2,080,000**
		630	850	165	6.0	20		
239/670	**239/670K**	**26.3780**	**35.4331**	**6.6929**	**.236**	**.79**	**925,000**	**2,330,000**
		670	900	170	6.0	20		
239/710	**239/710K**	**27.9528**	**37.4016**	**7.0866**	**.236**	**.79**	**995,000**	**2,580,000**
		710	950	180	6.0	20		
239/750	**239/750K**	**29.5276**	**39.3701**	**7.2835**	**.236**	**.79**	**1,130,000**	**2,930,000**
		750	1000	185	6.0	20		
239/800	**239/800K**	**31.4961**	**41.7323**	**7.6772**	**.236**	**.94**	**1,220,000**	**3,100,000**
		800	1060	195	6.0	24		
239/850	**239/850K**	**33.4646**	**44.0945**	**7.8740**	**.236**	**.94**	**1,310,000**	**3,400,000**
		850	1120	200	6.0	24		
239/900	**239/900K**	**35.4331**	**46.4567**	**8.1102**	**.236**	**.94**	**1,490,000**	**3,900,000**
		900	1180	206	6.0	24		

The suffix D1 means the bearing has lubrication holes and an oil groove. However, for bearing numbers 23948(K) and over, the suffix D1 is not needed as the lubrication holes and oil groove are standard.

Note: The d dimension for the tapered bore is measured from the side of the bearing with the smallest bore dimension.

Units: **INCHES**
Millimeters

SERIES 239

In this series, machined brass cages are also available. When placing an order for them, put the suffix L1 on the bearing number.

Example: 23932L1D1

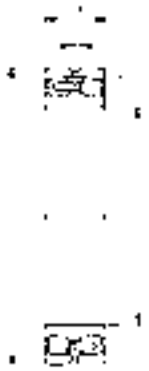

Cylindrical Bore
239

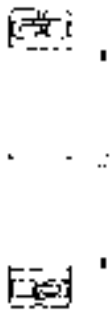

Tapered Bore
239K
Taper 1:12

SERIES 240

Units: **INCHES**
Millimeters

Bearing Numbers 24048B(K30) and under have machined brass cages. Machined brass cage are also available for bearing numbers 24052B(K30) and over. When placing an order for them, put the suffix L1 on the bearing number.

Example: 24052BL1

Cylindrical Bore
240

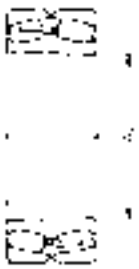

Tapered Bore
240K30
Taper 1:30

SPHERICAL ROLLER BEARINGS

Bearing No. 240	Bearing No. 240K30	Bore *d*	O.D. *D*	Width *B*	Fillet Radius *r*	Oil Groove Width *G*	Basic Load Ratings (lbs) *Dynamic C*	Basic Load Ratings (lbs) *Static* C_o
24024BD1	**24024BK30D1**	**4.7244**	**7.0866**	**2.3622**	**.098**	**.31**	**87,000**	**151,000**
		120	180	60	2.5	8		
24026BD1	**24026BK30D1**	**5.1181**	**7.8740**	**2.7165**	**.098**	**.31**	**114,000**	**201,000**
		130	200	69	2.5	8		
24028BD1	**24028BK30D1**	**5.5118**	**8.2677**	**2.7165**	**.098**	**.31**	**115,000**	**213,000**
		140	210	69	2.5	8		
24030BD1	**24030BK30D1**	**5.9055**	**8.8583**	**2.9528**	**.098**	**.31**	**131,000**	**238,000**
		150	225	75	2.5	8		
24032BD1	**24032BK30D1**	**6.2992**	**9.4488**	**3.1496**	**.098**	**.31**	**146,000**	**269,000**
		160	240	80	2.5	8		
24034BD1	**24034BK30D1**	**6.6929**	**10.2362**	**3.5433**	**.098**	**.39**	**180,000**	**330,000**
		170	260	90	2.5	10		
24036BD1	**24036BK30D1**	**7.0866**	**11.0236**	**3.9370**	**.098**	**.39**	**219,000**	**405,000**
		180	280	100	2.5	10		
24038BD1	**24038BK30D1**	**7.4803**	**11.4173**	**3.9370**	**.098**	**.39**	**224,000**	**415,000**
		190	290	100	2.5	10		
24040BD1	**24040BK30D1**	**7.8740**	**12.2047**	**4.2913**	**.098**	**.39**	**264,000**	**490,000**
		200	310	109	2.5	10		
24044B	**24044BK30**	**8.6614**	**13.3858**	**4.6457**	**.118**	**.47**	**305,000**	**580,000**
		220	340	118	3.0	12		
24048B	**24048BK30**	**9.4488**	**14.1732**	**4.6457**	**.118**	**.47**	**320,000**	**630,000**
		240	360	118	3.0	12		
24052B	**24052BK30**	**10.2362**	**15.7480**	**5.5118**	**.118**	**.47**	**410,000**	**800,000**
		260	400	140	3.0	12		
24056B	**24056BK30**	**11.0236**	**16.5354**	**5.5118**	**.118**	**.47**	**440,000**	**890,000**
		280	420	140	3.0	12		
24060B	**24060BK30**	**11.8110**	**18.1102**	**6.2992**	**.118**	**.47**	**550,000**	**1,120,000**
		300	460	160	3.0	12		
24064B	**24064BK30**	**12.5984**	**18.8976**	**6.2992**	**.118**	**.47**	**565,000**	**1,170,000**
		320	480	160	3.0	12		
24068B	**24068BK30**	**13.3858**	**20.4724**	**7.0866**	**.157**	**.63**	**675,000**	**1,390,000**
		340	520	180	4.0	16		
24072B	**24072BK30**	**14.1732**	**21.2598**	**7.0866**	**.157**	**.63**	**690,000**	**1,450,000**
		360	540	180	4.0	16		
24076B	**24076BK30**	**14.9606**	**22.0472**	**7.0866**	**.157**	**.63**	**715,000**	**1,560,000**
		380	560	180	4.0	16		
24080B	**24080BK30**	**15.7480**	**23.6220**	**7.8740**	**.157**	**.63**	**860,000**	**1,890,000**
		400	600	200	4.0	16		
24084B	**24084BK30**	**16.5354**	**24.4094**	**7.8740**	**.197**	**.63**	**870,000**	**1,900,000**
		420	620	200	5.0	16		
24088B	**24088BK30**	**17.3228**	**25.5906**	**8.3464**	**.236**	**.79**	**965,000**	**2,120,000**
		440	650	212	6.0	20		
24092B	**24092BK30**	**18.1102**	**26.7717**	**8.5827**	**.236**	**.79**	**1,030,000**	**2,280,000**
		460	680	218	6.0	20		
24096B	**24096BK30**	**18.8976**	**27.5591**	**8.5827**	**.236**	**.79**	**1,060,000**	**2,400,000**
		480	700	218	6.0	20		
240/500B	**240/500BK30**	**19.6850**	**28.3465**	**8.5827**	**.236**	**.79**	**1,090,000**	**2,500,000**
		500	720	218	6.0	20		

The suffix D1 means the bearing has lubrication holes and an oil groove. However, for bearing numbers 24044B(K) and over, the suffix D1 is not needed as the lubrication holes and oil groove are standard.

Note: The *d* dimension for the tapered bore is measured from the side of the bearing with the smallest bore dimension.

SPHERICAL ROLLER BEARINGS

Units: **INCHES**
Millimeters

NTN SERIES 241

Bearing No. 241	Bearing No. 241K30	Bore *d*	O.D. *D*	Width *B*	Fillet Radius *r*	Oil Groove Width *G*	Basic Load Ratings (lbs) *Dynamic C*	Basic Load Ratings (lbs) *Static* C_o
24122BD1	**24122BK30D1**	**4.3307**	**7.0866**	**2.7165**	**.098**	**.31**	**101,000**	**170,000**
		110	180	69	2.5	8		
24124BD1	**24124BK30D1**	**4.7244**	**7.8740**	**3.1496**	**.098**	**.31**	**129,000**	**213,000**
		120	200	80	2.5	8		
24126BD1	**24126BK30D1**	**5.1181**	**8.2677**	**3.1496**	**.098**	**.31**	**132,000**	**224,000**
		130	210	80	2.5	8		
24128BD1	**24128BK30D1**	**5.5118**	**8.8583**	**3.3465**	**.098**	**.31**	**151,000**	**257,000**
		140	225	85	2.5	8		
24130BD1	**24130BK30D1**	**5.9055**	**9.8425**	**3.9370**	**.098**	**.31**	**201,000**	**350,000**
		150	250	100	2.5	8		
24132BD1	**24132BK30D1**	**6.2992**	**10.6299**	**4.2913**	**.098**	**.39**	**234,000**	**400,000**
		160	270	109	2.5	10		
24134BD1	**24134BK30D1**	**6.6929**	**11.0236**	**4.2913**	**.098**	**.39**	**242,000**	**420,000**
		170	280	109	2.5	10		
24136BD1	**24136BK30D1**	**7.0866**	**11.8110**	**4.6457**	**.118**	**.39**	**280,000**	**495,000**
		180	300	118	3.0	10		
24138B	**24138BK30**	**7.4803**	**12.5984**	**5.0394**	**.118**	**.47**	**320,000**	**555,000**
		190	320	128	3.0	12		
24140B	**24140BK30**	**7.8740**	**13.3858**	**5.5118**	**.118**	**.47**	**365,000**	**650,000**
		200	340	140	3.0	12		
24144B	**24144BK30**	**8.6614**	**14.5669**	**5.9055**	**.157**	**.47**	**425,000**	**760,000**
		220	370	150	4.0	12		
24148B	**24148BK30**	**9.4488**	**15.7480**	**6.2992**	**.157**	**.47**	**475,000**	**860,000**
		240	400	160	4.0	12		
24152B	**24152BK30**	**10.2362**	**17.3228**	**7.0866**	**.157**	**.47**	**555,000**	**1,010,000**
		260	440	180	4.0	12		
24156B	**24156BK30**	**11.0236**	**18.1102**	**7.0866**	**.197**	**.47**	**605,000**	**1,150,000**
		280	460	180	5.0	12		
24160B	**24160BK30**	**11.8110**	**19.6850**	**7.8740**	**.197**	**.47**	**745,000**	**1,430,000**
		300	500	200	5.0	12		
24164B	**24164BK30**	**12.5984**	**21.2598**	**8.5827**	**.197**	**.63**	**865,000**	**1,640,000**
		320	540	218	5.0	16		
24168B	**24168BK30**	**13.3858**	**22.8346**	**9.5669**	**.197**	**.63**	**1,030,000**	**2,010,000**
		340	580	243	5.0	16		
24172B	**24172BK30**	**14.1732**	**23.6220**	**9.5669**	**.197**	**.63**	**1,040,000**	**2,090,000**
		360	600	243	5.0	16		
24176B	**24176BK30**	**14.9606**	**24.4094**	**9.5669**	**.197**	**.63**	**1,070,000**	**2,130,000**
		380	620	243	5.0	16		
24180B	**24180BK30**	**15.7480**	**25.5906**	**9.8425**	**.236**	**.79**	**1,140,000**	**2,330,000**
		400	650	250	6.0	20		
24184B	**24184BK30**	**16.5354**	**27.5591**	**11.0236**	**.236**	**.79**	**1,380,000**	**2,740,000**
		420	700	280	6.0	20		
24188B	**24188BK30**	**17.3228**	**28.3465**	**11.0236**	**.236**	**.79**	**1,450,000**	**2,940,000**
		440	720	280	6.0	20		
24192B	**24192BK30**	**18.1102**	**29.9213**	**11.8110**	**.295**	**.79**	**1,600,000**	**3,250,000**
		460	760	300	7.5	20		
24196B	**24196BK30**	**18.8976**	**31.1024**	**12.1260**	**.295**	**.79**	**1,690,000**	**3,500,000**
		480	790	308	7.5	20		
241/500B	**241/500BK30**	**19.6850**	**32.6772**	**12.7953**	**.295**	**.79**	**1,830,000**	**3,800,000**
		500	830	325	7.5	20		

The suffix D1 means the bearing has lubrication holes and an oil groove. However, for bearing numbers 24138B(K30) and over, the suffix D1 is not needed as the lubrication holes and oil groove are standard.

Note: The d dimension for the tapered bore is measured from the side of the bearing with the smallest bore dimension.

Bearing numbers 24144B(K30) and under have machined brass cages. Machined brass cages are also available for bearing numbers 24148B(K30) and over. When placing an order for them, put the suffix L1 on the bearing number.

Example: 24148BL1

Cylindrical Bore
241

Tapered Bore
241K30
Taper 1:30

SERIES 223 UAVS1

SHAKER SCREEN BEARINGS

Units: **INCHES**
Millimeters

The cage is made of machined brass.

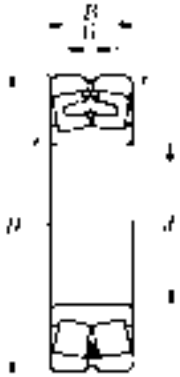

223

SPHERICAL ROLLER BEARINGS

Bearing. No.	Bore *d*	O.D. *D*	Width *B*	Fillet Radius *r*	Oil Groove Width *G*	Basic Load Ratings (lbs) *Dynamic C*	Basic Load Ratings (lbs) *Static* C_o
22314UAVS1	**2.7559**	**5.9055**	**2.0079**	**.098**	**.31**	**77,000**	**92,500**
	70	150	51	2.5	8		
22315UAVS1	**2.9528**	**6.2992**	**2.1654**	**.098**	**.31**	**86,500**	**112,000**
	75	160	55	2.5	8		
22316UAVS1	**3.1496**	**6.6929**	**2.2835**	**.098**	**.31**	**94,500**	**118,000**
	80	170	58	2.5	8		
22317UAVS1	**3.3465**	**7.0866**	**2.3622**	**.118**	**.31**	**102,000**	**128,000**
	85	180	60	3.0	8		
22318UAVS1	**3.5433**	**7.4803**	**2.5197**	**.118**	**.39**	**116,000**	**146,000**
	90	190	64	3.0	10		
22319UAVS1	**3.7402**	**7.8740**	**2.6378**	**.118**	**.39**	**127,000**	**162,000**
	95	200	67	3.0	10		
22320UAVS1	**3.9370**	**8.4646**	**2.8740**	**.118**	**.39**	**151,000**	**194,000**
	100	215	73	3.0	10		
22322UAVS1	**4.3307**	**9.4488**	**3.1496**	**.118**	**.39**	**188,000**	**244,000**
	110	240	80	3.0	10		
22324UAVS1	**4.7244**	**10.2362**	**3.3858**	**.118**	**.47**	**212,000**	**276,000**
	120	260	86	3.0	12		
22326UAVS1	**5.1181**	**11.0236**	**3.6614**	**.157**	**.47**	**246,000**	**325,000**
	130	280	93	4.0	12		
22328UAVS1	**5.5118**	**11.8110**	**4.0157**	**.157**	**.47**	**287,000**	**385,000**
	140	300	102	4.0	12		
22330UAVS1	**5.9055**	**12.5984**	**4.2520**	**.157**	**.47**	**320,000**	**460,000**
	150	320	108	4.0	12		
22332UAVS1	**6.2992**	**13.3858**	**4.4882**	**.157**	**.47**	**345,000**	**495,000**
	160	340	114	4.0	12		
22334UAVS1	**3.6929**	**14.1732**	**4.7244**	**.157**	**.47**	**385,000**	**565,000**
	170	360	120	4.0	12		
22336UAVS1	**7.0866**	**14.9606**	**4.9606**	**.157**	**.47**	**435,000**	**655,000**
	180	380	126	4.0	12		
22338UAVS1	**7.4803**	**15.7480**	**5.1969**	**.197**	**.47**	**470,000**	**720,000**
	190	400	132	5.0	12		
22340UAVS1	**7.8740**	**16.5354**	**5.4331**	**.197**	**.63**	**500,000**	**765,000**
	200	420	138	5.0	16		

The suffix VS1 means the bearing has controlled O.D., bore and radial clearance for shaker screen application.

Note: Lubrication holes and oil groove provided as standard; suffix D1 not needed.

SPHERICAL ROLLER BEARINGS

Units: Millimeters
INCHES

SERIES MX-W222

SEALED BEARINGS

Bearing No. MX-W222K	Bore *d*	O.D. *D*	Width *B*	Fillet Radius *r*	Oil Groove Width *G*	Basic Load Ratings (lbs) *Dynamic C*	*Static C*
MX-W22211BLLKC3	55 2.1654	100 3.9370	40 1.5748	0.60 0.024	6 0.2362	21,000	24,700
MX-W22213BLLKC3	65 2.5591	120 4.7244	46.5 1.8307	0.60 0.024	6 0.2362	32,000	40,000
MX-W22215BLLKC3	75 2.9528	130 5.1181	46.5 1.8307	0.60 0.024	8 0.3150	37,500	50,000
MX-W22217BLLKC3	85 3.3465	150 5.9055	51.5 2.0276	0.60 0.024	8 0.3150	46,500	61,000
MX-W22220BLLKC3	100 3.9370	180 7.0866	64.5 2.5394	1.0 0.039	8 0.3150	69,500	92,000
MX-W22222BLLKC3	110 4.3307	200 7.8740	71 2.7953	1.0 0.039	8 0.3150	92,000	128,000
MX-W22224BLLKC3	120 4.7244	215 8.4646	76 2.9921	1.0 0.039	10 0.3937	109,000	157,000
MX-W22226BLLKC3	130 5.1181	230 9.0551	84 3.3071	1.0 0.039	10 0.3937	127,000	176,000
MX-W22228BLLKC3	140 5.5118	250 9.8425	88 3.4627	1.0 0.039	10 0.3937	153,000	218,000
MX-W22232BLLKC3	160 6.2992	290 11.4173	104 4.0945	1.0 0.039	12 0.4724	196,000	290,000

Tapered Bore
MX-W222K
Taper 1:12

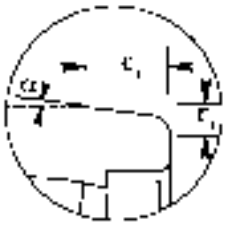

*Detail:

For outside diameter chamfer dimensions, contact NTN Engineering.

Note: The *d* dimensions for the tapered bore is measured from the side of the bearing with the smallest bore dimension. Lubrication holes and oil groove provided as standard, suffix D1 not needed.

NTN BEARING WEIGHTS

Bearing Series → **213 SERIES**

21308C 1.55

Bearing Number → 21308C

Weight (lbs) → 1.55

SPHERICAL ROLLER BEARINGS — LBS.

213 SERIES

21308C	1.55	21308CK	1.53
21309C	2.04	21309CK	2.01
21310C	2.67	21310CK	2.62
21311	3.77	21311K	3.73
21312	4.63	21312K	4.56
21313	5.62	21313K	5.53
21314	7.01	21314K	6.92
21315	8.40	21315K	8.29
21316	9.99	21316K	9.85
21317	11.8	21317K	11.6
21318	13.9	21318K	13.7
21319	15.7	21319K	15.4
21320	19.6	21320K	19.4

222 SERIES

22208C	1.16	22208CK	1.14
22209C	1.55	22209CK	1.53
22210C	2.15	22210CK	2.10
22211B	1.87	22211BK	1.83
22212B	2.54	22212BK	2.49
22213B	3.31	22213BK	3.24
22214B	3.42	22214BK	3.35
22215B	3.64	22215BK	3.55
22216B	4.74	22216BK	4.65
22217B	5.86	22217BK	5.75
22218B	7.72	22218BK	7.56
22219B	9.04	22219BK	8.84
22220BD1	10.9	22220BKD1	10.7
22222BD1	15.9	22222BKD1	15.5
22224BD1	20.1	22224BKD1	19.6
22226BD1	24.7	22226BKD1	24.0
22228BD1	30.9	22228BKD1	30.2
22230BD1	39.9	22230BKD1	39.0
22232BD1	50.0	22232BKD1	48.9
22234BD1	61.7	22234BKD1	60.2
22236B	64.6	22236BK	63.1
22238B	80.7	22238BK	78.9
22240B	97.0	22240BK	94.8
22244B	133	22244BK	130
22248B	180	22248BK	176
22252B	234	22252BK	229
22256B	247	22256BK	243
22260B	311	22260BK	304

223 SERIES

22308C	2.15	22308CK	2.10
22309C	2.93	22309CK	2.87
22310C	3.95	22310CK	3.86
22311B	5.07	22311BK	4.96
22312B	6.39	22312BK	6.24
22313B	7.61	22313BK	7.43
22314B	9.30	22314BK	9.08
22315B	11.6	22315BK	11.3
22316B	13.3	22316BK	13.0
22317BD1	15.7	22317BKD1	15.3
22318BD1	18.4	22318BKD1	18.0
22319BD1	21.5	22319BKD1	21.0
22320BD1	27.3	22320BKD1	26.7
22322BD1	37.7	22322BKD1	36.8
22324BD1	47.4	22324BKD1	46.3
22326BD1	59.1	22326BKD1	57.8
22328BD1	74.5	223288KD1	72.8
22330B	94.1	22330BK	92.2
22332B	112	22332BK	110
22334B	132	22334BK	129
22336B	154	22336BK	151
22338B	179	22338BK	175
22340B	205	22340BK	201
22344B	258	22344BK	254
22348B	326	22348BK	320
22352B	403	22352BK	395
22356B	494	22356BK	485
22360B	595	22360BK	584

230 SERIES

23022B	8.18	23022BK	7.89
23024BD1	8.93	23024BKD1	8.60
23026BD1	13.0	23026BKD1	12.5
23028BD1	14.0	23028BKD1	13.5
23030BD1	17.0	23030BKD1	16.4
23032BD1	20.8	23032BKD1	20.0
23034BD1	28.0	23034BKD1	27.1
23036BD1	36.8	23036BKD1	35.5
23038BD1	39.0	23038BKD1	37.7
23040BD1	50.0	23040BKD1	48.3
23044B	65.9	23044BK	63.5
23048B	73.6	23048BK	71.0
23052B	107	23052BK	103
23056B	116	23056BK	112
23060B	160	23060BK	155
23064B	172	23064BK	166
23068B	229	23068BK	220
23072B	243	23072BK	234
23076B	254	23076BK	245
23080B	328	23080BK	317
23084B	346	23084BK	335
23088B	399	23088BK	386
23092B	454	23096BK	441
23096B	478	23096BK	461
230/500B	498	230/500BK	481
230/530B	675	230/530BK	650
230/560B	778	239/560BK	750
230/600B	882	230/600BK	851
230/630B	1060	230/630BK	1010
230/670B	1310	230/670BK	1260
230/710B	1460	230/710BK	1410
230/750B	1740	230/750BK	1680

231 SERIES

23122BD1	11.9	23122BKD1	11.5
23124BD1	17.0	23122BKD1	16.4
23126BD1	18.7	23126BKD1	18.1
23128BD1	22.5	23128BKD1	21.7
23130BD1	34.4	23130BKD1	33.3
23132BD1	43.7	23132BKD1	42.3
23134BD1	47.4	23134BKD1	45.9
23136BD1	55.3	23136BKD1	53.4
23138B	77.8	23138BK	75.4
23140B	95.5	23140BK	92.6
23144B	118	23144BK	114
23148B	145	23148BK	141
23152B	202	23152BK	195
23156B	215	23156BK	209
23160B	289	23160BK	280
23164B	368	23164BK	357
23168B	463	23168BK	450
23172B	489	23172BK	474
23176B	518	23176BK	503
23180B	582	23180BK	564
23184B	780	23184BK	756
23188B	816	23188BK	789
23192B	977	23192BK	946
23196B	1080	23196BK	1050
231/500B	1290	231/500BK	1250
231/530B	1440	231/530BK	1400
231/560B	1660	231/560BK	1610
231/600B	2000	231/600BK	1940
231/630B	2310	231/630BK	2250
231/670B	2760	231/670BK	2670
231/710B	3130	231/710BK	3040

Continued next page …

Bearing Series → **213 SERIES**

21308C 1.55

Bearing Number

Weight (lbs)

NTN BEARING WEIGHTS

SPHERICAL ROLLER BEARINGS — LBS.

MX-W SERIES

MX-W22211BLLC3	2.6	MX-W22211BLLKC3	2.6
MX-W22213BLLC3	4.2	MX-W22213BLLKC3	4.2
MX-W22215BLLC3	4.6	MX-W22215BLLKC3	4.6
MX-W22217BLLC3	6.2	MX-W22217BLLKC3	6.2
MX-W22220BLLC3	13.0	MX-W22220BLLKC3	13.0
MX-W22222BLLC3	18.7	MX-W22222BLLKC3	18.7
MX-W22224BLLC3	24.0	MX-W22224BLLKC3	24.0
MX-W22226BLLC3	28.4	MX-W22226BLLKC3	28.4
MX-W22228BLLC3	36.2	MX-W22228BLLKC3	36.2
MX-W22232BLLC3	59.5	MX-W22232BLLKC3	59.5

232 SERIES

23218B	9.81	23218BK	9.52
23220B	14.3	23220BK	13.8
23222BD1	21.4	23222BKD1	20.8
23224BD1	26.7	232244BKD1	25.8
23226BD1	31.5	23226BKD1	30.6
23228BD1	41.4	23228BKD1	40.1
23230BD1	53.1	23230BKD1	51.6
23232BD1	66.1	23232BKD1	64.2
23234BD1	81.1	23234BKD1	78.7
23236B	86.0	23236BK	83.3
23238B	105	23238BK	102
23240B	126	23240BK	122
23244B	176	23244BK	171
23248B	238	23248BK	231
23252B	311	23252BK	302
23256B	331	23256BK	320
23260B	425	23260BK	412
23264B	536	23264BK	520
23268B	661	23268BK	642
23272B	747	23272BK	725
23276B	838	23276BK	814
23280B	1010	23280BK	977
23284B	1200	23284BK	1160
23288B	1320	23288BK	1280
23292B	1550	23292BK	1510
23296B	1790	23296BK	1740
232/500B	2200	232/500BK	2140
232/530B	2650	232/530BK	2580
232/560B	3000	232/560BK	2910
232/600B	3400	232/600BK	3280
232/630B	4190	232/630BK	4060
232/670B	5000	232/670BK	4850
232/710B	5600	232/710BK	5450
232/750B	6720	232/750BK	6530

239 SERIES

23932D1	12.1	23932KD1	11.8
23934D1	12.8	23934KD1	12.4
23936D1	18.1	23936KD1	17.5
23938D1	19.0	23938KD1	18.4
23940D1	26.7	23940KD1	25.8
23944D1	28.9	23944KD1	28.0
23948	30.9	23948K	30.0
23952	52.9	23952K	51.4
23956	58.2	23956K	56.4
23960	88.2	23960K	85.3
23964	94.8	23964K	91.9
23968	98.5	23968K	95.5
23972	104	23972K	101
23976	154	23976K	149
23980	161	23980K	156
23984	168	23984K	163
23988	223	23988K	216
23992	236	23992K	229
23996	271	23996K	262
239/500	289	239/500K	280
239/530	346	239/530K	335
239/560	401	239/560K	388
239/600	481	239/600K	465
239/630	611	239/630K	591
239/670	699	239/670K	677
239/710	827	239/710K	800
239/750	908	239/750K	880
239/800	1070	239/800K	1040
239/850	1210	239/850K	1170
239/900	1370	239/900K	1330

240 SERIES

24024BD1	12.1	24024BK30D1	11.9
24026BD1	17.8	24026BK30D1	17.5
24028BD1	18.9	24028BK30D1	18.6
24030BD1	23.6	24030BK30D1	23.1
24032BD1	28.7	24032BK30D1	28.2
24034BD1	39.0	24034BK30D1	38.4
24036BD1	51.4	24036BK30D1	50.5
24038BD1	53.6	24038BK30D1	52.7
24040BD1	68.3	24040BK30D1	67.2
24044B	88.6	24044BK30	87.3
24048B	94.8	24048BK30	93.3
24052B	144	24052BK30	141
24056B	152	24056BK30	150
24060B	216	24060BK30	213
24064B	227	24064BK30	223
24068B	309	24068BK30	304
24072B	324	24072BK30	320
24076B	337	24076BK30	331
24080B	445	24080BK30	441
24084B	463	24084BK30	456
24088B	540	24088BK30	531
24092B	608	24092BK30	600
24096B	628	24096BK30	617
240/500B	650	240/500BK30	639

241 SERIES

24122BD1	15.6	24122BK30D1	15.3
24124BD1	22.7	24124BK30D1	22.3
24126BD1	24.3	24126BK30D1	23.8
24128BD1	29.3	24128BK30D1	28.9
24130BD1	44.5	24130BK30D1	44.1
24132BD1	57.3	24132BK30D1	56.4
24134BD1	60.0	24134BK30D1	59.1
24136BD1	75.6	24136BK30D1	74.5
24138B	94.4	24138BK30	93.0
24140B	118	24140BK30	116
24144B	148	24144BK30	146
24148B	181	24148BK30	178
24152B	251	24152BK30	247
24156B	265	24156BK30	260
24160B	355	24160BK30	351
24164B	567	24164BK30	450
24168B	593	244168BK30	584
24172B	619	24172BK30	611
24176B	644	24176BK30	633
24180B	725	24180BK30	714
24184B	970	24184BK30	955
24188B	1010	24188BK30	990
24192B	1210	24192BK30	1190
24196B	1340	24196BK30	1320
241/500B	1580	241/500BK30	1550

22314UAVS1 SERIES

22314UAVS1	9.48
22315UAVS1	11.6
22316UAVS1	13.8
22317UAVS1	16.0
22318UAVS1	19.1
22319UAVS1	21.9
22320UAVS1	28.4
22322UAVS1	39.9
22324UAVS1	48.1
22326UAVS1	62.4
22328UAVS1	75.9
22330UAVS1	91.1
22332UAVS1	108
22334UAVS1	132
22336UAVS1	149
22338UAVS1	174
22340UAVS1	199

NTN
ADAPTERS

- Accurate and finely ground tapered surface
- Minimal eccentricity
- Narrow slot type (Bore nos. –05 to 13)
- Precisely Machined screw thread

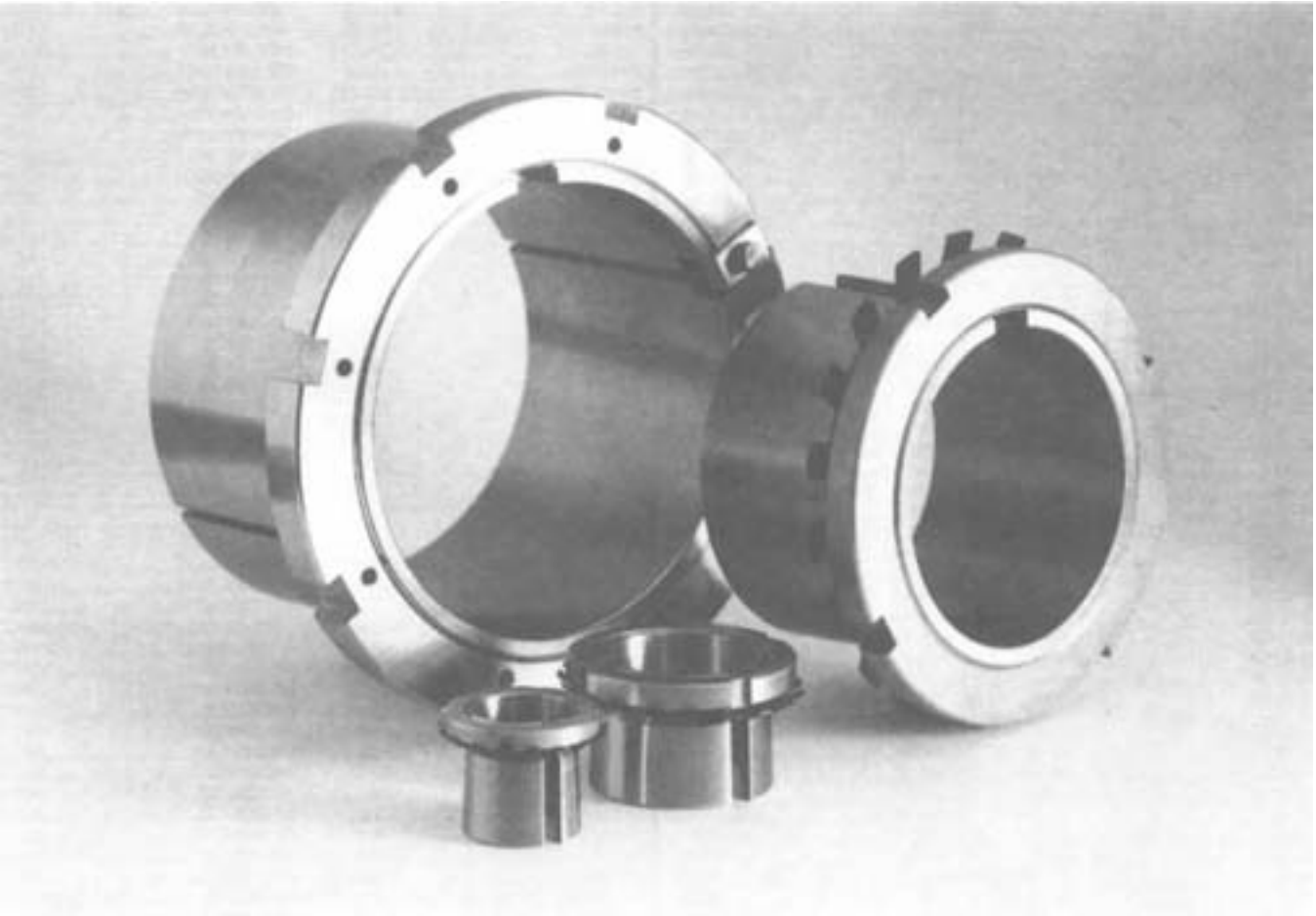

Note:

The Lockwasher with the straight inner tab must be used with the narrow slot type of adapter sleeve (suffix X)

Either the bent tab or the strait tab type may be used with the wide slot type of adapter sleeve (without suffix X).

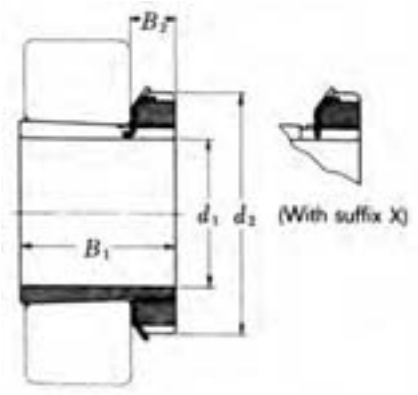

NTN

SERIES H2, HE2, HS2, HA2

H3, HE3, HS3, HA3

Adapter No.				d_1				B_1		d_2	B_2	Weight	
H	HE	HS	HA	H mm	HE in.	HS in.	HA in.	mm	in.	mm	mm	kg	lbs.
H204	—	—	—	17	—	—	—	24	0.945	32	7	0.041	0.090
H205X	HE205	—	—	20	¾	—	—	26	1.024	38	8	0.070	0.154
H206X	HE206	HS206	HA206	25	1	⅞	15/16	27	1.063	45	8	0.099	0.218
H207X	—	HS207	HA207X	30	—	1 ⅛	1 3/16	29	1.142	52	9	0.125	0.276
H208X	HE208X	HS208X	HA208X	35	1 ¼	1 ⅜	1 5/16	31	1.220	58	10	0.174	0.384
H209X	HE209X	HS209	HA209	40	1 ½	1 ⅝	1 7/16	33	1.299	65	11	0.227	0.500
H210X	HE210X	HS210	HA210	45	1 ¾	1 ⅝	1 11/16	35	1.378	70	12	0.274	0.604
H211X	HE211XY	HS211	HA211	50	2	1 ⅞	1 15/16	37	1.457	75	12	0.308	0.679
H213X	—	HS212	—	55	—	2 ⅛	—	38	1.496	80	13	0.346	0.763
H213X	HE213X	HS213	HA213	60	2 ¼	2 ⅜	2 3/16	40	1.575	85	14	0.401	0.884
H215X	HE215X	—	HA215	65	2 ½	—	2 7/16	43	1.693	98	15	0.707	1.560
H216X	HE216X	—	HA216	70	2 ¾	—	2 11/16	46	1.811	105	17	0.882	1.940
H217X	HE217X	—	HA217X	75	3	—	2 15/16	50	1.969	110	18	1.020	2.250
H218X	—	—	HA218	80	—	—	3 3/16	52	2.047	120	18	1.190	2.620
H219X	HE219X	—	—	85	3 ¼	—	—	55	2.165	125	19	1.370	3.020
H220X	HE220X	—	HA220	90	3 ½	—	3 7/16	58	2.283	130	20	1.490	3.280
H222X	HE222X	—	HA222X	100	4	—	3 15/16	63	2.480	145	21	1.930	4.250

Adapter No.				d_1				B_1		d_2	B_2	Weight	
H	HE	HS	HA	H mm	HE in.	HS in.	HA in.	mm	in.	mm	mm	kg	lbs.
H304	—	—	—	17	—	—	—	28	1.102	32	7	0.045	0.099
H305X	HE305	—	—	20	¾	—	—	29	1.142	38	8	0.075	0.165
H306X	HE306X	HS306	HA306	25	1	⅞	15/16	31	1.220	45	8	0.109	0.240
H307X	—	HS307	HA307X	30	—	1 ⅛	1 3/16	35	1.378	52	9	0.142	0.313
H308X	HE308X	HS308X	HA308X	35	1 ¼	1 ⅜	1 5/16	36	1.417	58	10	0.189	0.417
H309X	HE309X	HS309	HA309	40	1 ½	1 ⅝	1 7/16	39	1.535	65	11	0.248	0.547
H310X	HE310X	HS310	HA310	45	1 ¾	1 ⅝	1 11/16	42	1.654	70	12	0.303	0.668
H311X	HE311XY	HS311	HA311	50	2	1 ⅞	1 15/16	45	1.772	75	12	0.345	0.761
H312X	—	HS312	HA312	55	—	2 ⅛	—	47	1.850	80	13	0.394	0.869
H313X	HE313X	HS313	HA313	60	2 ¼	2 ⅜	2 3/16	50	1.969	85	14	0.458	1.010
H315X	HE315X	—	HA315	65	2 ½	—	2 7/16	55	2.165	98	15	0.831	1.830
H316X	HE316X	—	HA316	70	2 ¾	—	2 11/16	59	2.323	105	17	1.030	2.270
H317X	HE317X	—	HA317X	75	3	—	2 15/16	63	2.480	110	18	1.180	2.600
H318X	—	—	HA318	80	—	—	3 3/16	65	2.559	120	18	1.370	3.020
H319X	HE319X	—	—	85	3 ¼	—	—	68	2.677	125	19	1.560	3.440
H320X	HE320X	—	HA320	90	3 ½	—	3 7/16	71	2.795	130	20	1.690	3.730
H322X	HE322X	—	HA322X	100	4	—	3 15/16	77	3.031	145	21	2.180	4.810

Notes: 1. The adapter no. denotes the complete assembly of adapter sleeve, locknut and lockwasher or lockplate.
2. Suffix X denotes the narrow slot type of adapter sleeve. The straight inner tab type of lockwasher (also denoted by suffix X) should be used with sleeve.
3. Suffix Y denotes a non-standard thread. This is necessary in certain cases because of the thin section of the sleeve.
4. The weights given in above table are for adapters of type H. There is little difference in the weights of other types of the same size.

SERIES
H 23
HE23
HS23
HA23

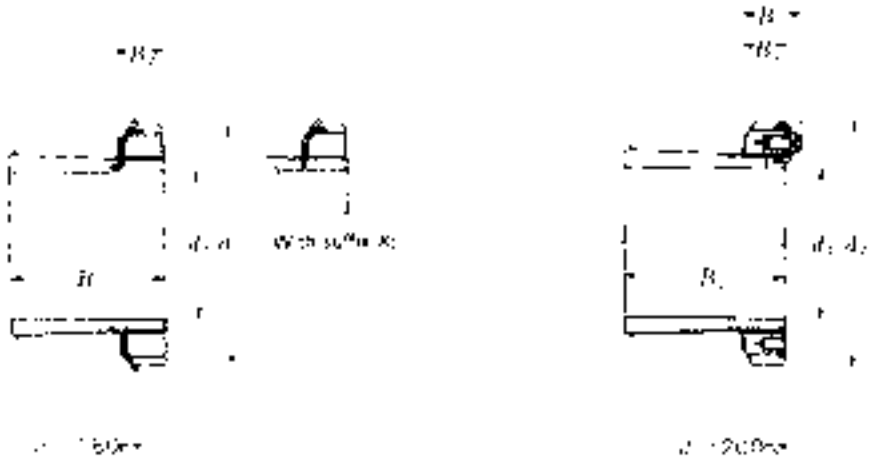

Adapter No.				d_1				B_1		d_2	B_2	B_3*	Weight	
H	HE	HS	HA	H mm	HE in.	HS in.	HA in.	mm	in.	mm	mm	mm	kg	lbs.
H2304	—	—	—	17	—	—	—	31	1.102	32	7	—	0.049	0.108
H2305X	HE2305	—	—	20	¾	—	—	35	1.142	38	8	—	0.087	0.192
H2306X	HE2306X	HS2306	—	25	1	⅞	—	38	1.220	45	8	—	0.126	0.278
H2307X	—	HS2307	—	30	—	1 ⅛	—	43	1.378	52	9	—	0.165	0.364
H2308X	HE2308X	HS2308X	—	35	1 ¼	1 ⅜	—	46	1.417	58	10	—	0.224	0.494
H2309X	HE2309X	HS2309X	HA2309	40	1 ½	1 ⅝	1 7/16	50	1.535	65	11	—	0.280	0.617
H2310X	HE2310X	HS2310	HA2310	45	1 ¾	1 ⅝	1 11/16	55	1.654	70	12	—	0.362	0.798
H2311X	HE2311XY	HS2311	HA2311	50	2	1 ⅞	1 15/16	59	1.772	75	12	—	0.420	0.926
H2312X	—	HS2312	—	55	—	2 ⅛	—	62	1.850	80	13	—	0.481	1.06
H2313X	HE2313X	HS2313X	HA2313	60	2 ¼	2 ⅜	2 3/16	65	1.969	85	14	—	0.557	1.23
H2315X	HE2315X	—	HA2315	65	2 ½	—	2 7/16	73	2.165	98	15	—	1.050	2.31
H2316X	HE2316X	—	HA2316	70	2 ¾	—	2 11/16	78	2.323	105	17	—	1.280	2.82
H2317X	HE2317X	—	HA2317X	75	3	—	2 15/16	82	2.480	110	18	—	1.450	3.20
H2318X	—	—	HA2318	80	—	—	3 3/16	86	2.559	120	18	—	1.690	3.73
H2319X	HE2319X	—	—	85	3 ¼	—	—	90	2.677	125	19	—	1.920	4.23
H2320X	HE2320X	—	HA2320	90	3 ½	—	3 7/16	97	2.795	130	20	—	2.150	4.74
H2322X	HE2322X	—	HA2322X	100	4	—	3 15/16	105	3.031	145	21	—	2.740	6.04
H2324X	HE2324	—	HA2324	110	4 ¼		4 3/16	112	4.409	155	22	—	3.190	7.03
H2326	HE2326	—	HA2326	115	4 ½		4 7/16	121	4.764	165	23	—	4.600	10.1
H2328	HE2328	—	HA2328	125	5		4 15/16	131	5.157	180	24	—	5.550	12.2
H2330	HE2330	—	HA2330	135	5 ¼		5 3/16	139	5.472	195	26	—	6.630	14.6
H2332	HE2332	—	HA2332	140	5 ½		5 7/16	147	5.787	210	28	—	9.140	20.2
H2334	HE2334	—	HA2334	150	6		5 15/16	154	6.063	220	29	—	10.200	22.5
H2336	HE2336	—	HA2336	160	6 ¼		6 7/16	161	6.339	230	30	—	11.300	24.9
H2338	HE2338	—	HA2338	170	6 ½		6 15/16	169	6.654	240	31	—	12.600	27.8
H2340	HE2340	—	HA2340	180	7		7 3/16	176	6.929	250	32	—	13.900	30.6
H2344	—	—	—	200	—		—	183	7.205	280	32	44	16.700	36.8
H2348	—	—	—	220	—		—	196	7.717	300	34	46	19.700	43.4
H2352	—	—	—	240	—		—	208	8.189	330	36	49	24.200	53.4
H2356	—	—	—	260	—		—	221	8.701	350	38	51	27.800	61.3

* Adapters with the dimension B_3 have a locking device as shown in the right illustration.

Notes:
1. The adapter no. denotes the complete assembly of adapter sleeve, locknut and lockwasher or lockplate.
2. Suffix X denotes the narrow slot type of adapter sleeve. The straight inner tab type of lockwasher (also denoted by suffix X) should be used with sleeve.
3. Suffix Y denotes a non-standard thread. This is necessary in certain cases because of the thin section of the sleeve.
4. The weights given in above table are for adapters of type H. There is little difference in the weights of other types of the same size.

NTN

SERIES
H 31
HE31
HA31

Adapter No.			d_1			B_1		d_2	B_2	B_3*	Weight	
H	HE	HA	H mm	HE in.	HA in.	mm	in.	mm	mm	mm	kg	lbs.
H3122X	HE3122X	HA3122	100	4	3 15/16	81	3.189	145	21	—	2.250	4.96
H3124X	HE3124X	HA3124	110	4 1/4	4 3/16	88	3.465	155	22	—	2.640	5.82
H3126	HE3126	HA3126	115	4 1/2	4 7/16	92	3.622	165	23	—	3.660	8.07
H3128	HE3128	HA3128	125	5	4 15/16	97	3.819	180	24	—	4.340	9.57
H3130	HE3130	HA3130	135	5 1/4	5 3/16	111	4.370	195	26	—	5.520	12.2
H3132	HE3132	HA3132	140	5 1/2	5 7/16	119	4.685	210	28	—	7.670	16.9
H3134	HE3134	HA3134	150	6	5 15/16	122	4.803	220	29	—	8.380	18.5
H3136	HE3136	HA3136	160	6 1/2	6 7/16	131	5.157	230	30	—	9.500	20.9
H3138	HE3138	HA3138	170	6 3/4	6 15/16	141	5.551	240	31	—	10.800	23.8
H3140	HE3140	HA3140	180	7	7 3/16	150	5.906	250	32	—	12.100	26.7
H3144	—	HA3144	200	—	7 15/16	158	6.220	280	32	44	14.700	32.4
H3148	—	—	220	—	—	169	6.654	300	34	46	17.300	38.1
H3152	—	—	240	—	—	187	7.362	330	36	49	22.000	48.5
H3156	—	—	260	—	—	192	7.559	350	38	51	24.500	54.0
H3160	—	—	280	—	—	208	8.189	380	40	53	30.200	66.6
H3164	—	—	3000	—	—	226	8.898	400	42	56	34.900	77.0
H3168	—	—	320	—	—	254	10.000	440	55	72	49.500	109
H3172	—	—	340	—	—	259	10.197	460	58	75	54.200	119
H3176	—	—	360	—	—	264	10.394	490	60	77	61.700	136
H3180	—	—	380	—	—	272	10.709	520	62	82	70.600	156
H3184	—	—	400	—	—	304	11.969	540	70	90	84.200	186
H3188	—	—	410	—	—	307	12.087	560	70	90	104.000	229
H3192	—	—	430	—	—	326	12.835	580	75	95	116.000	256
H3196	—	—	450	—	—	335	13.189	620	75	95	133.000	293
H31/500	—	—	470	—	—	356	14.016	630	80	100	143.000	315

* Adapters with the dimension B_3 have a locking device as shown in the right illustration.

Notes: The weights given in above table are for adapters of type H. There is little difference in the weights of other types of the same size.

NTN

LOCKNUTS AND LOCKWASHERS

INCH

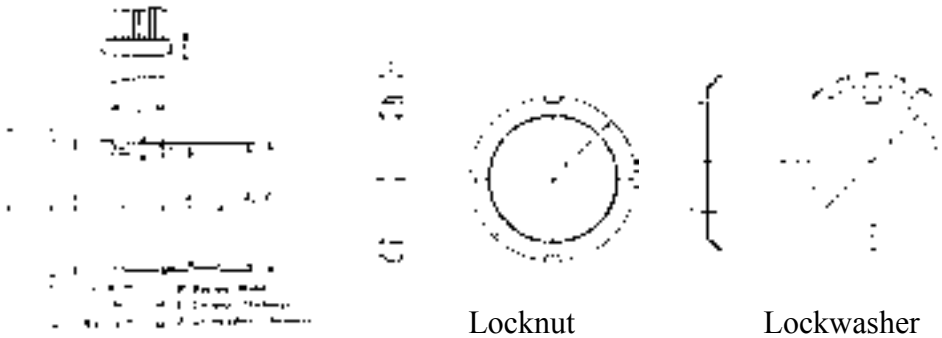

LOCKNUTS AND LOCKWASHERS

For Bearing with this Bore Number	LOCKNUT NUMBER	LOCKWASHER NUMBER	Shaft Dimensions: d Nominal (mm)	d Nominal (inch)	d_3 Thread O. D. Maximum	d_3 Tolerance +.0000	d_2 Thread Pitch Diameter Maximum	d_2 Tolerance +.0000	Threads per inch	d_1 (inch) Extension Diameter Maximum	C (inch)	G (inch)	I (inch)	E (inch)	Locknut Dimensions: D_1 (inch)	L (inch)	Lockwasher Dimensions: T (inch)	d_4 (inch)
05	N05	W05	25	.9843	.969	-.0054	.9487	-.0034	32	7/8	15/32	19/32	1/16	3/16	1 9/16	13/32	.050	1.000
06	N06	W06	30	1.1811	1.173	-.0082	1.1369	-.0040	18	1 1/16	15/32	19/32	3/32	3/16	1 3/4	13/32	.050	1.199
07	N07	W07	35	1.3780	1.376	-.0082	1.3399	-.0040	18	1 1/4	1/2	5/8	3/32	3/16	2 1/16	7/16	.050	1.407
08	N08	W08	40	1.5748	1.563	-.0082	1.5269	-.0045	18	1 15/32	17/32	21/32	3/32	5/16	2 1/4	7/16	.058	1.593
09	N09	W09	45	1.7717	1.767	-.0082	1.7309	-.0045	18	1 11/16	17/32	11/16	1/8	5/16	2 17/32	7/16	.058	1 13/16
10	N10	W10	50	1.9685	1.967	-.0082	1.9309	-.0045	18	1 7/8	19/32	3/4	1/8	5/16	2 11/16	1/2	.058	2
11	N11	W11	55	2.1654	2.157	-.0082	2.1209	-.0051	18	2 1/16	19/32	3/4	1/8	5/16	2 31/32	1/2	.063	2 3/16
12	N12	W12	60	2.3622	2.360	-.0082	2.3239	-.0051	18	2 1/4	5/8	25/32	1/8	5/16	3 5/32	17/32	.063	2 13/32
13	N13	W13	65	2.5591	2.548	-.0082	2.5119	-.0051	18	2 7/16	21/32	13/16	1/8	5/16	3 3/8	9/16	.063	2 19/32
14	N14	W14	70	2.7559	2.751	-.0082	2.7149	-.0051	18	2 5/8	21/32	29/32	1/8	5/16	3 5/8	9/16	.063	2 13/16
15	AN15A	W15	75	2.9528	2.933	-.0112	2.8789	-.0054	12	2 25/32	11/16	15/16	5/32	5/16	3 7/8	19/32	.072	3
16	AN16A	W16	80	3.1496	3.137	-.0112	3.0829	-.0059	12	3	11/16	15/16	5/32	3/8	4 5/32	19/32	.072	3 3/16
17	AN17A	W17	85	3.3465	3.340	-.0112	3.2859	-.0074	12	3 3/16	23/32	31/32	5/32	3/8	4 13/32	5/8	.072	3 13/32
18	AN18A	W18	90	3.5433	3.527	-.0112	3.4729	-.0074	12	3 3/8	13/16	1 1/16	5/32	3/8	4 21/32	11/16	.094	3 19/32
19	AN19A	W19	95	3.7402	3.730	-.0112	3.6759	-.0074	12	3 9/16	27/32	1 3/32	5/32	3/8	4 15/16	23/32	.094	3 13/16
20	AN20A	W20	100	3.9370	3.918	-.0112	3.8639	-.0074	12	3 25/32	7/8	1 3/16	5/32	3/8	5 3/16	3/4	.094	4
21	AN21A	W21	105	4.1339	4.122	-.0112	4.0679	-.0083	12	3 15/16	7/8	1 3/16	5/32	3/8	5 7/16	3/4	.094	4 7/32
22	AN22A	W22	110	4.3307	4.325	-.0112	4.2709	-.0083	12	4 3/16	29/32	1 7/32	5/32	3/8	5 23/32	25/32	.125	4 13/32
24	AN24A	W24	120	4.7244	4.716	-.0112	4.6619	-.0083	12	4 9/16	15/16	1 1/4	5/32	3/8	6 1/8	13/16	.125	4 13/16
26	AN26A	W26	130	5.1181	5.106	-.0112	5.0519	-.0083	12	4 15/16	1	1 5/16	5/32	1/2	6 3/4	7/8	.125	5 7/32
28	AN28A	W28	140	5.5118	5.497	-.0112	5.4429	-.0083	12	5 5/16	1 1/16	1 3/8	5/32	5/8	7 3/32	15/16	.125	5 19/32
30	AN30A	W30	150	5.9055	5.888	-.0112	5.8339	-.0083	12	5 23/32	1 1/8	1 1/2	5/32	5/8	7 11/16	31/32	.156	6
32	AN32A	W32	160	6.2992	6.284	-.0152	6.2028	-.0091	8	6 1/8	1 3/16	1 9/16	1/4	5/8	8 1/16	1 1/32	.156	6 13/32
34	AN34A	W34	170	6.6929	6.659	-.0152	6.5778	-.0091	8	6 1/2	1 7/32	1 19/32	1/4	3/4	8 21/32	1 1/16	.156	6 25/32
36	AN36A	W36	180	7.0866	7.066	-.0152	6.9848	-.0091	8	6 29/32	1 1/4	1 5/8	1/4	3/4	9 1/16	1 3/32	.156	7 3/16
38	AN38A	W38	190	7.4803	7.472	-.0152	7.3908	-.0091	8	7 5/16	1 9/32	1 21/32	1/4	3/4	9 15/32	1 1/8	.156	7 19/32
40	AN40A	W40	200	7.8740	7.847	-.0152	7.7658	-.0114	8	7 11/16	1 11/32	1 23/32	1/4	7/8	9 27/32	1 3/16	.156	8
44	N44	W44	220	8.6614	8.628	-.0152	8.5468	-.0121	8	8 5/16	1 3/8	1 9/16	1/4	1 1/16	11	1 1/4	.156	8 45/64
22	N022	W022	110	4.3307	4.325	-.0112	4.2709	-.0083	12	4 3/16	29/32	1 7/32	5/32	3/8	5 5/16	25/32	.125	4 13/32
24	N024	W024	120	4.7244	4.716	-.0112	4.6619	-.0083	12	4 9/16	15/16	1 1/4	5/32	3/8	5 11/16	13/16	.125	4 13/16
26	N026	W026	130	5.1181	5.106	-.0112	5.0519	-.0083	12	4 15/16	1	1 5/16	5/32	1/2	6 1/8	7/8	.125	5 7/32
28	N028	W028	140	5.5118	5.497	-.0112	5.4429	-.0083	12	5 5/16	1 1/16	1 3/8	5/32	5/8	6 1/2	15/16	.125	5 19/32
30	N030	W030	150	5.9055	5.888	-.0112	5.8339	-.0083	12	5 23/32	1 1/8	1 1/2	5/32	5/8	7 1/8	31/32	.125	6
32	N032	W032	160	6.2992	6.284	-.0152	6.2028	-.0091	8	6 1/8	1 3/16	1 9/16	1/4	5/8	7 1/2	1 1/32	.125	6 13/32
34	N034	W034	170	6.6929	6.659	-.0152	6.5778	-.0091	8	6 1/2	1 7/32	1 19/32	1/4	3/4	7 7/8	1 1/16	.125	6 25/32
36	N036	W036	180	7.0866	7.066	-.0152	6.9848	-.0091	8	6 29/32	1 1/4	1 5/8	1/4	3/4	8 1/4	1 3/32	.125	7 3/16
38	N038	W038	190	7.4803	7.472	-.0152	7.3908	-.0091	8	7 5/16	1 9/32	1 21/32	1/4	3/4	8 11/16	1 1/8	.125	7 19/32
40	N040	W040	200	7.8740	7.847	-.0152	7.7658	-.0114	8	7 11/16	1 11/32	1 23/32	1/4	7/8	9 7/16	1 3/16	.125	8
44	N044	W044	220	8.6614	8.628	-.0152	8.5468	-.0121	8	8 5/16	1 3/8	1 9/16	1/4	1 1/16	10 1/4	1 1/4	.125	8 45/64

Threads are derived from the Screw Thread Standards for Federal services Handbook H-28.
Tolerance: + 1/64 to -0 inch

LOCKNUTS AND LOCKWASHERS

For Bearing with Bore Number	Locknut Number	Lockwasher Number	Thread Size d	Threads per mm	Dimensions (mm) d_1	d_2	g	b	h	B	Shaft Diameter (mm)
—	AN00	AW00	M10 X 75	.75	13	18	14	3	2	4	10
—	AN01	AW01	M12 X 1	1.0	17	22	18	3	2	4	12
—	AN02	AW02	M15 X 1	1.0	21	25	21	4	2	5	15
—	AN03	AW03	M17 X 1	1.0	24	28	24	4	2	5	17
04	AN04	AW04	M20 X 1	1.0	26	32	28	4	2	6	20
05	AN05	AW05	M25 X 1.5	1.5	32	38	34	5	2	7	25
06	AN06	AW06	M30 X 1.5	1.5	38	45	41	5	2	7	30
07	AN07	AW07	M35 X 1.5	1.5	44	52	48	5	2	8	35
08	AN08	AW08	M40 X 1.5	1.5	50	58	53	6	2.5	9	40
09	AN09	AW09	M45 X 1.5	1.5	56	65	60	6	2.5	10	45
10	AN10	AW10	M50 X 1.5	1.5	61	70	65	6	2.5	11	50
11	AN11	AW11	M55 X 2	2.0	67	75	69	7	3	11	55
12	AN12	AW12	M60 X 2	2.0	73	80	74	7	3	11	60
13	AN13	AW13	M65 X 2	2.0	79	85	79	7	3	12	65
14	AN14	AW14	M70 X 2	2.0	85	92	85	8	3.5	12	70
15	AN15	AW15	M75 X 2	2.0	90	98	91	8	3.5	13	75
16	AN16	AW16	M80 X 2	2.0	95	105	98	8	3.5	15	80
17	AN17	AW17	M85 X 2	2.0	102	110	103	8	3.5	16	85
18	AN18	AW18	M90 X 2	2.0	108	120	112	10	4	16	90
19	AN19	AW19	M95 X 2	2.0	113	125	117	10	4	17	95
20	AN20	AW20	M100 X 2	2.0	120	130	122	10	4	18	100
21	AN21	AW21	M105 X 2	2.0	126	140	130	12	5	18	105
22	AN22	AW22	M110 X 2	2.0	133	145	135	12	5	19	110
—	AN23	AW23	M115 X 2	2.0	137	150	140	12	5	19	115
24	AN24	AW24	M120 X 2	2.0	138	155	145	12	5	20	120
—	AN25	AW25	M125 X 2	2.0	148	160	150	12	5	21	125
26	AN26	AW26	M130 X 2	2.0	149	165	155	12	5	21	130
—	AN27	AW27	M135 X 2	2.0	160	175	163	14	6	22	135
28	AN28	AW28	M140 X 2	2.0	160	180	168	14	6	22	140
—	AN29	AW29	M145 X 2	2.0	171	190	178	14	6	24	145
30	AN30	AW30	M150 X 2	2.0	171	195	183	14	6	24	150
—	AN31	AW31	M155 X 3	3.0	182	200	186	16	7	25	155
32	AN32	AW32	M160 X 3	3.0	182	210	196	16	7	25	160
—	AN33	AW33	M165 X 3	3.0	193	210	196	16	7	26	165
34	AN34	AW34	M170 X 3	3.0	193	220	206	16	7	26	170
36	AN36	AW36	M180 X 3	3.0	203	230	214	18	8	27	180
38	AN38	AW38	M190 X 3	3.0	214	240	224	18	8	28	190
40	AN40	AW40	M200 X 3	3.0	226	250	234	18	8	29	200
44	AN44	AL44	Tr220 X 4	4.0	250	280	260	20	10	32	220
48	AN48	AL44	Tr240 X 4	4.0	270	300	280	20	10	34	240
52	AN52	AL52	Tr260 X 4	4.0	300	330	306	24	12	36	260
56	AN56	AL52	Tr280 X 4	4.0	320	350	326	24	12	38	280
60	AN60	AL60	Tr300 X 4	4.0	340	380	356	24	12	40	300
64	AN64	AL64	Tr320 X 5	5.0	360	400	376	24	12	42	320
68	AN68	AL68	Tr340 X 5	5.0	400	440	410	28	15	55	340
72	AN72	AL68	Tr360 X 5	5.0	420	460	430	28	15	58	360
76	AN76	AL76	Tr380 X 5	5.0	450	490	454	32	18	60	380
80	AN80	AL80	Tr400 X 5	5.0	470	520	484	32	18	62	400
84	AN84	AL80	Tr420 X 5	5.0	490	540	504	32	18	70	420
88	AN88	AL88	Tr440 X 5	5.0	510	560	520	36	20	70	440
92	AN92	AL88	Tr460 X 5	5.0	540	580	540	36	20	75	460
96	AN96	AL96	Tr480 X 5	5.0	560	620	580	36	20	75	480
/500	AN100	AL100	Tr500 X 5	5.0	580	630	584	40	23	80	800

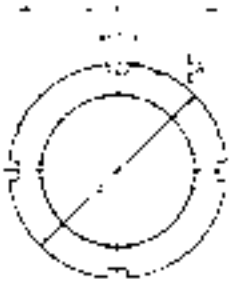

NTN

LOCKNUTS AND LOCKWASHERS

WEIGHTS

LOCKNUTS AND LOCKWASHERS

— INCH SIZES —				— METRIC SIZES —			
Locknut Number	Weight (lbs)	Lockwasher Number	Weight (oz)	Locknut Number	Weight (lbs)	Lockwasher Number	Weight (oz)
N05	.12	W05	.16	AN00	.01	AW00	.05
N06	.14	W06	.18	AN01	.02	AW01	.07
N07	.22	W07	.26	AN02	.02	AW02	.09
N08	.24	W08	.39	AN03	.03	AW03	.11
N09	.31	W09	.48	AN04	.04	AW04	.12
N10	.36	W10	.49	AN05	.06	AW05	.23
N11	.44	W11	.59	AN06	.09	AW06	.28
N12	.49	W12	.61	AN07	.12	AW07	.37
N13	.59	W13	.71	AN08	.19	AW08	.43
N14	.67	W14	.81	AN09	.26	AW09	.54
AN15A	.83	W15	1.19	AN10	.33	AW10	.56
AN16A	.96	W16	1.37	AN11	.35	AW11	.69
AN17A	1.10	W17	1.42	AN12	.38	AW12	.89
AN18A	1.37	W18	2.21	AN13	.45	AW13	1.02
AN19A	1.63	W19	2.47	AN14	.53	AW14	1.18
AN20A	1.89	W20	2.76	AN15	.63	AW15	1.26
AN21A	1.99	W21	2.94	AN16	.88	AW16	1.64
AN22A	2.33	W22	4.60	AN17	.99	AW17	1.85
AN24A	2.55	W24	4.90	AN18	1.23	AW18	2.20
AN26A	3.53	W26	6.21	AN19	1.45	AW19	2.36
AN28A	3.92	W28	6.40	AN20	1.54	AW20	2.70
AN30A	4.89	W30	9.71	AN21	1.86	AW21	2.91
AN32A	5.55	W32	9.92	AN22	2.13	AW22	3.32
AN34A	6.93	W34	12.22	AN23	2.23	AW23	3.81
AN36A	7.35	W36	12.87	AN24	2.38	AW24	3.70
AN38A	7.99	W38	13.46	AN25	2.62	AW25	4.16
AN40A	8.86	W40	13.88	AN26	2.76	AW26	3.99
N44	11.85	W44	19.41	AN27	3.42	AW27	5.08
N022	1.62	W022	3.39	AN28	3.44	AW28	5.01
N024	1.82	W024	3.75	AN29	4.41	AW29	5.93
N026	2.21	W026	4.02	AN30	4.48	AW30	5.82
N028	2.50	W028	4.39	AN31	4.87	AW31	7.37
N030	3.42	W030	6.21	AN32	5.71	AW32	7.83
N032	3.89	W032	6.53	AN33	5.36	AW33	8.50
N034	4.25	W034	6.98	AN34	6.17	AW34	8.71
N036	4.50	W036	7.16	AN36	6.77	AW36	9.45
N038	5.02	W038	7.41	AN38	7.47	AW38	9.81
N040	7.10	W040	9.01	AN40	8.14	AW40	10.34
N044	8.20	W044	9.58	AN44	11.47	AL44	.92
				AN48	13.12	AL44	.92
				AN52	17.75	AL52	1.20
				AN56	19.96	AL52	1.20
				AN60	26.02	AL60	1.34
				AN64	28.89	AL64	1.89
				AN68	50.94	AL68	2.35
				AN72	55.35	AL68	2.35
				AN76	68.13	AL76	2.81
				AN80	81.36	AL80	2.89
				AN84	95.92	AL80	2.89
				AN88	99.89	AL88	3.17
				AN92	111.13	AL88	3.17
				AN96	137.15	AL96	3.67
				AN100	139.58	AL100	3.70

BALL AND ROLLER THRUST BEARING NUMBERING SYSTEM

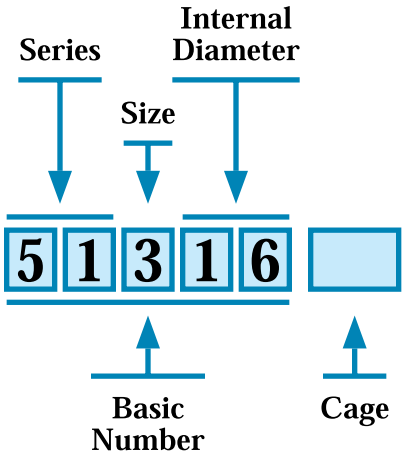

1. SERIES & SIZE

51, 53*:	Single direction thrust ball bearing
52, 54*:	Double direction thrust ball bearing
56:	Angular contact thrust ball bearing
29:	Spherical thrust roller bearing
29:	Single direction thrust ball bearing
9:	Single direction thrust ball bearing

* Self-aligning outside diameter

2. CAGE

No Symbol:	Standard cage
J:	Pressed steel cage
L1:	Machined brass cage
T2:	Plastic cage, nylon or teflon

SERIES 511

Units: **INCHES**
Millimeters

SINGLE DIRECTION THRUST BALL BEARINGS

Bearing No.	d	d_e	D_i	D	H	r	Basic Load Ratings (lbs) Dynamic C	Static C_o	Weight (lbs)
51100	**.3937**	**.433**	**.945**	**.9449**	**.3543**	**.012**	**2,250**	**3,150**	**.046**
	10	11	24	24	9	0.3			
51101	**.4724**	**.512**	**1.024**	**1.0236**	**.3543**	**.012**	**2,320**	**3,450**	**.051**
	12	13	26	26	9	0.3			
51102	**.5906**	**.630**	**1.102**	**1.1024**	**.3543**	**.012**	**2,370**	**3,750**	**.053**
	15	16	28	28	9	0.3			
51103	**.6693**	**.709**	**1.181**	**1.1811**	**.3543**	**.012**	**2,430**	**4,100**	**.057**
	17	18	30	30	9	0.3			
51104	**.7874**	**.827**	**1.378**	**1.3780**	**.3937**	**.012**	**3,200**	**5,550**	**.088**
	20	21	35	35	10	0.3			
51105	**.9843**	**1.024**	**1.654**	**1.6535**	**.4331**	**.024**	**4,400**	**8,350**	**.132**
	25	26	42	42	11	0.6			
51106	**1.1811**	**1.260**	**1.850**	**1.8504**	**.4331**	**.024**	**4,600**	**9,500**	**.152**
	30	32	47	47	11	0.6			
51107	**1.3780**	**1.457**	**2.047**	**2.0472**	**.4724**	**.024**	**4,600**	**10,000**	**.187**
	35	37	52	52	12	0.6			
51108	**1.5748**	**1.654**	**2.362**	**2.3622**	**.5118**	**.024**	**6,050**	**14,100**	**.276**
	40	42	60	60	13	0.6			
51109	**1.7717**	**1.850**	**2.559**	**2.5591**	**.5512**	**.024**	**6,250**	**15,500**	**.326**
	45	47	65	65	14	0.6			
51110	**1.9685**	**2.047**	**2.756**	**2.7559**	**.5512**	**.024**	**6,450**	**17,000**	**.355**
	50	52	70	70	14	0.6			
51111	**2.1654**	**2.244**	**3.071**	**3.0709**	**.6299**	**.024**	**7,800**	**20,900**	**.498**
	55	57	78	78	16	0.6			
51112	**2.3622**	**2.441**	**3.346**	**3.3465**	**.6693**	**.039**	**9,300**	**25,300**	**.653**
	60	62	85	85	17	1.0			
51113	**2.5591**	**2.638**	**3.543**	**3.5433**	**.7087**	**.039**	**9,400**	**26,400**	**.745**
	65	67	90	90	18	1.0			
51114	**2.7559**	**2.835**	**3.740**	**3.7402**	**.7087**	**.039**	**9,700**	**28,500**	**.785**
	70	72	95	95	18	1.0			
51115	**2.9528**	**3.031**	**3.937**	**3.9370**	**.7480**	**.039**	**10,000**	**30,500**	**.880**
	75	77	100	100	19	1.0			
51116	**3.1496**	**3.228**	**4.134**	**4.1339**	**.7480**	**.039**	**10,000**	**31,500**	**.930**
	80	82	105	105	19	1.0			
51117	**3.3465**	**3.425**	**4.331**	**4.3307**	**.7480**	**.039**	**10,300**	**34,000**	**.979**
	85	87	110	110	19	1.0			
51118	**3.5433**	**3.622**	**4.724**	**4.7244**	**.8661**	**.039**	**13,400**	**42,500**	**1.51**
	90	92	120	120	22	1.0			
51120	**3.9370**	**4.016**	**5.315**	**5.3150**	**.9843**	**.039**	**19,100**	**60,500**	**2.16**
	100	102	135	135	25	1.0			
51122	**4.3307**	**4.409**	**5.709**	**5.7087**	**.9843**	**.039**	**19,600**	**64,500**	**2.36**
	110	112	145	145	25	1.0			
51124	**4.7244**	**4.803**	**6.102**	**6.1024**	**.9843**	**.039**	**20,000**	**69,000**	**2.45**
	120	122	155	155	25	1.0			
51126	**5.1181**	**5.197**	**6.693**	**6.6929**	**1.1811**	**.039**	**23,300**	**79,000**	**3.81**
	130	132	170	170	30	1.0			
51128X	**5.5113**	**5.591**	**7.008**	**7.0866**	**1.2205**	**.039**	**24,000**	**84,000**	**4.11**
	140	142	178	180	31	1.0			
51130X	**5.9055**	**5.984**	**7.402**	**7.4803**	**1.2205**	**.039**	**24,600**	**90,500**	**4.71**
	150	152	188	190	31	1.0			
51132X	**6.2992**	**6.378**	**7.795**	**7.8740**	**1.2205**	**.039**	**25,100**	**96,000**	**5.04**
	160	162	198	200	31	1.0			
51134X	**6.6929**	**6.772**	**8.386**	**8.4646**	**1.3386**	**.059**	**30,000**	**115,000**	**6.46**
	170	172	213	215	34	1.5			
51136X	**7.0866**	**7.205**	**8.740**	**8.8583**	**1.3386**	**.059**	**30,500**	**119,000**	**6.65**
	180	183	222	225	34	1.5			
51138X	**7.4803**	**7.598**	**9.331**	**9.4488**	**1.4567**	**.059**	**38,500**	**148,000**	**8.64**
	190	193	237	240	37	1.5			
51140X	**7.8740**	**7.992**	**9.724**	**9.8425**	**1.4567**	**.059**	**38,500**	**152,000**	**9.05**
	200	203	247	250	37	1.5			
51144X	**8.6614**	**8.780**	**10.512**	**10.6299**	**1.4567**	**.059**	**40,000**	**166,000**	**9.88**
	220	223	267	270	37	1.5			
51148X	**9.4488**	**9.567**	**11.693**	**11.8110**	**1.7717**	**.079**	**51,000**	**210,000**	**15.8**
	240	243	297	300	45	2.0			
51152X	**10.2362**	**10.354**	**12.480**	**12.5984**	**1.7717**	**.079**	**52,000**	**222,000**	**17.0**
	260	263	317	320	45	2.0			

SINGLE DIRECTION THRUST BALL BEARINGS

Units: **INCHES**
Millimeters

SERIES 512

Bearing No.	d	d_e	D	H	r	Basic Load Ratings (lbs) Dynamic C	Static C_o	Weight (lbs)
51200	**.3937**	**.472**	**1.0236**	**.4331**	**.024**	**2,850**	**3,850**	**.066**
	10	12	26	11	0.6			
51201	**.4724**	**.551**	**1.1024**	**.4331**	**.024**	**2,960**	**4,250**	**.075**
	12	14	28	11	0.6			
51202	**.5906**	**.669**	**1.2598**	**.4724**	**.024**	**3,750**	**5,600**	**.101**
	15	17	32	12	0.6			
51203	**.6693**	**.748**	**1.3780**	**.4724**	**.024**	**3,850**	**6,150**	**.119**
	17	19	35	12	0.6			
51204	**.7874**	**.866**	**1.5748**	**.5512**	**.024**	**5,000**	**8,500**	**.179**
	20	22	40	14	0.6			
51205	**.9843**	**1.063**	**1.8504**	**.5906**	**.024**	**6,250**	**11,300**	**.245**
	25	27	47	15	0.6			
51206	**1.1811**	**1.260**	**2.0472**	**.6299**	**.024**	**6,600**	**13,100**	**.306**
	30	32	52	16	0.6			
51207	**1.3780**	**1.457**	**2.4409**	**.7087**	**.039**	**8,800**	**17,600**	**.474**
	35	37	62	18	1.0			
51208	**1.5748**	**1.654**	**2.6772**	**.7480**	**.039**	**10,600**	**22,100**	**.608**
	40	42	68	19	1.0			
51209	**1.7717**	**1.850**	**2.8740**	**.7874**	**.039**	**10,700**	**23,600**	**.699**
	45	47	73	20	1.0			
51210	**1.9685**	**2.047**	**3.0709**	**.8661**	**.039**	**10,900**	**25,100**	**.833**
	50	52	78	22	1.0			
51211	**2.1654**	**2.244**	**3.5433**	**.9843**	**.039**	**15,600**	**35,500**	**1.34**
	55	57	90	25	1.0			
51212	**2.3622**	**2.441**	**3.7402**	**1.0236**	**.039**	**16,500**	**40,000**	**1.49**
	60	62	95	26	1.0			
51213	**2.5591**	**2.638**	**3.9370**	**1.0630**	**.039**	**16,800**	**42,500**	**1.69**
	65	67	100	27	1.0			
51214	**2.7559**	**2.835**	**4.1339**	**1.0630**	**.039**	**17,100**	**44,500**	**1.75**
	70	72	105	27	1.0			
51215	**2.9528**	**3.031**	**4.3307**	**1.0630**	**.039**	**17,400**	**47,000**	**1.93**
	75	77	110	27	1.0			
51216	**3.1496**	**3.228**	**4.5276**	**1.1024**	**.039**	**17,700**	**49,000**	**2.02**
	80	82	115	28	1.0			
51217	**3.3465**	**3.465**	**4.9213**	**1.2205**	**.039**	**21,400**	**59,500**	**2.76**
	85	88	125	31	1.0			
51218	**3.5433**	**3.661**	**5.3150**	**1.3780**	**.059**	**26,200**	**73,000**	**3.75**
	90	93	135	35	1.5			
51220	**3.9370**	**4.055**	**5.9055**	**1.4961**	**.059**	**33,000**	**92,000**	**5.05**
	100	103	150	38	1.5			
51222	**4.3307**	**4.449**	**6.2992**	**1.4961**	**.059**	**34,500**	**101,000**	**5.42**
	110	113	160	38	1.5			
51224	**4.7244**	**4.843**	**6.6929**	**1.5354**	**.059**	**34,500**	**106,000**	**5.97**
	120	123	170	39	1.5			
51226	**5.1181**	**5.236**	**7.4803**	**1.7717**	**.079**	**43,000**	**127,000**	**9.03**
	130	133	190	45	2.0			
51228	**5.5118**	**5.630**	**7.8740**	**1.8110**	**.079**	**43,500**	**133,000**	**10.2**
	140	143	200	46	2.0			

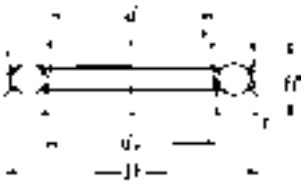

NTN

SERIES 29

Units: **INCHES**
Millimeters

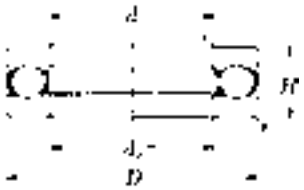

SINGLE DIRECTION THRUST BALL BEARINGS

Bearing No.	d	d_e	D	H	r	Basic Load Ratings (lbs) Dynamic C	Static C_o	Weight (lbs)
2900	**.3937**	**.402**	**1.0236**	**.4724**	**.024**	**2,850**	**3,850**	**.073**
	10	10.2	26	12	0.6			
2901	**.4724**	**.480**	**1.1024**	**.4724**	**.024**	**2,960**	**4,250**	**.082**
	12	12.2	28	12	0.6			
2902	**.5906**	**.598**	**1.2205**	**.4724**	**.024**	**3,200**	**5,150**	**.090**
	15	15.2	31	12	0.6			
2903	**.7087**	**.717**	**1.3780**	**.4724**	**.024**	**3,250**	**5,550**	**.099**
	18	18.2	35	12	0.6			
2904 ½	**.7874**	**.795**	**1.4567**	**.4724**	**.024**	**3,350**	**6,000**	**.121**
	20	20.2	37	12	0.6			
2904	**.8661**	**.874**	**1.6535**	**.5512**	**.024**	**4,250**	**7,800**	**.185**
	22	22.2	42	14	0.6			
2905	**.9843**	**.992**	**1.7717**	**.5512**	**.024**	**4,350**	**8,350**	**.207**
	25	25.2	45	14	0.6			
2906	**1.1811**	**1.189**	**1.9685**	**.5512**	**.024**	**4,550**	**9,500**	**.238**
	30	30.2	50	14	0.6			
2907	**1.3780**	**1.386**	**2.1654**	**.6299**	**.024**	**6,700**	**14,000**	**.304**
	35	35.2	55	16	0.6			
2908	**1.5748**	**1.583**	**2.3622**	**.6299**	**.024**	**7,050**	**15,700**	**.340**
	40	40.2	60	16	0.6			
2909	**1.7717**	**1.780**	**2.6772**	**.6299**	**.024**	**7,250**	**17,400**	**.441**
	45	45.2	68	16	0.6			
2910	**1.9685**	**1.976**	**2.9134**	**.7087**	**.024**	**8,650**	**21,100**	**.567**
	50	50.2	74	18	0.6			
2911	**2.1654**	**2.173**	**3.0709**	**.7087**	**.024**	**9,000**	**23,200**	**.582**
	55	55.2	78	18	0.6			
2912	**2.3622**	**2.370**	**3.2283**	**.7087**	**.024**	**9,100**	**24,300**	**.595**
	60	60.2	82	18	0.6			
2913	**2.5591**	**2.567**	**3.5433**	**.7874**	**.024**	**10,600**	**28,900**	**.820**
	65	65.2	90	20	0.6			
2914	**2.7559**	**2.764**	**3.7402**	**.7874**	**.024**	**11,000**	**31,500**	**.873**
	70	70.2	95	20	0.6			
2915	**2.9528**	**2.961**	**3.9370**	**.7874**	**.024**	**11,400**	**34,000**	**.926**
	75	75.2	100	20	0.6			
2916	**3.1496**	**3.157**	**4.3307**	**.8661**	**.024**	**12,900**	**38,500**	**1.31**
	80	80.2	110	22	0.6			
2917	**3.3465**	**3.354**	**4.5276**	**.8661**	**.024**	**13,300**	**41,500**	**1.40**
	85	85.2	115	22	0.6			
2918	**3.5433**	**3.551**	**4.7244**	**.8661**	**.024**	**13,400**	**42,500**	**1.47**
	90	90.2	120	22	0.6			
2919	**3.7402**	**3.748**	**5.1181**	**.9843**	**.024**	**12,500**	**40,000**	**2.09**
	95	95.2	130	25	0.6			
2920	**3.9370**	**3.945**	**5.3150**	**.9843**	**.024**	**19,100**	**60,500**	**2.17**
	100	100.2	135	25	0.6			
2922	**4.3307**	**4.339**	**5.7087**	**.9843**	**.024**	**19,600**	**64,500**	**2.36**
	110	110.2	145	25	0.6			
2924	**4.7244**	**4.732**	**6.2992**	**1.0630**	**.024**	**22,100**	**75,500**	**3.20**
	120	120.2	160	27	0.6			

SPHERICAL ROLLER THRUST BEARINGS

Units: **INCHES**
Millimeters

SERIES 292 293

Bearing No.	d	D	H	D_1	d_1	h_1	h_2	A	r	Basic Load Ratings (lbs) Dynamic C	Static C_o	Weight (lbs)
29230	5.9055	8.4646	1.5354	8.1890	7.01	.551	.748	3.228	.079	76,500	300,000	9.85
	150	215	39	208	178	14	19.0	82	2.0			
29232	6.2992	8.8583	1.5354	8.6220	7.40	.551	.748	3.386	.079	80,500	325,000	10.4
	160	225	39	219	188	14	19.0	86	2.0			
29234	6.6929	9.4488	1.6535	9.1732	7.80	.591	.787	3.622	.079	95,500	395,000	12.8
	170	240	42	233	198	15	20.0	92	2.0			
29236	7.0866	9.8425	1.6535	9.5669	8.19	.591	.787	3.819	.079	101,000	430,000	13.5
	180	250	42	243	208	15	20.0	97	2.0			
29238	7.4803	10.6299	1.8898	10.3150	8.78	.591	.945	4.094	.098	119,000	500,000	18.8
	190	270	48	262	223	15	24.0	104	2.5			
29240	7.8740	11.0236	1.8898	10.6693	9.29	.591	.945	4.252	.098	120,000	515,000	19.6
	200	280	48	271	236	15	24.0	108	2.5			
29244	8.6614	11.8110	1.8898	11.4961	10.00	.591	.945	4.606	.098	125,000	560,000	22.0
	220	300	48	292	254	15	24.0	117	2.5			
29248	9.4488	13.3858	2.3622	12.9921	11.14	.748	1.181	5.118	.098	185,000	810,000	36.8
	240	340	60	330	283	19	30.0	130	2.5			
29252	10.2362	14.1732	2.3622	13.7795	11.89	.748	1.181	5.472	.098	195,000	885,000	40.8
	260	360	60	350	302	19	30.0	139	2.5			
29256	11.0236	14.9606	2.3622	14.5669	12.72	.748	1.181	5.906	.098	197,000	910,000	43.0
	280	380	60	370	323	19	30.0	150	2.5			
29317	3.3465	5.9055	1.5354	5.6496	4.49	.512	.748	1.969	.079	59,500	185,000	6.33
	85	150	39	143.5	114	13	19.0	50	2.0			
29218	3.5433	6.1024	1.5354	5.8465	4.61	.512	.748	2.047	.079	64,000	206,000	6.75
	90	155	39	148.5	117	13	19.0	52	2.0			
29220	3.9370	6.6929	1.6535	6.4173	5.08	.551	.819	2.283	.079	78,000	260,000	8.62
	100	170	42	163	129	14	20.8	58	2.0			
29322	4.3307	7.4803	1.8898	7.1654	5.63	.630	.906	2.520	.098	99,500	335,000	12.3
	110	190	48	182	143	16	23.0	64	2.5			
29224	4.7244	8.2677	2.1260	7.8740	6.26	.709	1.024	2.756	.098	120,000	400,000	16.9
	120	210	54	200	159	18	26.0	70	2.5			
29226	5.1181	8.8583	2.2835	8.4646	6.73	.748	1.102	2.992	.098	138,000	475,000	20.8
	130	225	58	215	171	19	28.0	76	2.5			
29328	5.5118	9.4488	2.3622	9.0551	7.20	.787	1.142	3.228	.098	154,000	530,000	24.5
	140	240	60	230	183	20	29.0	82	2.5			
29230	5.9055	9.8425	2.3622	9.4488	7.64	.787	1.142	3.425	.098	151,000	535,000	25.6
	150	250	60	240	194	20	29.0	87	2.5			
29232	6.2992	10.6299	2.6378	10.2362	8.19	.906	1.260	3.622	.118	185,000	645,000	34.0
	160	270	67	260	208	23	32.0	92	3.0			
29334	6.6929	11.0236	2.6378	10.6299	8.50	.906	1.260	3.780	.118	192,000	685,000	35.7
	170	280	67	270	216	23	32.0	96	3.0			
29236	7.0866	11.8110	2.8740	11.4173	9.13	.984	1.378	4.055	.118	224,000	805,000	45.6
	180	300	73	290	232	25	35.0	103	3.0			
29238	7.4803	12.5984	3.0709	12.1260	9.69	1.063	1.496	4.331	.157	258,000	955,000	55.3
	190	320	78	308	246	27	38.0	110	4.0			
29340	7.8740	13.3858	3.3465	12.7953	10.28	1.142	1.614	4.567	.157	288,000	1,030,000	68.8
	200	340	85	325	261	29	41.0	116	4.0			
29244	8.6614	14.1732	3.3465	13.5827	11.02	1.142	1.614	4.921	.157	310,000	1,170,000	73.4
	220	360	85	345	280	29	41.0	125	4.0			
29248	9.4488	14.9606	3.3465	14.3701	11.81	1.142	1.614	5.315	.157	310,000	1,180,000	78.3
	240	380	85	365	300	29	41.0	135	4.0			
29352	10.2362	16.5354	3.7402	15.9449	12.95	1.260	1.772	5.827	.197	385,000	1,530,000	115
	260	420	95	405	329	32	45.0	148	5.0			
29256	11.0236	17.3228	3.7402	16.6535	13.70	1.260	1.811	6.220	.197	405,000	1,630,000	120
	280	440	95	423	348	32	46.0	158	5.0			

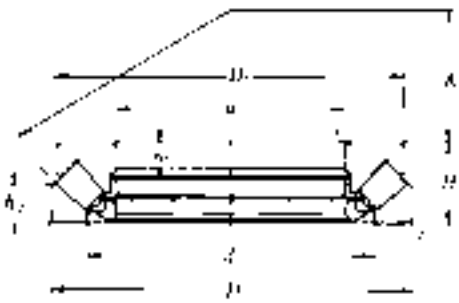

SERIES 294

Units: INCHES
Millimeters

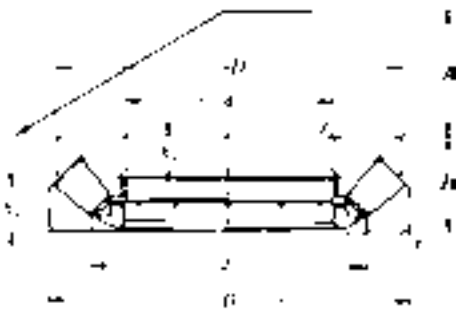

SPHERICAL ROLLER THRUST BEARINGS

Bearing No.	d	D	H	D_1	d_1	h_1	h_2	A	r	Basic Load Ratings (lbs) Dynamic C	Basic Load Ratings (lbs) Static C_o	Weight (lbs)
29412	2.3622 60	5.1181 130	1.6535 42	4.8425 123	3.50 89	.591 15	.787 20	1.496 38	.079 2.0	63,500	181,000	5.75
29413	2.5591 65	5.5118 140	1.7717 45	5.2362 133	3.78 96	.630 16	.827 21	1.654 42	.098 2.5	74,000	212,000	7.36
29414	2.7559 70	5.9055 150	1.8898 48	5.5906 142	4.06 103	.669 17	.906 23	1.732 44	.098 2.5	82,000	234,000	8.95
29415	2.9528 75	6.2992 160	2.0079 51	5.9843 152	4.29 109	.709 18	.945 24	1.850 47	.098 2.5	94,000	268,000	10.5
29416	3.1496 80	6.6929 170	2.1260 54	6.3780 162	4.61 117	.748 19	1.024 26	1.969 50	.098 2.5	103,000	310,000	13.0
29417	3.3465 85	7.0866 180	2.2835 58	6.6929 170	4.92 125	.827 21	1.102 28	2.126 54	.098 2.5	110,000	335,000	15.5
29418	3.5433 90	7.4803 190	2.3622 60	7.0866 180	5.20 132	.866 22	1.142 29	2.205 56	.098 2.5	123,000	380,000	18.0
29420	3.9370 100	8.2677 210	2.6378 67	7.8740 200	5.75 146	.945 24	1.260 32	2.441 62	.118 3.0	154,000	480,000	24.7
29422	4.3307 110	9.0551 230	2.8740 73	8.6614 220	6.38 162	1.024 26	1.378 35	2.717 69	.118 3.0	190,000	590,000	32.4
29424	4.7244 120	9.8425 250	3.0709 78	9.2913 236	6.85 174	1.142 29	1.457 37	2.913 74	.157 4.0	219,000	690,000	40.1
29426	5.1181 130	10.6299 270	3.3465 85	10.0394 255	7.44 189	1.220 31	1.614 41	3.189 81	.157 4.0	242,000	795,000	50.3
29428	5.5118 140	11.0236 280	3.3465 85	10.5512 268	7.83 199	1.220 31	1.614 41	3.386 86	.157 4.0	251,000	845,000	54.2
29430	5.9055 150	11.8110 300	3.5433 90	11.2205 285	8.43 214	1.260 32	1.732 44	3.622 92	.157 4.0	288,000	980,000	65.9
29432	6.2992 160	12.5984 320	3.7402 95	12.0472 306	9.02 229	1.339 34	1.772 45	3.898 99	.197 5.0	335,000	1,160,000	79.8
29434	6.6929 170	13.3858 340	4.0551 103	12.7559 324	9.57 243	1.457 37	1.969 50	4.094 104	.197 5.0	370,000	1,300,000	97.7
29436	7.0866 180	14.1732 360	4.2913 109	13.4646 342	10.04 255	1.535 39	2.047 52	4.331 110	.197 5.0	415,000	1,400,000	116
29438	7.4803 190	14.9606 380	4.5276 115	14.1732 360	10.67 271	1.614 41	2.165 55	4.606 117	.197 5.0	450,000	1,530,000	134
29440	7.8740 200	15.7480 400	4.8031 122	14.9606 380	11.26 286	1.693 43	2.323 59	4.803 122	.197 5.0	500,000	1,720,000	159
29444	8.6614 220	16.5354 420	4.8031 122	15.7480 400	12.13 308	1.693 43	2.283 58	5.197 132	.236 6.0	515,000	1,820,000	165
29448	9.4488 240	17.3228 440	4.8031 122	16.5354 420	12.83 326	1.693 43	2.323 59	5.591 142	.236 6.0	540,000	1,950,000	176
29452	10.2362 260	18.8976 480	5.1969 132	18.1102 460	14.06 357	1.890 48	2.520 64	6.063 154	.236 6.0	615,000	2,250,000	229
29456	11.0236 280	20.4724 520	5.7087 145	19.4882 495	15.24 387	2.047 52	2.677 68	6.535 166	.236 6.0	750,000	2,790,000	295

MOUNTED UNIT NUMBERING SYSTEM

Metric Series

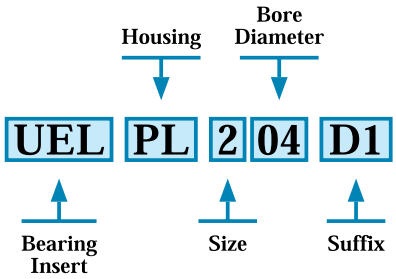

Ultra Class Series

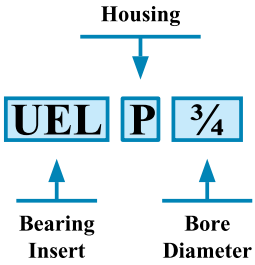

Inch Series

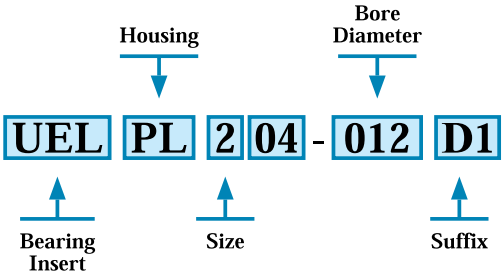

1. PREFIX

F:	Stainless
A:	Lube on non-locking mechanism side

2. BEARING INSERTS*

AEL:	Narrow inner ring, locking collar
AR:	Narrow inner ring, set screw type
AS:	Narrow inner ring, set screw type
JEL:	Narrow inner ring, locking collar
REL:	Wide inner ring, locking collar
UR:	Wide inner ring, set screw type
UC:	Wide inner ring, set screw type, with flinger
UEL:	Wide inner ring, locking collar, with flinger
UK:	Tapered bore, with flinger

3. HOUSINGS

F:	Flanged unit, cast - 4-bolt square housing
FA:	Flanged unit, cast - rhombus housing
FC:	Flanged piloted unit, cast - round housing
FD:	Flanged unit, cast - 2-bolt housing
FH:	Flanged unit, cast housing
FL:	Flanged unit, cast - 2-bolt housing
FS:	Flanged piloted unit, cast - 4-bolt square housing
FU:	Flanged unit, cast - 4-bolt square housing
PF:	Flanged unit, pressed steel - 3-bolt round housing
PFL:	Flanged unit, pressed steel - 2-bolt housing
RPF:	Flanged unit, pressed steel with rubber ring - 3-bolt round housing
HP:	Pillow Block, cast housing, high center height
P:	Pillow Block, cast housing
PL:	Pillow Block, cast housing, low center height
PP:	Pillow Block, pressed steel housing
RPP:	Pillow Block, pressed steel housing with rubber ring
UP:	Pillow Block, cast housing
C:	Cylindrical cartridge unit
HB:	Hanger unit, cast housing
PT:	Mini stretcher
T:	Take-up unit, cast housing

4. SIZE

2:	Light
X:	Medium
3:	Heavy

5. SUFFIX

D1:	Relube type
W3:	Cup Point Set Screw
N:	Snap Ring Groove
NR:	Snap Ring and Groove
R:	Meets ISO Series
HT1D1:	Heat stabilized for up to 284° F
HT2D1:	Heat stabilized for up to 392° F

* To order a bearing with a cylindrical O.D., add S to the part number (example: JELS).

MOUNTED UNIT SELECTION MATRIX

Bearing Insert		Housing	Page	High Base Pillow Block	Page	Low Base Pillow Block	Page	2-Bolt Flange	Page	4-Bolt Square Flange	Page	Pressed Steel Pillow Block	Page	Pressed Steel Flanges	Page
Ultra-Class	Setscrew Type	A-UC2	204	UCP-	135	UCPL-	136	UCFLU-	144	UCFU-	149				
		A-UCX	206	UCPX-	137			UCFLUX-	145	UCFUX-	150				
		A-AR2	208	ARP-	138	ARPL-	139	ARFLU-	146	ARFU-	152				
	Eccentric Locking Collar	A-UEL2	211	UELP-	140	UELPL-	141	UELFLU-	147	UELFU-	151				
		A-JEL2	214	JELP-	142	JELPL-	143	JELFLU-	148	JELFU-	153				
Standard ISO Series	Setscrew Type	UC2	204	UCP2	156	UCPL2-	158	UCFL2	174	UCF2	191				
		UC3	205	UCP3	159			UCFL3	175	UCF3	193				
		UCX	206	UCPX	160			UCFLX	176	UCFX	195				
		AS2	207			ASPL2	162	ASFD2	182			ASPP2	163	ASPF2 ASPFL2	188 185
	Eccentric Locking Collar	UEL2	211	UELP2	164	UELPL2	165	UELFL2 UELFLU2	177 179	UELF2 UELFU2	197 199				
		UEL3	212	UELP3	166			UELFL3	178	UELF3	198				
		AEL2	213	AELP2	168	AELPL2	169	AELFL2 AELFD2	180 183			AELPP2	170	AELPF2 AELPFL2	189 186
		JEL2	214			JELPL2	167	JELFL2 JELFD2	181 184					JELPF2 JELPFL2	190 187
	Adapter Type	UK2	216	UKP2	171					UKF2	200				
Other Bearings				UCS3	210	AELS2	213	ASS2	207	UCS2	209	REL2	215	Farm Implement Bearings	222

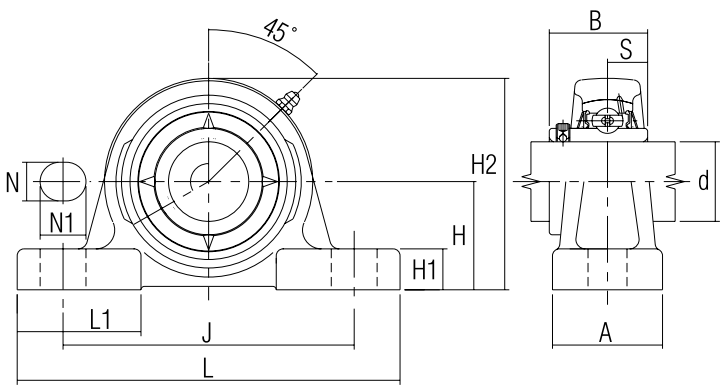

Units: Millimeters
INCHES

NTN

SERIES UCP

SET SCREW TYPE

PILLOW BLOCKS - ULTRA CLASS

Part Number	Nominal Dimensions d	H	L	J	A	N	N1	H1	H2	L1	B	S	Bolt Size	Lube Hole of Housing	Insert Bearing Number	Housing Number
UCP-1/2	0.5000	30.2	127	92.1	38	11.1	22.2	14	62	42	27.4	11.5	3/8	1/4-28UNF	A-UC201X-008D1	P201D1V50
UCP-9/16	0.5625	1 3/16	5	3 5/8	1 1/2	7/16	7/8	9/16	2 7/16	1 21/32	1.0787	0.453			A-UC202X-009D1	
UCP-5/8	0.6250														A-UC202X-010D1	
UCP-11/16	0.6875														A-UC203X-011D1	
UCP-3/4	0.7500	33.3	127	96	38	11.1	19.8	14	65	42	31	12.7	3/8	1/4-28UNF	A-UC204-012D1	P204D1V50
		1 5/16	5	3 25/32	1 1/2	7/16	25/32	9/16	2 9/16	1 21/32	1.2205	0.500				
UCP-13/16	0.8125	36.5	140	104.8	38	11.1	20.6	15	71	42	34.1	14.3	3/8	1/8-27NPT	A-UC205-013D1	P205D1V50
UCP-7/8	0.8750	1 7/16	5 1/2	4 1/8	1 1/2	7/16	13/16	19/32	2 25/32	1 21/32	1.3425	0.563			A-UC205-014D1	
UCP-15/16	0.9375														A-UC205-015D1	
UCP-1	1.0000														A-UC205-100D1	
UCP-1 1/16	1.0625	42.9	165	117.5	48	14.3	23.8	17	83	54	38.1	15.9	1/2	1/8-27NPT	A-UC206-101D1	P206D1V50
UCP-1 1/8	1.1250	1 11/16	6 1/2	4 5/8	1 7/8	9/16	15/16	21/32	3 9/32	2 1/8	1.5000	0.626			A-UC206-102D1	
UCP-1 3/16	1.1875														A-UC206-103D1	
UCP-1 1/4S	1.2500														A-UC206-104D1	
UCP-1 1/4	1.2500	47.6	167	130.2	48	14.3	24.6	18	93	54	42.9	17.5	1/2	1/8-27NPT	A-UC207-104D1	P207D1V50
UCP-1 5/16	1.3125	1 7/8	6 9/16	5 1/8	1 7/8	9/16	31/32	23/32	3 21/32	2 1/8	1.6890	0.689			A-UC207-105D1	
UCP-1 3/8	1.3750														A-UC207-106D1	
UCP-1 7/16	1.4375														A-UC207-107D1	
UCP-1 1/2	1.5000	49.2	184	136.5	54	14.3	26.2	18	98	52	49.2	19	1/2	1/8-27NPT	A-UC208-108D1	P208D1V50
UCP-1 9/16	1.5625	1 15/16	7 1/4	5 3/8	2 1/8	9/16	1 1/32	23/32	3 27/32	2 1/16	1.9370	0.748			A-UC208-109D1	
UCP-1 5/8	1.6250	54	190	149.2	54	14.3	28.6	20	106	60	49.2	19	1/2	1/8-27NPT	A-UC209-110D1	P209D1V50
UCP-1 11/16	1.6875	2 1/8	7 15/32	5 7/8	2 1/8	9/16	1 1/8	25/32	4 3/16	2 3/8	1.9370	0.748			A-UC209-111D1	
UCP-1 3/4	1.7500														A-UC209-112D1	
UCP-1 13/16	1.8125	57.2	206	158	60	17.5	23.8	21	114	65	51.6	19	5/8	1/8-27NPT	A-UC210-113D1	P210D1V50
UCP-1 7/8	1.8750	2 1/4	8 1/8	6 7/32	2 3/8	11/16	15/16	13/16	4 1/2	2 9/16	2.0315	0.748			A-UC210-114D1	
UCP-1 15/16	1.9375														A-UC210-115D1	
UCP-2S	2.0000														A-UC210-200D1	
UCP-2	2.0000	63.5	219	176.2	60	18.3	29.4	23	126	65	55.6	22.2	5/8	1/8-27NPT	A-UC211-200D1	P211D1V50
UCP-2 1/16	2.0625	2 1/2	8 5/8	6 15/16	2 3/8	23/32	1 5/32	29/32	4 31/32	2 9/16	2.1890	0.874			A-UC211-201D1	
UCP-2 1/8	2.1250														A-UC211-202D1	
UCP-2 3/16	2.1875														A-UC211-203D1	
UCP-2 1/4	2.2500	69.8	241	188.1	70	18.3	29.4	25	138	70	65.1	25.4	5/8	1/8-27NPT	A-UC212-204D1	P212D1V50
UCP-2 5/16	2.3125	2 3/4	9 1/2	7 13/32	2 3/4	23/32	1 5/32	31/32	5 7/16	2 3/4	2.5630	1.000			A-UC212-205D1	
UCP-2 3/8	2.3750														A-UC212-206D1	
UCP-2 7/16	2.4375														A-UC212-207D1	
UCP-2 1/2	2.5	76.2	265	203	70	25	28	27	151	77	65.1	25.4	3/4	1/8-27NPT	A-UC213-208D1	P213D1V50
UCP-2 9/16	2.5625	3	10 7/16	8	2 3/4	31/32	1 3/32	1 1/16	5 15/16	3 1/32	2.563	1			A-UC213-209D1	
UCP-2 5/8 R	2.625	79.4	266	210	72	25	28	27	157	77	74.6	30.2	3/4	1/8-27NPT	A-UC214-210D1	P214D1V50
UCP-2 11/16 R	2.6875	3 1/8	10 15/32	8 9/32	2 27/32	31/32	1 3/32	1 1/16	6 3/16	3 1/32	2.937	1.189			A-UC214-211D1	
UCP-2 3/4 R	2.75														A-UC214-213D1	
UCP-2 13/16	2.8125	82.6	275	215.9	74	22.2	31.8	28	163	80	77.8	33.3	3/4	1/8-27NPT	A-UC215-213D1	P215D1V50
UCP-2 7/8	2.8750	3 1/4	10 13/16	8 1/2	2 29/32	7/8	1 1/4	1 3/32	6 13/32	3 5/32	3.0630	1.311			A-UC215-214D1	
UCP-2 15/16	2.9375														A-UC215-215D1	
UCP-3	3.0000														A-UC215-300D1	

Note: Metric Sizes available. The production and shipment of black oxide coated inserts will be introduced as a rolling change. This is denoted with an M at the end of the current part number. Please consult NTN for availability.

SERIES UCPL

SET SCREW TYPE

Units: Millimeters
INCHES

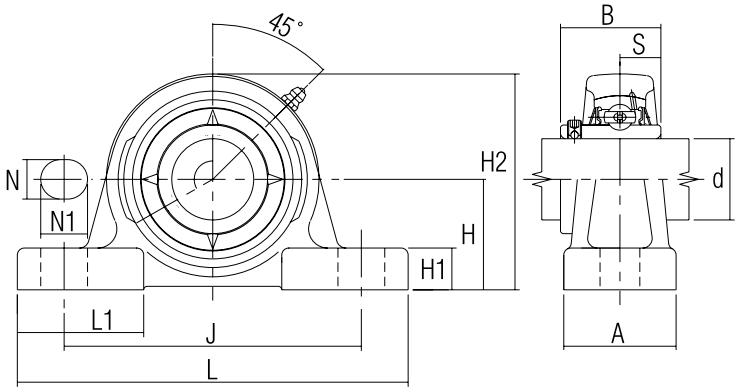

PILLOW BLOCKS - ULTRA CLASS

Part Number	Nominal Dimensions d	H	L	J	A	N	N1	H1	H2	L1	B	S	Bolt Size	Lube Hole of Housing	Insert Bearing Number	Housing Number
UCPL-½	0.5000	27	121	92.1	34.9	11.1	22.2	13	54	40	27.4	11.5	⅜	¼-28UNF	A-UC201X-008D1	PL201D1V50
UCPL-9⁄16	0.5625	1 1⁄16	4 ¾	3 5⁄8	1 ⅜	7⁄16	⅞	½	2 ⅛	1 9⁄16	1.0787	0.453			A-UC202X-009D1	
UCPL-⅝	0.6250														A-UC202X010D1	
UCPL-11⁄16	0.6875														A-UC203X-011D1	
UCPL-¾	0.7500	31.75	127	96	38.1	11.1	19.8	14	64	42	31	12.7	⅜	¼-28UNF	A-UC204-012D1	PL204D1V50
		1 ¼	5	3 25⁄32	1 ½	7⁄16	25⁄32	9⁄16	2 17⁄32	1 21⁄32	1.2205	0.500				
UCPL-13⁄16	0.8125	33.3	140	104.8	38.1	11.1	20.6	15	68	42	34.1	14.3	⅜	⅛-27NPT	A-UC205-013D1	PL205D1V50
UCPL-⅞	0.8750	1 5⁄16	5 ½	4 ⅛	1 ½	7⁄16	13⁄16	19⁄32	2 11⁄16	1 21⁄32	1.3425	0.563			A-UC205-014D1	
UCPL-15⁄16	0.9375														A-UC205-015D1	
UCPL-1	1.0000														A-UC205-100D1	
UCPL-1 1⁄16	1.0625	39.7	165	117.5	47.6	14.3	23.8	17	80	54	38.1	15.9	½	⅛-27NPT	A-UC206-101D1	PL206D1V50
UCPL-1 ⅛	1.1250	1 9⁄16	6 ½	4 5⁄8	1 ⅞	9⁄16	15⁄16	21⁄32	3 5⁄32	2 ⅛	1.5000	0.626			A-UC206-102D1	
UCPL-1 3⁄16	1.1875														A-UC206-103D1	
UCPL-1 ¼S	1.2500														A-UC206-104D1	
UCPL-1 ¼	1.2500	46	167	130.2	47.6	14.3	24.6	18	91	54	42.9	17.5	½	⅛-27NPT	A-UC207-104D1	PL207D1V50
UCPL-1 5⁄16	1.3125	1 13⁄16	6 9⁄16	5 ⅛	1 ⅞	9⁄16	31⁄32	23⁄32	3 19⁄32	2 ⅛	1.6890	0.689			A-UC207-105D1	
UCPL-1 ⅜	1.3750														A-UC207-106D1	
UCPL-1 7⁄16	1.4375														A-UC207-107D1	
UCPL-1 ½	1.5000	49.2	184	136.5	54	14.3	26.2	18	98	52	49.2	19	½	⅛-27NPT	A-UC208-108D1	P208D1V50
UCPL-1 9⁄16	1.5625	1 15⁄16	7 ¼	5 ⅜	2 ⅛	9⁄16	1 1⁄32	23⁄32	3 27⁄32	2 1⁄16	1.9370	0.748			A-UC208-109D1	
UCPL-1 ⅝	1.6250	54	190	149.2	54	14.3	28.6	20	104	60	49.2	19	½	⅛-27NPT	A-UC209-110D1	PL209D1V50
UCPL-1 11⁄16	1.6875	2 ⅛	7 15⁄32	5 ⅞	2 ⅛	9⁄16	1 ⅛	25⁄32	4 3⁄32	2 ⅜	1.9370	0.748			A-UC209-111D1	
UCPL-1 ¾	1.7500														A-UC209-112D1	
UCPL-1 13⁄16	1.8125	55.6	206	158	60.3	17.5	23.8	21	112	65	51.6	19	⅝	⅛-27NPT	A-UC210-113D1	PL210D1V50
UCPL-1 ⅞	1.8750	2 3⁄16	8 ⅛	6 7⁄32	2 ⅜	11⁄16	15⁄16	13⁄16	4 13⁄32	2 9⁄16	2.0315	0.748			A-UC210-114D1	
UCPL-1 15⁄16	1.9375														A-UC210-115D1	
UCPL-2S	2.0000														A-UC210-200D1	
UCPL-2	2.0000	61.9	219	176.2	60	18.3	29.4	23	124	65	55.6	22.2	⅝	⅛-27NPT	A-UC211-200D1	PL211D1V50
UCPL-2 1⁄16	2.0625	2 7⁄16	8 ⅝	6 15⁄16	2 ⅜	23⁄32	1 5⁄32	29⁄32	4 ⅞	2 9⁄16	2.1890	0.874			A-UC211-201D1	
UCPL-2 ⅛	2.1250														A-UC211-202D1	
UCPL-2 3⁄16	2.1875														A-UC211-203D1	
UCPL-2 ¼	2.2500	68.3	241	188.1	69.9	17.5	29.4	25	136	70	65.1	25.4	⅝	⅛-27NPT	A-UC212-204D1	PL212D1V50
UCPL-2 5⁄16	2.3125	2 11⁄16	9 ½	7 13⁄32	2 ¾	11⁄16	1 5⁄32	31⁄32	5 11⁄32	2 ¾	2.5630	1.000			A-UC212-205D1	
UCPL-2 ⅜	2.3750														A-UC212-206D1	
UCPL-2 7⁄16	2.4375														A-UC212-207D1	
UCPL-2 ½	2.5000	76.2	265	203.2	70	25	28	27	151	77	65.1	25.4	3/4	1 /8-27NPT	A-UC213-208D1	PL213D1V50
UCPL-2 9⁄16	2.5625	3	10 7⁄16	8	2 ¾	31⁄32	1 3⁄32	1 1⁄16	5 15⁄16	3 1⁄32	2.563	1			A-UC213-209D1	
UCPL-2 ⅝	2.6250	76.2	266	203.2	72.2	20.6	34.9	27	154	77	74.6	30.2	¾	⅛-27NPT	A-UC214-210D1	PL214D1V50
UCPL-2 11⁄16	2.6875	3	10 15⁄32	8	2 27⁄32	13⁄16	1 ⅜	1 1⁄16	6 1⁄16	3 1⁄32	2.9370	1.189			A-UC214-211D1	
UCPL-2 ¾	3.7500														A-UC214-212D1	
UCPL-2 13⁄16	2.8125	84.1	305	241.3	73.8	22.2	31.8	28	165	80	77.8	33.3	¾	⅛-27NPT	A-UC215-213D1	PL215D1V50
UCPL-2 ⅞	2.8750	3 5⁄16	12	9 ½	2 29⁄32	⅞	1 ¼	1 3⁄32	6 ½	3 5⁄32	3.0630	1.311			A-UC215-214D1	
UCPL-2 15⁄16	2.9375														A-UC215-215D1	
UCPL-3	3.0000														A-UC215-300D1	

Note: Metric Sizes available. The production and shipment of black oxide coated inserts will be introduced as a rolling change. This is denoted with an M at the end of the current part number. Please consult NTN for availability.

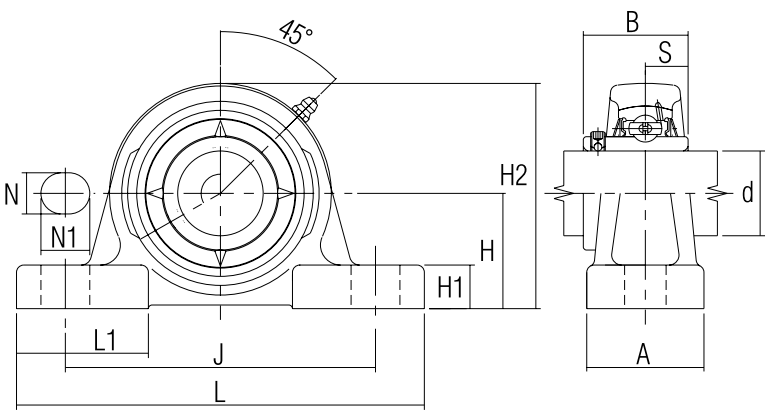

Units: Millimeters
INCHES

SERIES UCPX

SET SCREW TYPE

PILLOW BLOCKS - ULTRA CLASS

Part Number	Nominal Dimensions d	H	L	J	A	N	N1	H1	H2	L1	B	S	Bolt Size	Lube Hole of Housing	Insert Bearing Number	Housing Number
UCPX-13/16	0.8125	42.9	165	117.5	48	14.3	23.8	17	83	54	38.1	15.9	1/2	1/8-27UNF	A-UCX05-013D1	P206D1V50
UCPX-7/8	0.8750	1 11/16	6 1/2	4 5/8	1 7/8	9/16	15/16	21/32	3 9/32	2 1/8	1.5000	0.626			A-UCX05-014D1	
UCPX-15/16	0.9375														A-UCX05-015D1	
UCPX-1	1.0000														A-UCX05-100D1	
UCPX-1 1/16	1.0625	47.6	167	130.2	48	14.3	24.6	18	93	54	42.9	17.5	1/2	1/8-27UNF	A-UCX06-101D1	P207D1V50
UCPX-1 1/8	1.1250	1 7/8	6 9/16	5 1/8	1 7/8	9/16	31/32	23/32	3 21/32	2 1/8	1.6890	0.689			A-UCX06-102D1	
UCPX-1 3/16	1.1875														A-UCX06-103D1	
UCPX-1 1/4	1.2500	54	179	136.5	48	14.3	26.2	23	105	60	49.2	19	1/2	1/8-27UNF	A-UC207-104D1	PX07D1V50
UCPX-1 5/16	1.3125	2 1/8	7 1/16	5 3/8	1 7/8	9/16	1 1/32	29/32	4 1/8	2 3/8	1.9370	0.748			A-UCX07-105D1	
UCPX-1 3/8	1.3750														A-UCX07-106D1	
UCPX-1 7/16	1.4375														A-UCX07-107D1	
UCPX-1 1/2	1.5000	54	190	149.2	54	14.3	28.6	20	106	60	49.2	19	1/2	1/8-27NPT	A-UCX08-108D1	P209D1V50
UCPX-1 9/16	1.5625	2 1/8	7 15/32	5 7/8	2 1/8	9/16	1 1/8	25/32	4 3/16	2 3/8	1.9370	0.748			A-UCX08-109D1	
UCPX-1 5/8	1.6250	57.2	206	158	60	17.5	23.8	21	114	65	51.6	19	5/8	1/8-27NPT	A-UCX09-110D1	P210D1V50
UCPX-1 11/16	1.6875	2 1/4	8 1/8	6 7/32	2 3/8	11/16	15/16	13/16	4 1/2	2 9/16	2.0315	0.748			A-UCX09-111D1	
UCPX-1 3/4	1.7500														A-UCX09-112D1	
UCPX-1 13/16	1.8125	63.5	219	176.2	60	18.3	29.4	23	126	65	55.6	22.2	5/8	1/8-27NPT	A-UC210-113D1	P211D1V50
UCPX-1 7/8	1.8750	2 1/2	8 5/8	6 15/16	2 3/8	23/32	1 5/32	29/32	4 31/32	2 9/16	2.1890	0.874			A-UCX10-114D1	
UCPX-1 15/16	1.9375														A-UCX10-115D1	
UCPX-2	2.0000														A-UC211-200D1	
UCPX-2 1/16	2.0625	69.8	241	188.1	70	18.3	29.4	25	138	70	65.1	25.4	5/8	1/8-27NPT	A-UCX11-201D1	P212D1V50
UCPX-2 1/8	2.1250	2 3/4	9 1/2	7 13/32	2 3/4	23/32	1 5/32	31/32	5 7/16	2 3/4	2.5630	1.000			A-UCX11-202D1	
UCPX-2 3/16	2.1875														A-UCX11-203D1	
UCPX-2 1/4	2.2500														A-UC212-204D1	
UCPX-2 7/16	2.4375	76.2	266	203.2	72	20.6	34.9	27	154	77	74.6	30.2	3/4	1/8-27NPT	A-UC214-207D1	PL214D1V50
UCPX-2 1/2	2.5000	3	10 15/32	8	2 27/32	13/16	1 3/8	1 1/16	6 1/16	3 1/32	2.9370	1.189			A-UCX13-208D1	
UCPX-2 9/16	2.5625														A-UCX13-209D1	
UCPX-2 5/8	2.6250	88.9	330	228.6	89	23.8	50.8	32	178	95	77.8	33.3	3/4	1/8-27NPT	A-UCX14-210D1	PX14D1V50
UCPX-2 11/16	2.6875	3 1/2	13	9	3 1/2	15/16	2	1 1/4	7	3 3/4	3.0630	1.311			A-UCX14-211D1	
UCPX-2 3/4	2.7500														A-UCX14-212D1	
UCPX-2 13/16	2.8125	88.9	330	228.9	89	23.8	50.8	32	178	95	82.6	33.3	3/4	1/8-27NPT	A-UCX15-213D1	PX15D1V50
UCPX-2 7/8	2.8750	3 1/2	13	9	3 1/2	15/16	2	1 1/4	7	3 3/4	3.2520	1.311			A-UCX15-214D1	
UCPX-2 15/16	2.9375														A-UCX15-215D1	
UCPX-3	3.0000														A-UCX15-300D1	
UCPX-3 3/16	2.1875	101.6	356	278.6	111	23.8	50.8	33	203	110	85.7	34.1	3/4	1/8-27NPT	A-UCX16-303D1	PX16D1V50
		4	14	10 31/32	4 3/8	15/16	2	1 5/16	8	4 11/32	3.3740	1.343				
UCPX-3 7/16	3.4375	101.6	356	278.6	111	23.8	50.8	33	203	110	104	42.9	3/4	1/8-27NPT	A-UCX18-307D1	PX18D1V50
UCPX-3 1/2	3.5000	4	14	10 31/32	4 3/8	15/16	2	1 5/16	8	4 11/32	4.0945	1.689			A-UCX18-308D1	

Note: Metric Sizes available. The production and shipment of black oxide coated inserts will be introduced as a rolling change. This is denoted with an M at the end of the current part number. Please consult NTN for availability.

NTN

SERIES ARP

SET SCREW TYPE

Units: Millimeters
INCHES

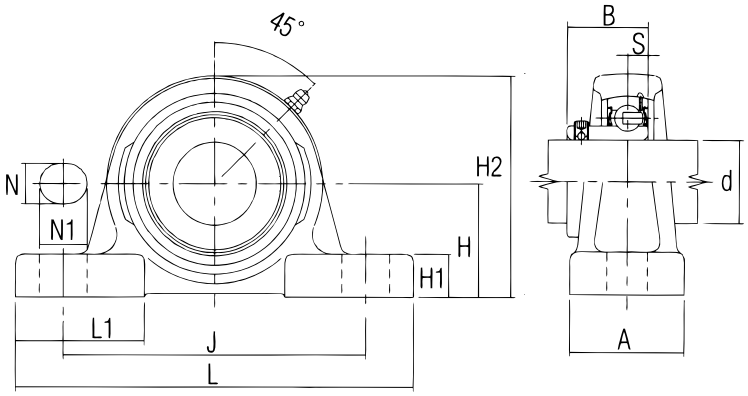

PILLOW BLOCKS - ULTRA CLASS HIGH BASE

Part Number	Nominal Dimensions												Bolt Size	Lube Hole of Housing	Insert Bearing Number	Housing Number
	d	H	L	J	A	N	N1	H1	H2	L1	B	S				
ARP-½	0.5000	1 3/16	127	92.1	38.1	11.1	22.2	14	2 7/16	42	0.8858	0.256	3/8	¼-28UNF	A-AR201-008D1	P201D1V50
ARP-9/16	0.5625		5	3 5/8	1 ½	7/16	7/8	9/16		1 21/32					A-AR202-009D1	
ARP-5/8	0.6250														A-AR202-010D1	
ARP-11/16	0.6875														A-AR203-011D1	
ARP-¾	0.7500	1 5/16	127	96	38.1	11.1	19.8	14	2 9/16	42	1.0039	0.295	3/8	¼-28UNF	A-AR204-012D1	P204D1V50
			5	3 25/32	1 ½	7/16	25/32	9/16		1 21/32						
ARP-13/16	0.8125	1 7/16	140	104.8	38.1	11.1	20.6	15	2 25/32	42	1.0630	0.295	3/8	⅛-27NPT	A-AR205-013D1	P205D1V50
ARP-7/8	0.8750		5 ½	4 ⅛	1 ½	7/16	13/16	19/32		1 21/32					A-AR205-014D1	
ARP-15/16	0.9375														A-AR205-015D1	
ARP-1	1.0000														A-AR205-100D1	
ARP-1 1/16	1.0625	1 11/16	165	117.5	47.6	14.3	23.8	17	3 9/32	54	1.1811	0.354	½	⅛-27NPT	A-AR206-101D1	P206D1V50
ARP-1 ⅛	1.1250		6 ½	4 5/8	1 7/8	9/16	15/16	21/32		2 ⅛					A-AR206-102D1	
ARP-1 3/16	1.1875														A-AR206-103D1	
ARP-1 ¼S	1.2500														A-AR206-104D1	
ARP-1 ¼	1.2500	1 7/8	167	130.2	47.6	14.3	24.6	18	3 21/32	54	1.3780	0.374	½	⅛-27NPT	A-AR207-104D1	P207D1V50
ARP-1 5/16	1.3125		6 9/16	5 ⅛	1 7/8	9/16	31/32	23/32		2 ⅛					A-AR207-105D1	
ARP-1 ⅜	1.3750														A-AR207-106D1	
ARP-1 7/16	1.4375														A-AR207-107D1	
ARP-1 ½	1.5000	49.2	184	136.5	54	14.3	26.2	18	98	52	1.5748	0.433	½	⅛-27NPT	A-AR208-108D1	P208D1V50
ARP-1 9/16	1.5625	1 15/16	7 ¼	5 ⅜	2 ⅛	9/16	1 1/32	23/32	3 27/32	2 1/16					A-AR208-109D1	
ARP-1 5/8	1.6250	2 ⅛	190	149.2	54	14.3	28.6	20	4 3/16	60	1.6339	0.433	½	⅛-27NPT	A-AR209-110D1	P209D1V50
ARP-1 11/16	1.6875		7 15/32	5 7/8	2 ⅛	9/16	1 ⅛	25/32		2 ⅜					A-AR209-111D1	
ARP-1 ¾	1.7500														A-AR209-112D1	
ARP-1 13/16	1.8125	2 ¼	206	158	60.3	17.5	23.8	21	4 ½	65	1.6929	0.433	5/8	⅛-27NPT	A-AR210-113D1	P210D1V50
ARP-1 7/8	1.8750		8 ⅛	6 7/32	2 ⅜	11/16	15/16	13/16		2 9/16					A-AR210-114D1	
ARP-1 15/16	1.9375														A-AR210-115D1	
ARP-2S	2.0000														A-AR210-200D1	
ARP-2	2.0000	2 ½	219	176.2	60	18.3	29.4	23	4 31/32	65	1.6929	0.472	5/8	⅛-27NPT	A-AR211-200D1	P211D1V50
ARP-2 1/16	2.0625		8 5/8	6 15/16	2 ⅜	23/32	1 5/32	29/32		2 9/16					A-AR211-201D1	
ARP-2 ⅛	2.1250														A-AR211-202D1	
ARP-2 3/16	2.1875														A-AR211-203D1	

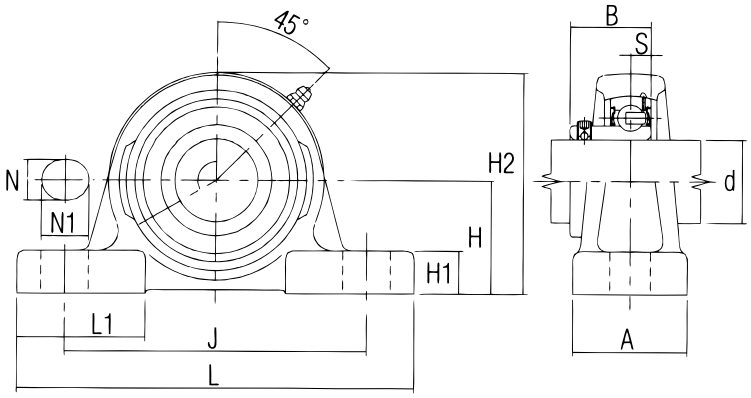

Units: Millimeters
INCHES

NTN

SERIES ARPL

SET SCREW TYPE

PILLOW BLOCKS - ULTRA CLASS LOW BASE

Part Number	Nominal Dimensions												Bolt Size	Lube Hole of Housing	Insert Bearing Number	Housing Number
	d	H	L	J	A	N	N1	H1	H2	L1	B	S				
ARPL-1/2	0.5000	27	121	92.1	34.9	11.1	22.2	13	54	40			3/8	1/4-28UNF	A-AR201-008D1	PL201D1V50
ARPL-9/16	0.5625	1 1/16	4 3/4	3 5/8	1 3/8	7/16	7/8	1/2	2 1/8	1 9/16	0.8858	0.256			A-AR202-009D1	
ARPL-5/8	0.6250														A-AR202-010D1	
ARPL-11/16	0.6875														A-AR203-011D1	
ARPL-3/4	0.7500	31.75	127	96	38.1	11.1	19.8	14	64	42			3/8	1/4-28UNF	A-AR204-012D1	PL204D1V50
		1 1/4	5	3 25/32	1 1/2	7/16	25/32	9/16	2 17/32	1 21/32	1.0039	0.295				
ARPL-13/16	0.8125	33.3	140	104.8	38.1	11.1	20.6	15	68	42			3/8	1/8-27NPT	A-AR205-013D1	PL205D1V50
ARPL-7/8	0.8750	1 5/16	5 1/2	4 1/8	1 1/2	7/16	13/16	19/32	2 11/16	1 21/32	1.0630	0.295			A-AR205-014D1	
ARPL-15/16	0.9375														A-AR205-015D1	
ARPL-1	1.0000														A-AR205-100D1	
ARPL-1 1/16	1.0625	39.7	165	117.5	47.6	14.3	23.8	17	80	54			1/2	1/8-27NPT	A-AR206-101D1	PL206D1V50
ARPL-1 1/8	1.1250	1 9/16	6 1/2	4 5/8	1 7/8	9/16	15/16	21/32	3 5/32	2 1/8	1.1811	0.354			A-AR206-102D1	
ARPL-1 3/16	1.1875														A-AR206-103D1	
ARPL-1 1/4S	1.2500														A-AR206-104D1	
ARPL-1 1/4	1.2500	46	167	130.2	47.6	14.3	24.6	18	91	54			1/2	1/8-27NPT	A-AR207-104D1	PL207D1V50
ARPL-1 5/16	1.3125	1 13/16	6 9/16	5 1/8	1 7/8	9/16	31/32	23/32	3 19/32	2 1/8	1.3780	0.374			A-AR207-105D1	
ARPL-1 3/8	1.3750														A-AR207-106D1	
ARPL-1 7/16	1.4375														A-AR207-107D1	
ARPL-1 1/2	1.5000	49.2	184	136.5	54	14.3	26.2	18	98	52			1/2	1/8-27NPT	A-AR208-108D1	P208D1V50
ARPL-1 9/16	1.5625	1 15/16	7 1/4	5 3/8	2 1/8	9/16	1 1/32	23/32	3 27/32	2 1/16	1.5748	0.374			A-AR208-109D1	
ARPL-1 5/8	1.6250	52.4	190	149.2	54	14.3	28.6	20	104	60			1/2	1/8-27NPT	A-AR209-110D1	PL209D1V50
ARPL-1 11/16	1.6875	2 1/16	7 15/32	5 7/8	2 1/8	9/16	1 1/8	25/32	4 3/32	2 3/8	1.6339	0.433			A-AR209-111D1	
ARPL-1 3/4	1.7500														A-AR209-112D1	
ARPL-1 13/16	1.8125	55.6	206	158	60.3	17.5	23.8	21	112	65			5/8	1/8-27NPT	A-AR210-113D1	PL210D1V50
ARPL-1 7/8	1.8750	2 3/16	8 1/8	6 7/32	2 3/8	11/16	15/16	13/16	4 13/32	2 9/16	1.6929	0.433			A-AR210-114D1	
ARPL-1 15/16	1.9375														A-AR210-115D1	
ARPL-2S	2.0000														A-AR210-200D1	
ARPL-2	2.0000	61.9	219	176.2	60	18.3	29.4	23	124	65			5/8	1/8-27NPT	A-AR211-200D1	PL211D1V50
ARPL-2 1/16	2.0625	2 7/16	8 5/8	6 15/16	2 3/8	23/32	1 5/32	29/32	4 7/8	2 9/16	1.6929	0.472			A-AR211-201D1	
ARPL-2 1/8	2.1250														A-AR211-202D1	
ARPL-2 3/16	2.1875														A-AR211-203D1	

NTN

SERIES UELP

ECCENTRIC LOCKING COLLAR TYPE

Units: Millimeters
INCHES

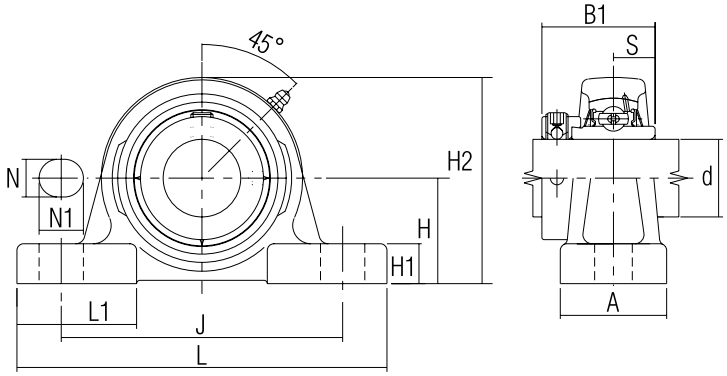

PILLOW BLOCKS - ULTRA CLASS

Part Number	Nominal Dimensions d	H	L	J	A	N	N1	H1	H2	L1	B1	S	Bolt Size	Lube Hole of Housing	Insert Bearing Number	Housing Number
UELP-1/2	0.5000	30.2	127	92.1	38	11.1	22.2	14	62	42	37.3	12.4	3/8	1/4-28UNF	A-UEL201-008D1	P201D1V50
UELP-9/16	0.5625	1 3/16	5	3 5/8	1 1/2	7/16	7/8	9/16	2 7/16	1 21/32	1.469	0.488			A-UEL202-009D1	
UELP-5/8	0.6250														A-UEL202-010D1	
UELP-11/16	0.6875														A-UEL203-011D1	
UELP-3/4	0.7500	33.3	127	96	38	11.1	19.8	14	65	42	43.7	17.1	3/8	1/4-28UNF	A-UEL204-012D1	P204D1V50
		1 5/16	5	3 25/32	1 1/2	7/16	25/32	9/16	2 9/16	1 21/32	1.720	0.673				
UELP-13/16	0.8125	36.5	140	104.8	38	11.1	20.6	15	71	42	44.4	17.5	3/8	1/8-27NPT	A-UEL205-013D1	P205D1V50
UELP-7/8	0.8750	1 7/16	5 1/2	4 1/8	1 1/2	7/16	13/16	19/32	2 25/32	1 21/32	1.748	0.689			A-UEL205-014D1	
UELP-15/16	0.9375														A-UEL205-015D1	
UELP-1	1.0000														A-UEL205-100D1	
UELP-1 1/16	1.0625	42.9	165	117.5	48	14.3	23.8	17	83	54	48.4	18.3	1/2	1/8-27NPT	A-UEL206-101D1	P206D1V50
UELP-1 1/8	1.1250	1 11/16	6 1/2	4 5/8	1 7/8	9/16	15/16	21/32	3 9/32	2 1/8	1.906	0.720			A-UEL206-102D1	
UELP-1 3/16	1.1875														A-UEL206-103D1	
UELP-1 1/4S	1.2500														A-UEL206-104D1	
UELP-1 1/4	1.2500	47.6	167	130.2	48	14.3	24.6	18	93	54	51.1	18.8	1/2	1/8-27NPT	A-UEL207-104D1	P207D1V50
UELP-1 5/16	1.3125	1 7/8	6 9/16	5 1/8	1 7/8	9/16	31/32	23/32	3 21/32	2 1/8	2.012	0.740			A-UEL207-105D1	
UELP-1 3/8	1.3750														A-UEL207-106D1	
UELP-1 7/16	1.4375														A-UEL207-107D1	
UELP-1 1/2	1.5000	49.2	184	136.5	54	14.3	26.2	18	98	52	56.3	21.4	1/2	1/8-27NPT	A-UEL208-108D1	P208D1V50
UELP-1 9/16	1.5625	1 15/16	7 1/4	5 3/8	2 1/8	9/16	1 1/32	23/32	3 27/32	2 1/16	2.217	0.843			A-UEL208-109D1	
UELP-1 5/8	1.6250	54	190	149.2	54	14.3	28.6	20	106	60	56.3	21.4	1/2	1/8-27NPT	A-UEL209-110D1	P209D1V50
UELP-1 11/16	1.6875	2 1/8	7 15/32	5 7/8	2 1/8	9/16	1 1/8	25/32	4 3/16	2 3/8	2.217	0.843			A-UEL209-111D1	
UELP-1 3/4	1.7500														A-UEL209-112D1	
UELP-1 13/16	1.8125	57.2	206	158	60	17.5	23.8	21	114	65	62.7	24.6	5/8	1/8-27NPT	A-UEL210-113D1	P210D1V50
UELP-1 7/8	1.8750	2 1/4	8 1/8	6 7/32	2 3/8	11/16	15/16	13/16	4 1/2	2 9/16	2.469	0.969			A-UEL210-114D1	
UELP-1 15/16	1.9375														A-UEL210-115D1	
UELP-2S	2.0000														A-UEL210-200D1	
UELP-2	2.0000	63.5	219	176.2	60	18.3	29.4	23	126	65	71.4	27.8	5/8	1/8-27NPT	A-UEL211-200D1	P211D1V50
UELP-2 1/16	2.0625	2 1/2	8 5/8	6 15/16	2 3/8	23/32	1 5/32	29/32	4 31/32	2 9/16	2.811	1.094			A-UEL211-201D1	
UELP-2 1/8	2.1250														A-UEL211-202D1	
UELP-2 3/16	2.1875														A-UEL211-203D1	
UELP-2 1/4	2.2500	69.8	241	188.1	70	18.3	29.4	25	138	70	77.8	31.0	5/8	1/8-27NPT	A-UEL212-204D1	P212D1V50
UELP-2 5/16	2.3125	2 3/4	9 1/2	7 13/32	2 3/4	23/32	1 5/32	31/32	5 7/16	2 3/4	3.063	1.220			A-UEL212-205D1	
UELP-2 3/8	2.3750														A-UEL212-206D1	
UELP-2 7/16	2.4375														A-UEL212-207D1	
UELP-2 1/2	2.5	76.2	265	203	70	25	28	27	151	77	85.7	34.15	3/4	1 /8-27NPT	A-UEL213-208D1	P213D1V50
UELP-2 9/16	2.5625	3	10 7/16	8	2 3/4	31/32	1 3/32	1 1/16	5 5/16	3 1/32	3.374	1.344			A-UEL213-209D1	
UELP-2 5/8 R	2.625	79.4	266	210	72	25	28	27	157	77	85.7	34.15	3/4	1 /8-27NPT	A-UEL214-210D1	P214D1V50
UELP-2 11/16 R	2.6875	3 1/8	10 15/32	8 9/32	2 5/6	31/32	1 3/32	1 1/16	6 3/16	3 1/32	3.374	1.344			A-UEL214-211D1	
UELP-2 3/4 R	2.75														A-UEL214-212D1	
UELP-2 13/16	2.8125	82.6	275	215.9	74	22.2	31.8	28	163	80	92	37.3	3/4	1/8-27NPT	A-UEL215-213D1	P215D1V50
UELP-2 7/8	2.8750	3 1/4	10 13/16	8 1/2	2 29/32	7/8	1 1/4	1 3/32	6 13/32	3 5/32	3.622	1.469			A-UEL215-214D1	
UELP-2 15/16	2.9375														A-UEL215-215D1	
UELP-3	3.0000														A-UEL215-300D1	

Note: Metric Sizes available. The production and shipment of black oxide coated inserts will be introduced as a rolling change. This is denoted with an M at the end of the current part number. Please consult NTN for availability.

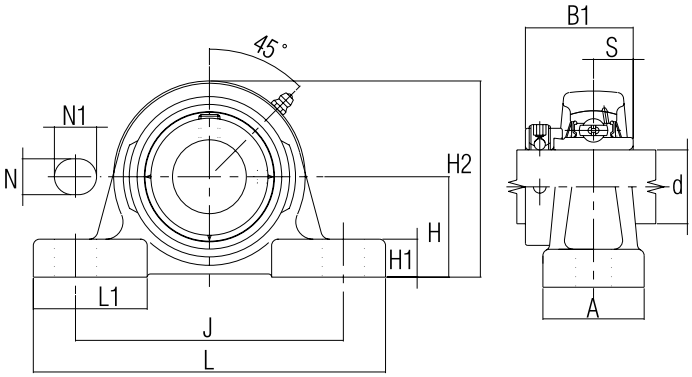

Units: Millimeters
INCHES

NTN

SERIES UELPL

ECCENTRIC LOCKING COLLAR TYPE

PILLOW BLOCKS - ULTRA CLASS

Part Number	Nominal Dimensions												Bolt Size	Lube Hole of Housing	Insert Bearing Number	Housing Number
	d	H	L	J	A	N	N1	H1	H2	L1	B1	S				
UELPL-1/2	0.5000	27	121	92.1	34.9	11.1	22.2	13	54	40	37.3	12.4	3/8	1/4-28UNF	A-UEL201-008D1	PL201D1V50
UELPL-9/16	0.5625	1 1/16	4 3/4	3 5/8	1 3/8	7/16	7/8	1/2	2 1/8	1 9/16	1.469	0.488			A-UEL202-009D1	
UELPL-5/8	0.6250														A-UEL202-010D1	
UELPL-11/16	0.6875														A-UEL203-011D1	
UELPL-3/4	0.7500	31.75	127	96	38.1	11.1	19.8	14	64	42	43.7	17.1	3/8	1/4-28UNF	A-UEL204-012D1	PL204D1V50
		1 1/4	5	3 25/32	1 1/2	7/16	25/32	9/16	2 17/32	1 21/32	1.720	0.673				
UELPL-13/16	0.8125	33.3	140	104.8	38.1	11.1	20.6	15	68	42	44.4	17.5	3/8	1/8-27NPT	A-UEL205-013D1	PL205D1V50
UELPL-7/8	0.8750	1 5/16	5 1/2	4 1/8	1 1/2	7/16	13/16	19/32	2 11/16	1 21/32	1.748	0.689			A-UEL205-014D1	
UELPL-15/16	0.9375														A-UEL205-015D1	
UELPL-1	1.0000														A-UEL205-100D1	
UELPL-1 1/16	1.0625	39.7	165	117.5	47.6	14.3	23.8	17	80	54	48.4	18.3	1/2	1/8-27NPT	A-UEL206-101D1	PL206D1V50
UELPL-1 1/8	1.1250	1 9/16	6 1/2	4 5/8	1 7/8	9/16	15/16	21/32	3 5/32	2 1/8	1.906	0.720			A-UEL206-102D1	
UELPL-1 3/16	1.1875														A-UEL206-103D1	
UELPL-1 1/4S	1.2500														A-UEL206-104D1	
UELPL-1 1/4	1.2500	46	167	130.2	47.6	14.3	24.6	18	91	54	51.1	18.8	1/2	1/8-27NPT	A-UEL207-104D1	PL207D1V50
UELPL-1 5/16	1.3125	1 13/16	6 9/16	5 1/8	1 7/8	9/16	31/32	23/32	3 19/32	2 1/8	2.012	0.740			A-UEL207-105D1	
UELPL-1 3/8	1.3750														A-UEL207-106D1	
UELPL-1 7/16	1.4375														A-UEL207-107D1	
UELPL-1 1/2	1.5000	49.2	184	136.5	54	14.3	26.2	18	98	52	56.3	21.4	1/2	1/8-27NPT	A-UEL208-108D1	P208D1V50
UELPL-1 9/16	1.5625	1 15/16	7 1/4	5 3/8	2 1/8	9/16	1 1/32	23/32	3 27/32	2 1/16	2.217	0.843			A-UEL208-109D1	
UELPL-1 5/8	1.6250	54	190	149.2	54	14.3	28.6	20	104	60	56.3	21.4	1/2	1/8-27NPT	A-UEL209-110D1	PL209D1V50
UELPL-1 11/16	1.6875	2 1/8	7 15/32	5 7/8	2 1/8	9/16	1 1/8	25/32	4 3/32	2 3/8	2.217	0.843			A-UEL209-111D1	
UELPL-1 3/4	1.7500														A-UEL209-112D1	
UELPL-1 13/16	1.8125	55.6	206	158	60.3	17.5	23.8	21	112	65	62.7	24.6	5/8	1/8-27NPT	A-UEL210-113D1	PL210D1V50
UELPL-1 7/8	1.8750	2 3/16	8 1/8	6 7/32	2 3/8	11/16	15/16	13/16	4 13/32	2 9/16	2.469	0.969			A-UEL210-114D1	
UELPL-1 15/16	1.9375														A-UEL210-115D1	
UELPL-2S	2.0000														A-UEL210-200D1	
UELPL-2	2.0000	61.9	219	176.2	60	18.3	29.4	23	124	65	71.4	27.8	5/8	1/8-27NPT	A-UEL211-200D1	PL211D1V50
UELPL-2 1/16	2.0625	2 7/16	8 5/8	6 15/16	2 3/8	23/32	1 5/32	29/32	4 7/8	2 9/16	2.811	1.094			A-UEL211-201D1	
UELPL-2 1/8	2.1250														A-UEL211-202D1	
UELPL-2 3/16	2.1875														A-UEL211-203D1	
UELPL-2 1/4	2.2500	68.3	241	188.1	69.9	17.5	29.4	25	136	70	77.8	31.0	5/8	1/8-27NPT	A-UEL212-204D1	PL212D1V50
UELPL-2 5/16	2.3125	2 11/16	9 1/2	7 13/32	2 3/4	11/16	1 5/32	31/32	5 11/32	2 3/4	3.063	1.220			A-UEL212-205D1	
UELPL-2 3/8	2.3750														A-UEL212-206D1	
UELPL-2 7/16	2.4375														A-UEL212-207D1	
UELPL-2 1/2	2.5000	76.2	265	203.2	70	25	28	27	151	77	85.7	34.15	3/4	1/8-27NPT	A-UEL213-208D1	PL213D1V50
UELPL-2 9/16	2.5625	3	10 15/32	8	2 3/4	31/32	1 3/32	1 1/16	5 15/16	3 1/32	3.374	1.344			A-UEL213-209D1	
UELPL-2 5/8	2.6250	76.2	266	203.2	72.2	20.6	34.9	27	154	77	85.7	34.1	3/4	1/8-27NPT	A-UEL214-210D1	PL214D1V50
UELPL-2 11/16	2.6875	3	10 15/32	8	2 27/32	13/16	1 3/8	1 1/16	6 1/16	3 1/32	3.374	1.344			A-UEL214-211D1	
UELPL-2 3/4	2.7500														A-UEL214-212D1	
UELPL-2 13/16	2.8125	84.1	305	241.3	73.8	22.2	31.8	28	165	80	92	37.3	3/4	1/8-27NPT	A-UEL215-213D1	PL215D1V50
UELPL-2 7/8	2.8750	3 5/16	12	9 1/2	2 29/32	7/8	1 1/4	1 3/32	6 1/2	3 5/32	3.622	1.469			A-UEL215-214D1	
UELPL-2 15/16	2.9375														A-UEL215-215D1	
UELPL-3	3.0000														A-UEL215-300D1	

Note: Metric Sizes available. The production and shipment of black oxide coated inserts will be introduced as a rolling change. This is denoted with an M at the end of the current part number. Please consult NTN for availability.

SERIES JELP

ECCENTRIC LOCKING COLLAR TYPE

Units: Millimeters
INCHES

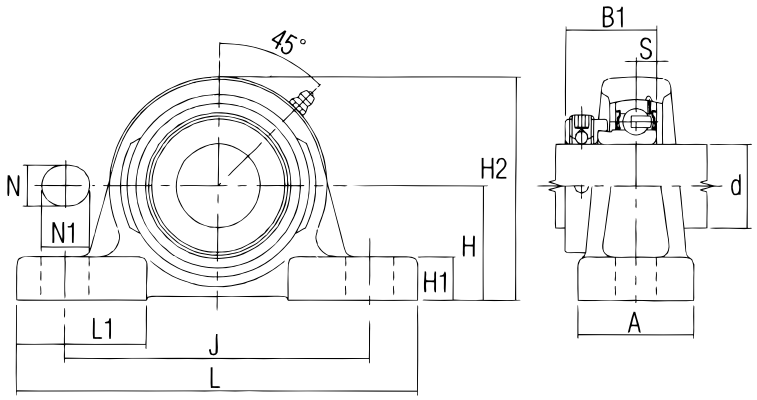

PILLOW BLOCKS - ULTRA CLASS HIGH BASE

Part Number	Nominal Dimensions d	H	L	J	A	N	N1	H1	H2	L1	B1	S	Bolt Size	Lube Hole of Housing	Insert Bearing Number	Housing Number
JELP-½	0.5000	1 3/16	127	92.1	38.1	11.1	22.2	14	2 7/16	42	1.126	0.256	3/8	1/4-28UNF	A-JEL201-008D1	PL201D1V50
JELP-9/16	0.5625		5	3 5/8	1 1/2	7/16	7/8	9/16		1 21/32					A-JEL202-009D1	
JELP-5/8	0.6250														A-JEL202-010D1	
JELP-11/16	0.6875														A-JEL203-011D1	
JELP-3/4	0.7500	1 5/16	127	96	38.1	11.1	19.8	14	2 9/16	42	1.220	0.295	3/8	1/4-28UNF	A-JEL204-012D1	PL204D1V50
			5	3 25/32	1 1/2	7/16	25/32	9/16		1 21/32						
JELP-13/16	0.8125	1 7/16	140	104.8	38.1	11.1	20.6	15	2 25/32	42	1.220	0.295	3/8	1/8-27NPT	A-JEL205-013D1	PL205D1V50
JELP-7/8	0.8750		5 1/2	4 1/8	1 1/2	7/16	13/16	19/32		1 21/32					A-JEL205-014D1	
JELP-15/16	0.9375														A-JEL205-015D1	
JELP-1	1.0000														A-JEL205-100D1	
JELP-1 1/16	1.0625	1 11/16	165	117.5	47.6	14.3	23.8	17	3 9/32	54	1.406	0.354	1/2	1/8-27NPT	A-JEL206-101D1	PL206D1V50
JELP-1 1/8	1.1250		6 1/2	4 5/8	1 7/8	9/16	15/16	21/32		2 1/8					A-JEL206-102D1	
JELP-1 3/16	1.1875														A-JEL206-103D1	
JELP-1 1/4S	1.2500														A-JEL206-104D1	
JELP-1 1/4	1.2500	1 7/8	167	130.2	47.6	14.3	24.6	18	3 21/32	54	1.531	0.374	1/2	1/8-27NPT	A-JEL207-104D1	PL207D1V50
JELP-1 5/16	1.3125		6 9/16	5 1/8	1 7/8	9/16	31/32	23/32		2 1/8					A-JEL207-105D1	
JELP-1 3/8	1.3750														A-JEL207-106D1	
JELP-1 7/16	1.4375														A-JEL207-107D1	
JELP-1 1/2	1.5000	49.2	184	136.5	54	14.3	26.2	18	98	52	1.720	0.433	1/2	1/8-27NPT	A-JEL208-108D1	PL208D1V50
JELP-1 9/16	1.5625	1 15/16	7 1/4	5 3/8	2 1/8	9/16	1 1/32	23/32	3 27/32	2 1/16					A-JEL208-109D1	
JELP-1 5/8	1.6250	2 1/8	190	149.2	54	14.3	28.6	20	4 3/16	60	1.720	0.433	1/2	1/8-27NPT	A-JEL209-110D1	PL209D1V50
JELP-1 11/16	1.6875		7 15/32	5 7/8	2 1/8	9/16	1 1/8	25/32		2 3/8					A-JEL209-111D1	
JELP-1 3/4	1.7500														A-JEL209-112D1	
JELP-1 13/16	1.8125	2 1/4	206	158	60.3	17.5	23.8	21	4 1/2	65	1.720	0.433	5/8	1/8-27NPT	A-JEL210-113D1	PL210D1V50
JELP-1 7/8	1.8750		8 1/8	6 7/32	2 3/8	11/16	15/16	13/16		2 9/16					A-JEL210-114D1	
JELP-1 15/16	1.9375														A-JEL210-115D1	
JELP-2S	2.0000														A-JEL210-200D1	
JELP-2	2.0000	2 1/2	219	176.2	60	18.3	29.4	23	4 31/32	65	1.906	0.472	5/8	1/8-27NPT	A-JEL211-200D1	PL211D1V50
JELP-2 1/16	2.0625		8 5/8	6 15/16	2 3/8	23/32	1 5/32	29/32		2 9/16					A-JEL211-201D1	
JELP-2 1/8	2.1250														A-JEL211-202D1	
JELP-2 3/16	2.1875														A-JEL211-203D1	

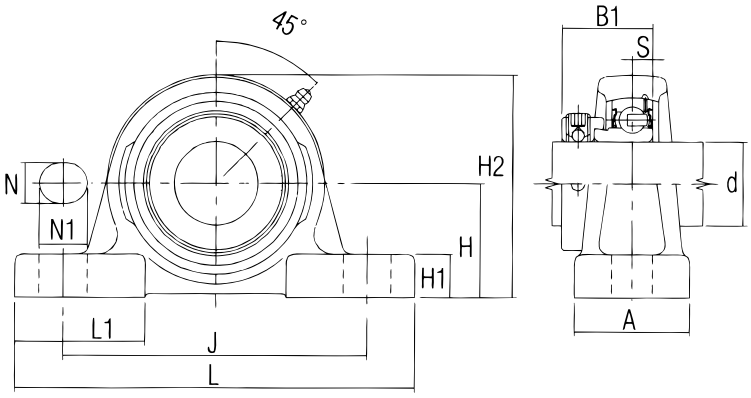

Units: Millimeters
INCHES

NTN

SERIES JELPL

ECCENTRIC LOCKING COLLAR TYPE

PILLOW BLOCKS - ULTRA CLASS LOW BASE

Part Number	Nominal Dimensions												Bolt Size	Lube Hole of Housing	Insert Bearing Number	Housing Number
	d	H	L	J	A	N	N1	H1	H2	L1	B1	S				
JELPL-1/2	0.5000	27	121	92.1	34.9	11.1	22.2	13	54	40			3/8	1/4-28UNF	A-JEL201-008D1	PL201D1V50
JELPL-9/16	0.5625	1 1/16	4 3/4	3 5/8	1 3/8	7/16	7/8	1/2	2 1/8	1 9/16	1.126	0.256			A-JEL202-009D1	
JELPL-5/8	0.6250														A-JEL202-010D1	
JELPL-11/16	0.6875														A-JEL203-011D1	
JELPL-3/4	0.7500	31.75	127	96	38.1	11.1	19.8	14	64	42			3/8	1/4-28UNF	A-JEL204-012D1	PL204D1V50
		1 1/4	5	3 25/32	1 1/2	7/16	25/32	9/16	2 17/32	1 21/32	1.220	0.295				
JELPL-13/16	0.8125	33.3	140	104.8	38.1	11.1	20.6	15	68	42			3/8	1/8-27NPT	A-JEL205-013D1	PL205D1V50
JELPL-7/8	0.8750	1 5/16	5 1/2	4 1/8	1 1/2	7/16	13/16	19/32	2 11/16	1 21/32	1.220	0.295			A-JEL205-014D1	
JELPL-15/16	0.9375														A-JEL205-015D1	
JELPL-1	1.0000														A-JEL205-100D1	
JELPL-1 1/16	1.0625	39.7	165	117.5	47.6	14.3	23.8	17	80	54			1/2	1/8-27NPT	A-JEL206-101D1	PL206D1V50
JELPL-1 1/8	1.1250	1 9/16	6 1/2	4 5/8	1 7/8	9/16	15/16	21/32	3 5/32	2 1/8	1.406	0.354			A-JEL206-102D1	
JELPL-1 3/16	1.1875														A-JEL206-103D1	
JELPL-1 1/4S	1.2500														A-JEL206-104D1	
JELPL-1 1/4	1.2500	46	167	130.2	47.6	14.3	24.6	18	91	54			1/2	1/8-27NPT	A-JEL207-104D1	PL207D1V50
JELPL-1 5/16	1.3125	1 13/16	6 9/16	5 1/8	1 7/8	9/16	31/32	23/32	3 19/32	2 1/8	1.531	0.374			A-JEL207-105D1	
JELPL-1 3/8	1.3750														A-JEL207-106D1	
JELPL-1 7/16	1.4375														A-JEL207-107D1	
JELPL-1 1/2	1.5000	49.2	184	136.5	54	14.3	26.2	18	98	52			1/2	1/8-27NPT	A-JEL208-108D1	P208D1V50
JELPL-1 9/16	1.5625	1 15/16	7 1/4	5 3/8	2 1/8	9/16	1 1/32	23/32	3 27/32	2 1/16	1.720	0.374			A-JEL208-109D1	
JELPL-1 5/8	1.6250	52.4	190	149.2	54	14.3	28.6	20	104	60			1/2	1/8-27NPT	A-JEL209-110D1	PL209D1V50
JELPL-1 11/16	1.6875	2 1/16	7 15/32	5 7/8	2 1/8	9/16	1 1/8	25/32	4 3/32	2 3/8	1.720	0.433			A-JEL209-111D1	
JELPL-1 3/4	1.7500														A-JEL209-112D1	
JELPL-1 13/16	1.8125	55.6	206	158	60.3	17.5	23.8	21	112	65			5/8	1/8-27NPT	A-JEL210-113D1	PL210D1V50
JELPL-1 7/8	1.8750	2 3/16	8 1/8	6 7/32	2 3/8	11/16	15/16	13/16	4 13/32	2 9/16	1.720	0.433			A-JEL210-114D1	
JELPL-1 15/16	1.9375														A-JEL210-115D1	
JELPL-2S	2.0000														A-JEL210-200D1	
JELPL-2	2.0000	61.9	219	176.2	60	18.3	29.4	23	124	65			5/8	1/8-27NPT	A-JEL211-200D1	PL211D1V50
JELPL-2 1/16	2.0625	2 7/16	8 5/8	6 15/16	2 3/8	23/32	1 5/32	29/32	4 7/8	2 9/16	1.906	0.472			A-JEL211-201D1	
JELPL-2 1/8	2.1250														A-JEL211-202D1	
JELPL-2 3/16	2.1875														A-JEL211-203D1	

SERIES UCFLU

SET SCREW TYPE

Units: Millimeters
INCHES

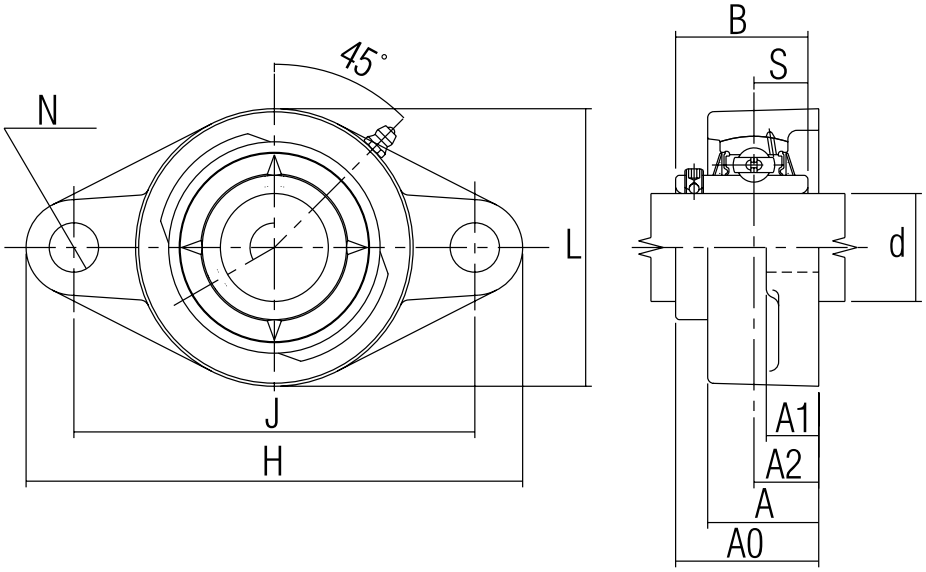

FLANGED UNITS - ULTRA CLASS CAST IRON HOUSING (2 BOLT)

Part Number	Nominal Dimensions											Lube Hole of Housing	Insert Bearing Number	Housing Number
	d	H	J	A2	A1	A	N	L	A0	B	S			
UCFLU-1/2	0.5000	98	76	17	13	28	9.9	61	32.9	27.4	11.5	1/4-28UNF	A-UC201X-008D1	FLU201D1V50
UCFLU-9/16	0.5625	3 27/32	3	21/32	33/64	1 7/64	25/64	2 13/32	1 19/64	1.0787	0.453		A-UC202X-009D1	
UCFLU-5/8	0.6250												A-UC202X-010D1	
UCFLU-11/16	0.6875												A-UC203X-011D1	
UCFLU-3/4	0.7500	113	90	19	15	29.5	10.7	61	37.3	31	12.7	1/4-28UNF	A-UC204-012D1	FLU204D1V50
		4 7/16	3 17/32	3/4	19/32	1 5/32	27/64	2 13/32	1 15/32	1.2205	0.500			
UCFLU-13/16	0.8125	125	99	19	15	30	11.9	70	38.9	34.1	14.3	1/8-27NPT	A-UC205-013D1	FLU205D1V50
UCFLU-7/8	0.8750	4 29/32	3 57/64	3/4	19/32	1 3/16	15/32	2 3/4	1 17/32	1.3425	0.563		A-UC205-014D1	
UCFLU-15/16	0.9375												A-UC205-015D1	
UCFLU-1	1.0000												A-UC205-100D1	
UCFLU-1 1/16	1.0625	142	116.5	20	16	33	11.5	83	42.1	38.1	15.9	1/8-27NPT	A-UC206-101D1	FLU206D1V50
UCFLU-1 1/8	1.1250	5 19/32	4 19/32	25/32	5/8	1 5/16	29/64	3 9/32	1 21/32	1.5000	0.626		A-UC206-102D1	
UCFLU-1 3/16	1.1875												A-UC206-103D1	
UCFLU-1 1/4S	1.2500												A-UC206-104D1	
UCFLU-1 1/4	1.2500	156	130	21	17	36	14.3	96	46.4	42.9	17.5	1/8-27NPT	A-UC207-104D1	FLU207D1V50
UCFLU-1 5/16	1.3125	6 5/32	5 1/8	53/64	21/32	1 13/32	9/16	3 25/32	1 53/64	1.6890	0.689		A-UC207-105D1	
UCFLU-1 3/8	1.3750												A-UC207-106D1	
UCFLU-1 7/16	1.4375												A-UC207-107D1	
UCFLU-1 1/2	1.5000	172	143.5	24	17	39	13.1	105	54.4	49.2	19	1/8-27NPT	A-UC208-108D1	FLU208D1V50
UCFLU-1 9/16	1.5625	6 25/32	5 21/32	15/16	21/32	1 13/32	33/64	4 1/8	2 9/64	1.9370	0.748		A-UC208-109D1	
UCFLU-1 5/8	1.6250	183	148.5	24	18	40	13.1	111	54.4	49.2	19	1/8-27NPT	A-UC208-110D1	FLU209D1V50
UCFLU-1 11/16	1.6875	7 3/32	5 27/32	15/16	23/32	1 9/16	33/64	4 3/8	2 9/64	1.9370	0.748		A-UC209-111D1	
UCFLU-1 3/4	1.7500												A-UC209-112D1	
UCFLU-1 13/16	1.8125	190	157	28	20	46	17.1	116	60.7	51.6	19	1/8-27NPT	A-UC210-113D1	FLU209D1V50
UCFLU-1 7/8	1.8750	7 15/32	6 3/16	1 7/64	25/32	1 13/16	43/64	4 9/16	2 25/64	2.0315	0.748		A-UC210-114D1	
UCFLU-1 15/16	1.9375												A-UC210-115D1	
UCFLU-2S	2.0000												A-UC210-200D1	
UCFLU-2	2.0000	217	184	31	20.5	49	17.1	134	64.3	55.6	22.2	1/8-27NPT	A-UC211-200D1	FLU211D1V50
UCFLU-2 1/16	2.0625	8 17/32	7 1/4	1 7/32	13/16	1 15/16	43/64	5 9/32	2 17/32	2.1890	0.874		A-UC211-201D1	
UCFLU-2 1/8	2.1250												A-UC211-202D1	
UCFLU-2 3/16	2.1875												A-UC211-203D1	

Note: Metric Sizes available. The production and shipment of black oxide coated inserts will be introduced as a rolling change. This is denoted with an M at the end of the current part number. Please consult NTN for availability.

Units: Millimeters
INCHES

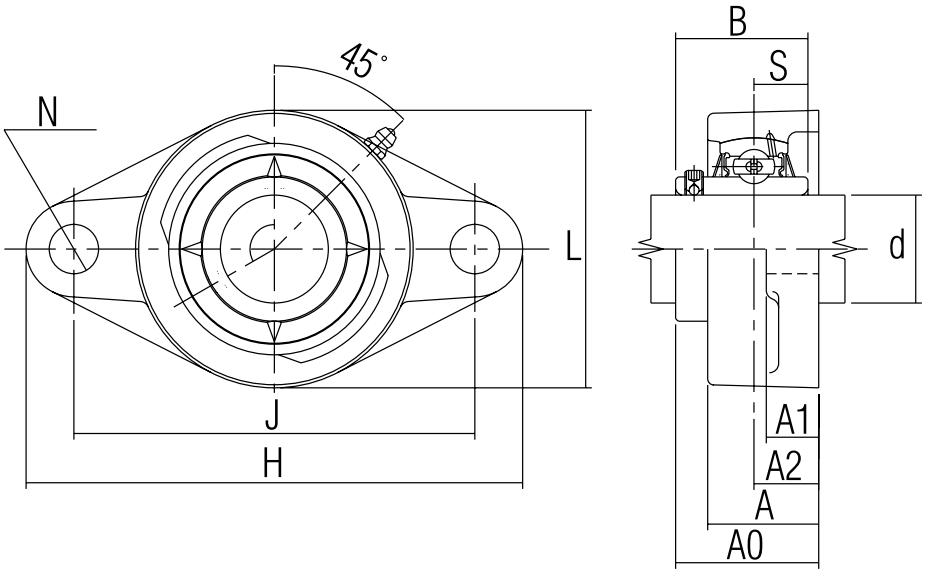

NTN

SERIES UCFLUX

SET SCREW TYPE

FLANGED UNITS - ULTRA CLASS CAST IRON HOUSING (2 BOLT)

Part Number	Nominal Dimensions											Lube Hole of Housing	Insert Bearing Number	Housing Number
	d	H	J	A2	A1	A	N	L	A0	B	S			
UCFLUX-13/16	0.8125	142	116.5	20	16	33	11.5	83	42.1	38.1	15.9	1/8-27NPT	A-UCX05-013D1	FLU206D1V50
UCFLUX-7/8	0.8750	5 19/32	4 19/32	25/32	5/8	1 5/16	29/64	3 9/32	1 21/32	1.5000	0.626		A-UCX05-014D1	
UCFLUX-15/16	0.9375												A-UCX05-015D1	
UCFLUX-1	1.0000												A-UCX05-100D1	
UCFLUX-1 1/16	1.0625	156	130	21	17	36	13.1	96	46.4	42.9	17.5	1/8-27NPT	A-UCX06-101D1	FLU207D1V50
UCFLUX-1 1/8	1.1250	6 5/32	5 1/8	53/64	21/32	1 13/32	33/64	3 25/32	1 53/64	1.6890	0.689		A-UCX06-102D1	
UCFLUX-1 3/16	1.1875												A-UCX06-103D1	
UCFLUX-1 1/4	1.2500												A-UCX07-104D1	
UCFLUX-1 5/16	1.3125	172	143.5	24	17	39	13.1	105	54.4	49.2	19	1/8-27NPT	A-UCX07-105D1	FLU208D1V50
UCFLUX-1 3/8	1.3750	6 25/32	5 21/32	15/16	21/32	1 13/32	33/64	4 1/8	2 9/64	1.9370	0.748		A-UCX07-106D1	
UCFLUX-1 7/16	1.4375												A-UCX07-107D1	
UCFLUX-1 1/2	1.5000	183	148.5	24	18	40	13.1	111	54.4	49.2	19	1/8-27NPT	A-UCX08-108D1	FLU209D1V50
UCFLUX-1 9/16	1.5625	7 3/32	5 27/32	15/16	23/32	1 9/16	33/64	4 3/8	2 9/64	1.9370	0.748		A-UCX08-109D1	
UCFLUX-1 5/8	1.6250	190	157	28	20	46	17.1	116	60.7	51.6	19	1/8-27NPT	A-UCX09-110D1	FLU210D1V50
UCFLUX-1 11/16	1.6875	7 15/32	6 3/16	1 7/64	25/32	1 13/16	43/64	4 9/16	2 25/64	2.0315	0.748		A-UCX09-111D1	
UCFLUX-1 3/4	1.7500												A-UCX09-112D1	
UCFLUX-1 13/16	1.8125												A-UCX10-113D1	
UCFLUX-1 7/8	1.8750	217	184	31	20.5	49	17.1	134	64.3	55.6	22.2	1/8-27NPT	A-UCX10-114D1	FLU211D1V50
UCFLUX-1 15/16	1.9375	8 17/32	7 1/4	1 7/32	13/16	1 15/16	43/64	5 9/32	2 17/32	2.1890	0.874		A-UCX10-115D1	
UCFLUX-2	2.0000												A-UCX11-200D1	

Note: Metric Sizes available. The production and shipment of black oxide coated inserts will be introduced as a rolling change. This is denoted with an M at the end of the current part number. Please consult NTN for availability.

SERIES ARFLU

SET SCREW TYPE

Units: Millimeters
INCHES

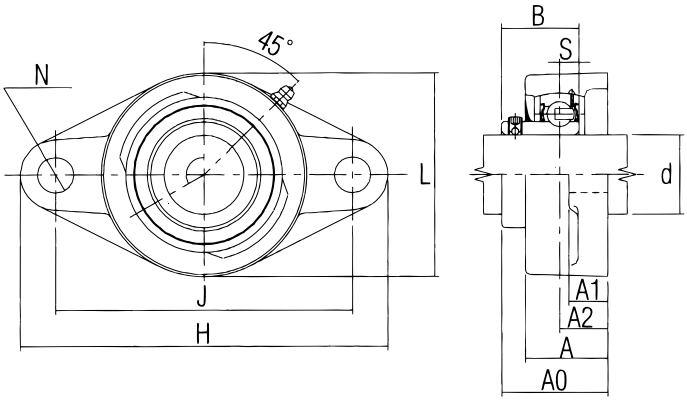

FLANGED UNITS - ULTRA CLASS CAST IRON HOUSING (2 BOLT)

Part Number	Nominal Dimensions											Lube Hole of Housing	Insert Bearing Number	Housing Number
	d	H	J	A2	A1	A	N	L	A0	B1	S			
ARFLU-1/2	0.5000	98	76	17	13	28	9.9	61				1/4-28UNF	A-AR201-008D1	FLU201D1V50
ARFLU-9/16	0.5625	3 27/32	3	21/32	33/64	1 7/64	25/64	2 13/32	1 19/64	1.8858	0.256		A-AR202-009D1	
ARFLU-5/8	0.6250												A-AR202-010D1	
ARFLU-11/16	0.6875												A-AR203-011D1	
ARFLU-3/4	0.7500	113	90	19	15	29.5	10.7	61				1/4-28UNF	A-AR204-012D1	FLU204D1V50
		4 7/16	3 17/32	3/4	19/32	1 5/32	27/64	2 13/32	1 29/64	1.0039	0.295			
ARFLU-13/16	0.8125	125	99	19	15	30	11.9	70				1/8-27NPT	A-AR205-013D1	FLU205D1V50
ARFLU-7/8	0.8750	4 29/32	3 57/64	3/4	19/32	1 3/16	15/32	2 3/4	1 33/64	1.0630	0.295		A-AR205-014D1	
ARFLU-15/16	0.9375												A-AR205-015D1	
ARFLU-1	1.0000												A-AR205-100D1	
ARFLU-1 1/16	1.0625	142	116.5	20	16	33	11.5	83				1/8-27NPT	A-AR206-101D1	FLU206D1V50
ARFLU-1 1/8	1.1250	5 19/32	4 19/32	25/32	5/8	1 5/16	29/64	3 9/32	1 39/64	1.1811	0.354		A-AR206-102D1	
ARFLU-1 3/16	1.1875												A-AR206-103D1	
ARFLU-1 1/4S	1.2500												A-AR206-104D1	
ARFLU-1 1/4	1.2500	156	130	21	17	36	13.1	96				1/8-27NPT	A-AR207-104D1	FLU207D1V50
ARFLU-1 5/16	1.3125	6 5/32	5 1/8	53/64	21/32	1 13/32	33/64	3 25/32	1 53/64	1.3780	0.374		A-AR207-105D1	
ARFLU-1 3/8	1.3750												A-AR207-106D1	
ARFLU-1 7/16	1.4375												A-AR207-107D1	
ARFLU-1 1/2	1.5000	172	143.5	24	17	39	13.1	105				1/8-27NPT	A-AR208-108D1	FLU208D1V50
ARFLU-1 9/16	1.5625	6 25/32	5 21/32	15/16	21/32	1 17/32	33/64	4 1/8	2 3/32	1.5748	0.433		A-AR208-109D1	
ARFLU-1 5/8	1.6250	183	148.5	24	18	40	13.1	111				1/8-27NPT	A-AR209-110D1	FLU209D1V50
ARFLU-1 11/16	1.6875	7 3/32	5 27/32	15/16	23/32	1 9/16	33/64	4 3/8	2 9/64	1.6339	0.433		A-AR209-111D1	
ARFLU-1 3/4	1.7500												A-AR209-112D1	
ARFLU-1 13/16	1.8125	190	157	28	20	46	17.1	116				1/8-27NPT	A-AR210-113D1	FLU210D1V50
ARFLU-1 7/8	1.8750	7 15/32	6 3/16	1 7/64	25/32	1 13/16	43/64	4 9/16	2 23/64	1.6929	0.433		A-AR210-114D1	
ARFLU-1 15/16	1.9375												A-AR210-115D1	
ARFLU-2S	2.0000												A-AR210-200D1	
ARFLU-2	2.0000	217	184	31	20.5	49	17.1	134				1/8-27NPT	A-AR211-200D1	FLU211D1V50
ARFLU-2 1/16	2.0625	8 17/32	7 1/4	1 7/32	13/16	1 15/16	43/64	5 9/32	2 7/16	1.6929	0.472		A-AR211-201D1	
ARFLU-2 1/8	2.1250												A-AR211-202D1	
ARFLU-2 3/16	2.1875												A-AR211-203D1	

Units: Millimeters
INCHES

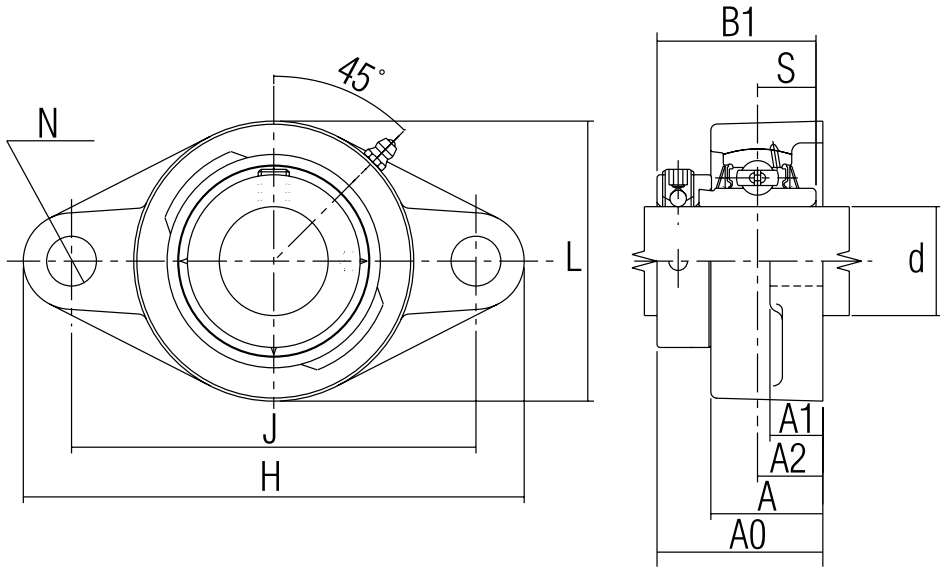

NTN

SERIES UELFLU

ECCENTRIC LOCKING COLLAR TYPE

FLANGED UNITS - ULTRA CLASS CAST IRON HOUSING (2 BOLT)

Part Number	Nominal Dimensions											Lube Hole of Housing	Insert Bearing Number	Housing Number
	d	H	J	A2	A1	A	N	L	A0	B1	S			
UELFLU-1/2	0.5000	98	76	17	13	28	9.9	61	42	37.3	12.4	1/4-28UNF	A-UEL201-008D1	FLU201D1V50
UELFLU-9/16	0.5625	3 27/32	3	21/32	33/64	1 7/64	25/64	2 13/32	1 21/32	1.469	0.488		A-UEL202-009D1	
UELFLU-5/8	0.6250												A-UEL202-010D1	
UELFLU-11/16	0.6875												A-UEL203-011D1	
UELFLU-3/4	0.7500	113	90	19	15	29.5	10.7	61	45.6	43.7	17.1	1/4-28UNF	A-UEL204-012D1	FLU204D1V50
		4 7/16	3 17/32	3/4	19/32	1 5/32	27/64	2 13/32	1 51/64	1.720	0.673			
UELFLU-13/16	0.8125	125	99	19	15	30	11.9	70	45.9	44.4	17.5	1/8-27NPT	A-UEL205-013D1	FLU205D1V50
UELFLU-7/8	0.8750	4 29/32	3 57/64	3/4	19/32	1 3/16	15/32	2 3/4	1 13/16	1.748	0.689		A-UEL205-014D1	
UELFLU-15/16	0.9375												A-UEL205-015D1	
UELFLU-1	1.0000												A-UEL205-100D1	
UELFLU-1 1/16	1.0625	142	116.5	20	16	33	11.5	83	50.1	48.4	18.3	1/8-27NPT	A-UEL206-101D1	FLU206D1V50
UELFLU-1 1/8	1.1250	5 19/32	4 19/32	25/32	5/8	1 5/16	29/64	3 9/32	1 31/32	1.906	0.720		A-UEL206-102D1	
UELFLU-1 3/16	1.1875												A-UEL206-103D1	
UELFLU-1 1/4S	1.2500												A-UEL206-104D1	
UELFLU-1 1/4	1.2500	156	130	21	17	36	13.1	96	53.3	51.1	18.8	1/8-27NPT	A-UEL207-104D1	FLU207D1V50
UELFLU-1 5/16	1.3125	6 5/32	5 1/8	53/64	21/32	1 13/32	33/64	3 25/32	2 3/32	2.012	0.740		A-UEL207-105D1	
UELFLU-1 3/8	1.3750												A-UEL207-106D1	
UELFLU-1 7/16	1.4375												A-UEL207-107D1	
UELFLU-1 1/2	1.5000	172	143.5	24	17	39	13.1	105	58.9	56.3	21.4	1/8-27NPT	A-UEL208-108D1	FLU208D1V50
UELFLU-1 9/16	1.5625	6 25/32	5 21/32	15/16	21/32	1 13/32	33/64	4 1/8	2 5/16	2.217	0.843		A-UEL208-109D1	
UELFLU-1 5/8	1.6250	183	148.5	24	18	40	13.1	111	58.9	56.3	21.4	1/8-27NPT	A-UEL208-110D1	FLU209D1V50
UELFLU-1 11/16	1.6875	7 3/32	5 27/32	15/16	23/32	1 9/16	33/64	4 3/8	2 5/16	2.217	0.843		A-UEL209-111D1	
UELFLU-1 3/4	1.7500												A-UEL209-112D1	
UELFLU-1 13/16	1.8125	190	157	28	20	46	17.1	116	66.1	62.7	24.6	1/8-27NPT	A-UEL210-113D1	FLU209D1V50
UELFLU-1 7/8	1.8750	7 15/32	6 3/16	1 7/64	25/32	1 13/16	43/64	4 9/16	2 39/64	2.469	0.969		A-UEL210-114D1	
UELFLU-1 15/16	1.9375												A-UEL210-115D1	
UELFLU-2S	2.0000												A-UEL210-200D1	
UELFLU-2	2.0000	217	184	31	20.5	49	17.1	134	64.3	55.6	22.2	1/8-27NPT	A-UEL211-200D1	FLU211D1V50
UELFLU-2 1/16	2.0625	8 17/32	7 1/4	1 7/32	13/16	1 15/16	43/64	5 9/32	2 17/32	2.1890	0.874		A-UEL211-201D1	
UELFLU-2 1/8	2.1250												A-UEL211-202D1	
UELFLU-2 3/16	2.1875												A-UEL211-203D1	

Note: Metric Sizes available. The production and shipment of black oxide coated inserts will be introduced as a rolling change. This is denoted with an M at the end of the current part number. Please consult NTN for availability.

SERIES JELFLU

ECCENTRIC LOCKING COLLAR TYPE

Units: Millimeters
INCHES

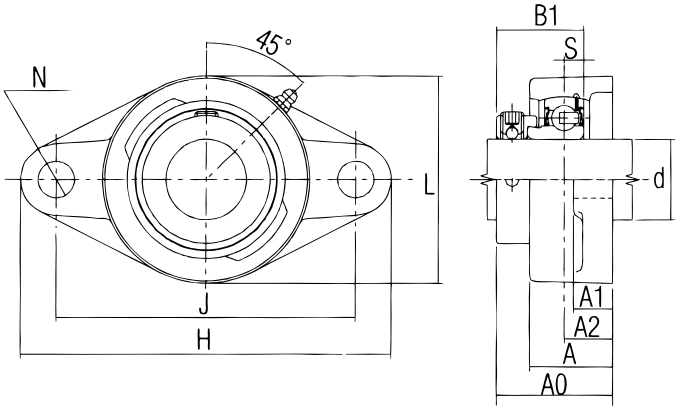

FLANGED UNITS - ULTRA CLASS CAST IRON HOUSING (2 BOLT)

Part Number	Nominal Dimensions											Lube Hole of Housing	Insert Bearing Number	Housing Number
	d	H	J	A2	A1	A	N	L	A0	B1	S			
JELFLU-½	0.5000	98	76	17	13	28	9.9	61				¼-28UNF	A-JEL201-008D1	FLU201D1V50
JELFLU-9/16	0.5625	3 27/32	3	21/32	33/64	1 7/64	25/64	2 13/32	1 35/64	1.126	0.256		A-JEL202-009D1	
JELFLU-⅝	0.6250												A-JEL202-010D1	
JELFLU-11/16	0.6875												A-JEL203-011D1	
JELFLU-¾	0.7500	113	90	19	15	29.5	10.7	61				¼-28UNF	A-JEL204-012D1	FLU204D1V50
		4 7/16	3 17/32	¾	19/32	1 5/32	27/64	2 13/32	1 43/64	1.220	0.295			
JELFLU-13/16	0.8125	125	99	19	15	30	11.9	70				⅛-27NPT	A-JEL205-013D1	FLU205D1V50
JELFLU-⅞	0.8750	4 29/32	3 57/64	¾	19/32	1 3/16	15/32	2 ¾	1 43/64	1.220	0.295		A-JEL205-014D1	
JELFLU-15/16	0.9375												A-JEL205-015D1	
JELFLU-1	1.0000												A-JEL205-100D1	
JELFLU-1 1/16	1.0625	142	116.5	20	16	33	11.5	83				⅛-27NPT	A-JEL206-101D1	FLU206D1V50
JELFLU-1 ⅛	1.1250	5 19/32	4 19/32	25/32	⅝	1 5/16	29/64	3 9/32	1 27/32	1.406	0.354		A-JEL206-102D1	
JELFLU-1 3/16	1.1875												A-JEL206-103D1	
JELFLU-1 ¼S	1.2500												A-JEL206-104D1	
JELFLU-1 ¼	1.2500	156	130	21	17	36	13.1	96				⅛-27NPT	A-JEL207-104D1	FLU207D1V50
JELFLU-1 5/16	1.3125	6 5/32	5 ⅛	53/64	21/32	1 13/32	33/64	3 25/32	1 63/64	1.531	0.374		A-JEL207-105D1	
JELFLU-1 ⅜	1.3750												A-JEL207-106D1	
JELFLU-1 7/16	1.4375												A-JEL207-107D1	
JELFLU-1 ½	1.5000	172	143.5	24	17	39	13.1	105				⅛-27NPT	A-JEL208-108D1	FLU208D1V50
JELFLU-1 9/16	1.5625	6 25/32	5 21/32	15/16	21/32	1 17/32	33/64	4 ⅛	2 15/64	1.720	0.433		A-JEL208-109D1	
JELFLU-1 ⅝	1.6250	183	148.5	24	18	40	13.1	111				⅛-27NPT	A-JEL209-110D1	FLU209D1V50
JELFLU-1 11/16	1.6875	7 3/32	5 27/32	15/16	23/32	1 9/16	33/64	4 ⅜	2 15/64	1.720	0.433		A-JEL209-111D1	
JELFLU-1 ¾	1.7500												A-JEL209-112D1	
JELFLU-1 13/16	1.8125	190	157	28	20	46	17.1	116				⅛-27NPT	A-JEL210-113D1	FLU210D1V50
JELFLU-1 ⅞	1.8750	7 15/32	6 3/16	1 7/64	25/32	1 13/16	43/64	4 9/16	2 25/64	1.720	0.433		A-JEL210-114D1	
JELFLU-1 15/16	1.9375												A-JEL210-115D1	
JELFLU-2S	2.0000												A-JEL210-200D1	
JELFLU-2	2.0000	217	184	31	20.5	49	17.1	134				⅛-27NPT	A-JEL211-200D1	FLU211D1V50
JELFLU-2 1/16	2.0625	8 17/32	7 ¼	1 7/32	13/16	1 15/16	43/64	5 9/32	2 21/32	1.906	0.472		A-JEL211-201D1	
JELFLU-2 ⅛	2.1250												A-JEL211-202D1	
JELFLU-2 3/16	2.1875												A-JEL211-203D1	

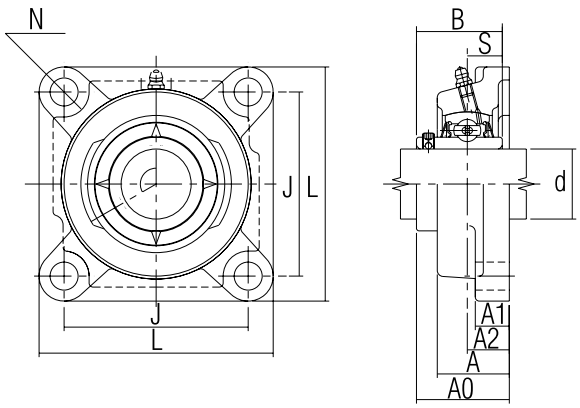

Units: Millimeters
INCHES

NTN

SERIES UCFU

SET SCREW TYPE

FLANGED UNITS - ULTRA CLASS CAST IRON HOUSING (4 BOLT)

Part Number	Nominal Dimensions										Lube Hole of Housing	Insert Bearing Number	Housing Number
	d	L	J	A2	A1	A	N	A0	B	S			
UCFU-1/2	0.5000	76	54	17	13	28	10.7	32.9	27.4	11.5	1/4-28UNF	A-UC201X-008D1	FU201D1V50
UCFU-9/16	0.5625	3	2 1/8	21/32	1/2	1 7/64	27/64	1 19/64	1.0787	0.453		A-UC202X-009D1	
UCFU-5/8	0.6250											A-UC202X-010D1	
UCFU-11/16	0.6875											A-UC203X-011D1	
UCFU-3/4	0.7500	86	63.5	19	15	29.5	10.7	37.3	31	12.7	1/4-28UNF	A-UC204-012D1	FU204D1V50
		3 3/8	2 1/2	3/4	19/32	1 5/32	27/64	1 15/32	1.2205	0.500			
UCFU-13/16	0.8125	96	70	19	15	30	11.5	38.9	34.1	14.3	1/8-27NPT	A-UC205-013D1	FU205D1V50
UCFU-7/8	0.8750	3 25/32	2 3/4	3/4	19/32	1 3/16	29/64	1 17/32	1.3425	0.563		A-UC205-014D1	
UCFU-15/16	0.9375											A-UC205-015D1	
UCFU-1	1.0000											A-UC205-100D1	
UCFU-1 1/16	1.0625	109	82.5	20	16	33	11.5	42.1	38.1	15.9	1/8-27NPT	A-UC206-101D1	FU206D1V50
UCFU-1 1/8	1.1250	4 9/32	3 1/4	25/32	5/8	1 5/16	29/64	1 21/32	1.5000	0.626		A-UC206-102D1	
UCFU-1 3/16	1.1875											A-UC206-103D1	
UCFU-1 1/4S	1.2500											A-UC206-104D1	
UCFU-1 1/4	1.2500	118	92	21	17	36	13.1	46.4	42.9	17.5	1/8-27NPT	A-UC207-104D1	FU207D1V50
UCFU-1 5/16	1.3125	4 21/32	3 5/8	53/64	21/32	1 13/32	33/64	1 53/64	1.6890	0.689		A-UC207-105D1	
UCFU-1 3/8	1.3750											A-UC207-106D1	
UCFU-1 7/16	1.4375											A-UC207-107D1	
UCFU-1 1/2	1.5000	131	101.5	24	17	39	13.1	54.3	49.2	19	1/8-27NPT	A-UC208-108D1	FU208D1V50
UCFU-1 9/16	1.5625	5 3/32	4	15/16	21/32	1 17/32	33/64	2 9/64	1.9370	0.748		A-UC208-109D1	
UCFU-1 5/8	1.6250	137	105	24	17	40	13.1	54.3	49.2	19	1/8-27NPT	A-UC209-110D1	FU209D1V50
UCFU-1 11/16	1.6875	5 13/32	4 1/8	15/16	23/32	1 9/16	33/64	2 9/64	1.9370	0.748		A-UC209-111D1	
UCFU-1 3/4	1.7500											A-UC209-112D1	
UCFU-1 13/16	1.8125	144	111	28	20	46	17.1	60.7	51.6	19	1/8-27NPT	A-UC210-113D1	FU210D1V50
UCFU-1 7/8	1.8750	5 21/32	4 3/8	1 7/64	25/32	1 13/16	43/64	2 25/64	2.0315	0.748		A-UC210-114D1	
UCFU-1 15/16	1.9375											A-UC210-115D1	
UCFU-2S	2.0000											A-UC210-200D1	
UCFU-2	2.0000	163	130	31	21	49	17.1	64.3	55.6	22.2	1/8-27NPT	A-UC211-200D1	FU211D1V50
UCFU-2 1/16	2.0625	6 13/32	5 1/8	1 7/32	13/16	1 15/16	43/64	2 17/32	2.1890	0.874		A-UC211-201D1	
UCFU-2 1/8	2.1250											A-UC211-202D1	
UCFU-2 3/16	2.1875											A-UC211-203D1	
UCFU-2 1/4	2.2500	175	143	34	21	53	17.1	73.8	65.1	25.4	1/8-27NPT	A-UC212-204D1	FU212D1V50
UCFU-2 5/16	2.3125	6 7/8	5 5/8	1 11/32	13/16	2 3/32	43/64	2 29/32	2.5630	1.000		A-UC212-205D1	
UCFU-2 3/8	2.3750											A-UC212-206D1	
UCFU-2 7/16	2.4375											A-UC212-207D1	
UCFU-2 1/2R	2.5000	187	149	38	22	59	19	77.7	65.1	25.4	1/8-27NPT	A-UC213-208D1	FU213D1V50
UCFU-2 9/16R	2.5625	7 3/8	5 55/64	1 1/2	7/8	2 5/16	3/4	3 1/16	2.563	1		A-UC213-209D1	
UCFU-2 5/8R	2.6250	193	149	38	22	62	16.3	82.6	74.6	30.2	1/8-27NPT	A-UC214-210D1	FU214D1V50
UCFU-2 11/16R	2.6875	7 19/32	5 7/8	1 1/2	7/8	2 7/16	41/64	3 1/4	2.9370	1.189		A-UC214-211D1	
UCFU-2 3/4R	2.7500											A-UC214-212D1	
UCFU-2 13/16	2.8125	200	152	41	22	65	19.8	85.3	77.8	33.3	1/8-27NPT	A-UC215-213D1	FU215D1V50
UCFU-2 7/8	2.8750	7 7/8	6	1 39/64	7/8	2 9/16	25/32	3 23/64	3.0630	1.311		A-UC215-214D1	
UCFU-2 15/16	2.9375											A-UC215-215D1	
UCFU-3	3.0000											A-UC215-300D1	

Note: Metric Sizes available. The production and shipment of black oxide coated inserts will be introduced as a rolling change. This is denoted with an M at the end of the current part number. Please consult NTN for availability.

SERIES UCFUX

SET SCREW TYPE

Units: Millimeters
INCHES

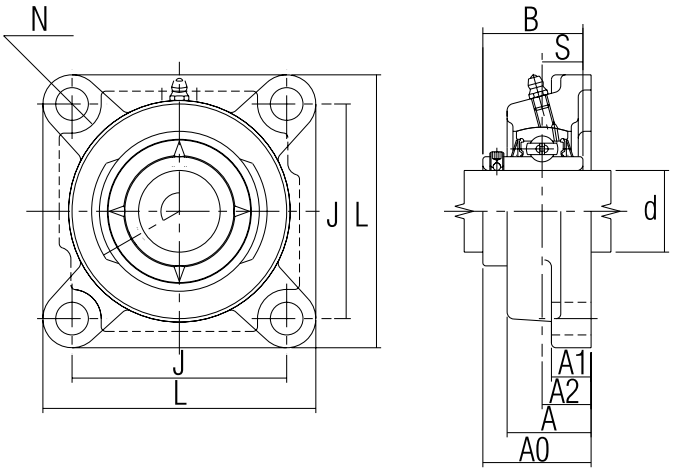

FLANGED UNITS - ULTRA CLASS CAST IRON HOUSING (4 BOLT)

Part Number	Nominal Dimensions										Lube Hole of Housing	Insert Bearing Number	Housing Number
	d	L	J	A2	A1	A	N	A0	B	S			
UCFUX-13/16	0.8125	109	82.5	20	16	33	11.5	42.1	38.1	15.9	1/8-27NPT	A-UCX05-013D1	FU206D1V50
UCFUX-7/8	0.8750	4 9/32	3 1/4	25/32	5/8	1 5/16	29/64	1 21/32	1.5000	0.626		A-UCX05-014D1	
UCFUX-15/16	0.9375											A-UCX05-015D1	
UCFUX-1	1.0000											A-UCX05-100D1	
UCFUX-1 1/16	1.0625	118	92	21	17	36	13.1	46.4	42.9	17.5	1/8-27NPT	A-UCX06-101D1	FU207D1V50
UCFUX-1 1/8	1.1250	4 21/32	3 5/8	53/64	21/32	1 13/32	33/64	1 53/64	1.6890	0.689		A-UCX06-102D1	
UCFUX-1 3/16	1.1875											A-UCX06-103D1	
UCFUX-1 1/4	1.2500											A-UCX07-104D1	
UCFUX-1 5/16	1.2500	131	101.5	24	17	39	13.1	54.3	49.2	19	1/8-27NPT	A-UCX07-105D1	FU208D1V50
UCFUX-1 3/8	1.3750	5 3/32	4	15/16	21/32	1 17/32	33/64	2 9/64	1.9370	0.748		A-UCX07-106D1	
UCFUX-1 7/16	1.4375											A-UCX07-107D1	
UCFUX-1 1/2	1.5000	137	105	24	18	40	13.1	54.3	49.2	19	1/8-27NPT	A-UCX08-108D1	FU209D1V50
UCFUX-1 9/16	1.5625	5 13/32	4 1/8	15/16	23/32	1 9/16	33/64	2 9/64	1.9370	0.748		A-UCX08-109D1	
UCFUX-1 5/8	1.6250	144	111	28	20	46	17.1	60.7	51.6	19	1/8-27NPT	A-UCX09-110D1	FU210D1V50
UCFUX-1 11/16	1.6875	5 21/32	4 3/8	1 7/64	25/32	1 13/16	43/64	2 25/64	2.0315	0.748		A-UCX09-111D1	
UCFUX-1 3/4	1.7500											A-UCX09-112D1	
UCFUX-1 13/16	1.8125											A-UCX10-113D1	
UCFUX-1 7/8	1.8750	163	130	31	21	49	17.1	64.3	55.6	22.2	1/8-27NPT	A-UCX10-114D1	FU211D1V50
UCFUX-1 15/16	1.9375	6 13/32	5 1/8	1 7/32	13/16	1 15/16	43/64	2 17/32	2.1890	0.874		A-UCX10-115D1	
UCFUX-2	2.0000											A-UCX11-200D1	
UCFUX-2 1/16	2.0000	175	143	34	21	53	17.1	73.8	65.1	25.4	1/8-27NPT	A-UCX11-201D1	FU212D1V50
UCFUX-2 1/8	2.1250	6 7/8	5 5/8	1 11/32	13/16	2 3/32	43/64	2 29/32	2.5630	1.000		A-UCX11-202D1	
UCFUX-2 3/16	2.1875											A-UCX11-203D1	
UCFUX-2 1/4	2.2500											A-UCX12-204D1	
UCFUX-2 5/16	2.3125											A-UCX12-205D1	
UCFUX-2 7/16	2.4375	193	143	38	22	62	16.3	82.6	74.6	30.2	1/8-27NPT	A-UCX14-207D1	FU214D1V50
UCFUX-2 1/2	2.5000	7 19/32	5 7/8	1 1/2	7/8	2 7/16	41/64	3 1/4	2.9370	1.189		A-UCX13-208D1	
UCFUX-2 9/16	2.5625											A-UCX13-209D1	
UCFUX-2 5/8	2.6250	200	152	41	22	65	19.8	85.3	77.8	33.3	1/8-27NPT	A-UCX14-210D1	FU215D1V50
UCFUX-2 11/16	2.6875	7 7/8	6	1 39/64	7/8	2 9/16	25/32	3 23/64	3.0630	1.311		A-UCX14-211D1	
UCFUX-2 3/4	2.7500											A-UCX14-212D1	
UCFUX-2 13/16	2.8125	200	152.5	40.9	22	65	19.8	90.5	82.6	33.3	1/8-27NPT	A-UCX15-213D1	FUX15D1V50
UCFUX-2 7/8	2.8750	7 7/8	6	1 39/64	7/8	2 9/16	25/32	3 9/16	3.2520	1.311		A-UCX15-214D1	
UCFUX-2 15/16	2.9375											A-UCX15-215D1	
UCFUX-3	3.0000											A-UCX15-300D1	

Note: Metric Sizes available. The production and shipment of black oxide coated inserts will be introduced as a rolling change. This is denoted with an M at the end of the current part number. Please consult NTN for availability.

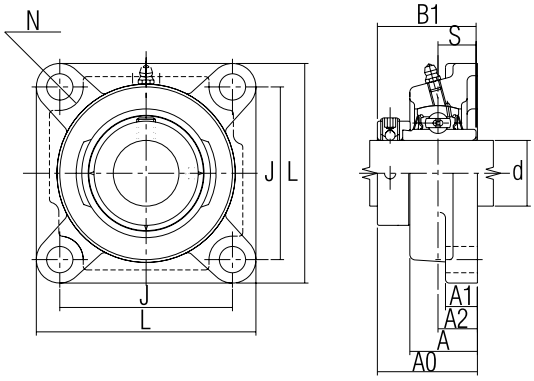

Units: Millimeters
INCHES

NTN

SERIES UELFU

ECCENTRIC LOCKING COLLAR TYPE

FLANGED UNITS - ULTRA CLASS CAST IRON HOUSING (4 BOLT)

Part Number	Nominal Dimensions										Lube Hole of Housing	Insert Bearing Number	Housing Number
	d	L	J	A2	A1	A	N	A0	B1	S			
UELFU-1/2	0.5000	76	54	17	13	28	10.7	42.1	37.3	12.4	1/4-28UNF	A-UEL201-008D1	FU201D1V50
UELFU-9/16	0.5625	3	2 1/8	21/32	1/2	1 7/64	27/64	1 21/32	1.469	0.488		A-UEL202-009D1	
UELFU-5/8	0.6250											A-UEL202-010D1	
UELFU-11/16	0.6875											A-UEL203-011D1	
UELFU-3/4	0.7500	86	63.5	19	15	29.5	10.7	45.6	43.7	17.1	1/4-28UNF	A-UEL204-012D1	FU204D1V50
		3 3/8	2 1/2	3/4	19/32	1 5/32	27/64	1 51/64	1.720	0.673			
UELFU-13/16	0.8125	96	70	19	15	30	11.5	46	44.4	17.5	1/8-27NPT	A-UEL205-013D1	FU205D1V50
UELFU-7/8	0.8750	3 25/32	2 3/4	3/4	19/32	1 3/16	29/64	1 13/16	1.748	0.689		A-UEL205-014D1	
UELFU-15/16	0.9375											A-UEL205-015D1	
UELFU-1	1.0000											A-UEL205-100D1	
UELFU-1 1/16	1.0625	109	82.5	20	16	33	11.5	50	48.4	18.3	1/8-27NPT	A-UEL206-101D1	FU206D1V50
UELFU-1 1/8	1.1250	4 9/32	3 1/4	25/32	5/8	1 5/16	29/64	1 31/32	1.906	0.720		A-UEL206-102D1	
UELFU-1 3/16	1.1875											A-UEL206-103D1	
UELFU-1 1/4S	1.2500											A-UEL206-104D1	
UELFU-1 1/4	1.2500	118	92	21	17	36	13.1	53.2	51.1	18.8	1/8-27NPT	A-UEL207-104D1	FU207D1V50
UELFU-1 5/16	1.3125	4 21/32	3 5/8	53/64	21/32	1 13/32	33/64	2 3/32	2.012	0.740		A-UEL207-105D1	
UELFU-1 3/8	1.3750											A-UEL207-106D1	
UELFU-1 7/16	1.4375											A-UEL207-107D1	
UELFU-1 1/2	1.5000	131	101.5	24	17	39	13.1	58.7	56.3	21.4	1/8-27NPT	A-UEL208-108D1	FU208D1V50
UELFU-1 9/16	1.5625	5 3/32	4	15/16	21/32	1 17/32	33/64	2 5/16	2.217	0.843		A-UEL208-109D1	
UELFU-1 5/8	1.6250	137	105	24	17	40	13.1	58.7	56.3	21.4	1/8-27NPT	A-UEL209-110D1	FU209D1V50
UELFU-1 11/16	1.6875	5 13/32	4 1/8	15/16	23/32	1 9/16	33/64	2 5/16	2.217	0.843		A-UEL209-111D1	
UELFU-1 3/4	1.7500											A-UEL209-112D1	
UELFU-1 13/16	1.8125	144	111	28	20	46	17.1	66.3	62.7	24.6	1/8-27NPT	A-UEL210-113D1	FU210D1V50
UELFU-1 7/8	1.8750	5 21/32	4 3/8	1 7/64	25/32	1 13/16	43/64	2 39/64	2.469	0.969		A-UEL210-114D1	
UELFU-1 15/16	1.9375											A-UEL210-115D1	
UELFU-2S	2.0000											A-UEL210-200D1	
UELFU-2	2.0000	163	130	31	21	49	17.1	74.6	71.4	27.8	1/8-27NPT	A-UEL211-200D1	FU211D1V50
UELFU-2 1/16	2.0625	6 13/32	5 1/8	1 7/32	13/16	1 15/16	43/64	2 15/16	2.811	1.094		A-UEL211-201D1	
UELFU-2 1/8	2.1250											A-UEL211-202D1	
UELFU-2 3/16	2.1875											A-UEL211-203D1	
UELFU-2 1/4	2.2500	175	143	34	21	53	17.1	81	77.8	31	1/8-27NPT	A-UEL212-204D1	FU212D1V50
UELFU-2 5/16	2.3125	6 7/8	5 5/8	1 11/32	13/16	2 3/32	43/64	3 3/16	3.063	1.220		A-UEL212-205D1	
UELFU-2 3/8	2.3750											A-UEL212-206D1	
UELFU-2 7/16	2.4375											A-UEL212-207D1	
UELFU-2 1/2R	2.5000	187	149	38	22	59	19	89.55	85.7	34.15	1/8-27NPT	A-UEL213-208D1M	FU213D1V50
UELFU-2 9/16R	2.5625	7 3/8	5 55/64	1 1/2	7/8	2 5/16	3/4	3 1/2	3.374	1.344		A-UEL213-209D1M	
UELFU-2 5/8R	2.6250	193	149	38	22	62	16.3	89.7	85.7	34.1	1/8-27NPT	A-UEL214-210D1	FU214D1V50
UELFU-2 11/16R	2.6875	7 19/32	5 7/8	1 1/2	7/8	2 7/16	41/64	3 17/32	3.374	1.344		A-UEL214-211D1	
UELFU-2 3/4R	2.7500											A-UEL214-212D1	
UELFU-2 13/16	2.8125	200	152	41	22	65	19.8	95.6	92	37.3	1/8-27NPT	A-UEL215-213D1	FU215D1V50
UELFU-2 7/8	2.8750	7 7/8	6	1 39/64	7/8	2 9/16	25/32	3 49/64	3.622	1.469		A-UEL215-214D1	
UELFU-2 15/16	2.9375											A-UEL215-215D1	
UELFU-3	3.0000											A-UEL215-300D1	

Note: Metric Sizes available. The production and shipment of black oxide coated inserts will be introduced as a rolling change. This is denoted with an M at the end of the current part number. Please consult NTN for availability.

SERIES ARFU

SET SCREW TYPE

Units: Millimeters
INCHES

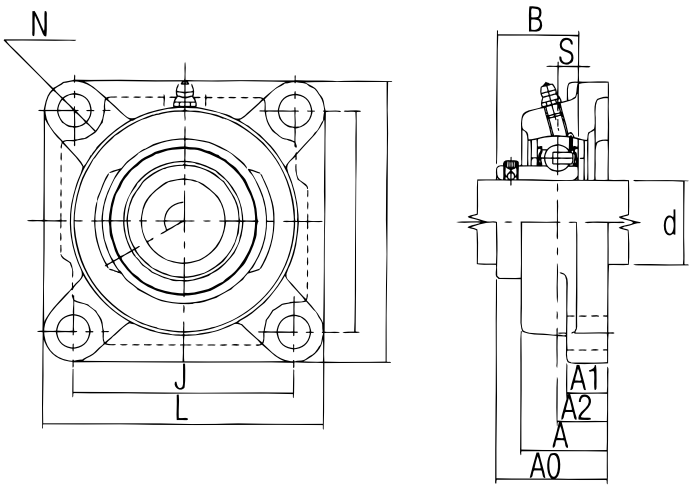

FLANGED UNITS - ULTRA CLASS CAST IRON HOUSING (4 BOLT)

Part Number	Nominal Dimensions										Lube Hole of Housing	Insert Bearing Number	Housing Number
	d	L	J	A2	A1	A	N	A0	B	S			
ARFU-1/2	0.5000	76	54	17	13	28	10.7				1/4-28UNF	A-AR201-008D1	FU201D1V50
ARFU-9/16	0.5625	3	2 1/8	21/32	1/2	1 7/64	27/64	1 19/64	0.8858	0.256		A-AR202-009D1	
ARFU-5/8	0.6250											A-AR202-010D1	
ARFU-11/16	0.6875											A-AR203-011D1	
ARFU-3/4	0.7500	86	63.5	19	15	29.5					1/4-28UNF	A-AR204-012D1	FU204D1V50
		3 3/8	2 1/2	3/4	19/32	1 5/32	27/64	1 29/64	1.0039	0.295			
ARFU-13/16	0.8125	96	70	19	15	30	11.5				1/8-27NPT	A-AR205-013D1	FU205D1V50
ARFU-7/8	0.8750	3 25/32	2 3/4	3/4	19/32	1 3/16	29/64	1 33/64	1.0630	0.295		A-AR205-014D1	
ARFU-15/16	0.9375											A-AR205-015D1	
ARFU-1	1.0000											A-AR205-100D1	
ARFU-1 1/16	1.0625	109	82.5	20	16	33	11.5				1/8-27NPT	A-AR206-101D1	FU206D1V50
ARFU-1 1/8	1.1250	4 9/32	3 1/4	25/32	5/8	1 5/16	29/64	1 39/64	1.1811	0.354		A-AR206-102D1	
ARFU-1 3/16	1.1875											A-AR206-103D1	
ARFU-1 1/4S	1.2500											A-AR206-104D1	
ARFU-1 1/4	1.2500	118	92	21	17	36	13.1				1/8-27NPT	A-AR207-104D1	FU207D1V50
ARFU-1 5/16	1.3125	4 21/32	3 5/8	53/64	21/32	1 13/32	33/64	1 53/64	1.3780	0.374		A-AR207-105D1	
ARFU-1 3/8	1.3750											A-AR207-106D1	
ARFU-1 7/16	1.4375											A-AR207-107D1	
ARFU-1 1/2	1.5000		101.5	24	17	39	13.1				1/8-27NPT	A-AR208-108D1	FU208D1V50
ARFU-1 9/16	1.5625	5 5/32	4	15/16	21/32	1 17/32	33/64	2 3/32	1.5748	0.433		A-AR208-109D1	
ARFU-1 5/8	1.6250	137	105	24	17	40	13.1				1/8-27NPT	A-AR209-110D1	FU209D1V50
ARFU-1 11/16	1.6875	5 13/32	4 1/8	15/16	23/32	1 9/16	33/64	2 9/64	1.6339	0.433		A-AR209-111D1	
ARFU-1 3/4	1.7500											A-AR209-112D1	
ARFU-1 13/16	1.8125	144	111	28	20	46	17.1				1/8-27NPT	A-AR210-113D1	FU210D1V50
ARFU-1 7/8	1.8750	5 21/32	4 3/8	1 7/64	25/32	1 13/16	43/64	2 23/64	1.6929	0.433		A-AR210-114D1	
ARFU-1 15/16	1.9375											A-AR210-115D1	
ARFU-2S	2.0000											A-AR210-200D1	
ARFU-2	2.0000	163	130	31	21	49	17.1				1/8-27NPT	A-AR211-200D1	FU211D1V50
ARFU-2 1/16	2.0625	6 13/32	5 1/8	1 7/32	13/16	1 15/16	43/64	2 7/16	1.6929	0.472		A-AR211-201D1	
ARFU-2 1/8	2.1250											A-AR211-202D1	
ARFU-2 3/16	2.1875											A-AR211-203D1	

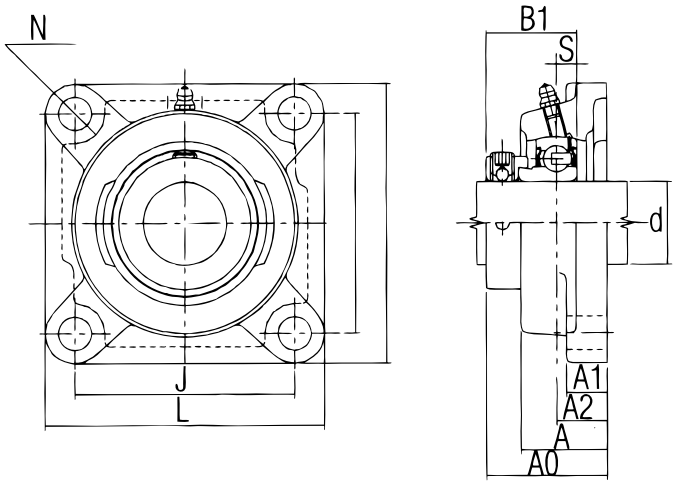

Units: Millimeters
INCHES

NTN

SERIES JELFU

ECCENTRIC LOCKING COLLAR TYPE

FLANGED UNITS - ULTRA CLASS CAST IRON HOUSING (4 BOLT)

Part Number	Nominal Dimensions										Lube Hole of Housing	Insert Bearing Number	Housing Number
	d	L	J	A2	A1	A	N	A0	B1	S			
JELFU-1/2	0.5000	76	54	17	13	28	10.7				1/4-28UNF	A-JEL201-008D1	FU201D1V50
JELFU-9/16	0.5625	3	2 1/8	21/32	1/2	1 7/64	27/64	1 35/64	1.126	0.256		A-JEL202-009D1	
JELFU-5/8	0.6250											A-JEL202-010D1	
JELFU-11/16	0.6875											A-JEL203-011D1	
JELFU-3/4	0.7500	86	63.5	19	15	29.5	11.5				1/4-28UNF	A-JEL204-012D1	FU204D1V50
		3 3/8	2 1/2	3/4	19/32	1 5/32	29/64	1 43/64	1.220	0.295			
JELFU-13/16	0.8125	96	70	19	15	30	11.5				1/8-27NPT	A-JEL205-013D1	FU205D1V50
JELFU-7/8	0.8750	3 25/32	2 3/4	3/4	19/32	1 3/16	29/64	1 43/64	1.220	0.295		A-JEL205-014D1	
JELFU-15/16	0.9375											A-JEL205-015D1	
JELFU-1	1.0000											A-JEL205-100D1	
JELFU-1 1/16	1.0625	109	82.5	20	16	33	11.5				1/8-27NPT	A-JEL206-101D1	FU206D1V50
JELFU-1 1/8	1.1250	4 9/32	3 1/4	25/32	5/8	1 5/16	29/64	1 27/32	1.406	0.354		A-JEL206-102D1	
JELFU-1 3/16	1.1875											A-JEL206-103D1	
JELFU-1 1/4S	1.2500											A-JEL206-104D1	
JELFU-1 1/4	1.2500	118	92	21	17	36	13.1				1/8-27NPT	A-JEL207-104D1	FU207D1V50
JELFU-1 5/16	1.3125	4 21/32	3 5/8	53/64	21/32	1 13/32	33/64	1 63/64	1.531	0.374		A-JEL207-105D1	
JELFU-1 3/8	1.3750											A-JEL207-106D1	
JELFU-1 7/16	1.4375											A-JEL207-107D1	
JELFU-1 1/2	1.5000		101.5	24	17	39	13.1				1/8-27NPT	A-JEL208-108D1	FU208D1V50
JELFU-1 9/16	1.5625	5 5/32	4	15/16	21/32	1 17/32	33/64	2 15/64	1.720	0.433		A-JEL208-109D1	
JELFU-1 5/8	1.6250	137	105	24	17	40	13.1				1/8-27NPT	A-JEL209-110D1	FU209D1V50
JELFU-1 11/16	1.6875	5 13/32	4 1/8	15/16	23/32	1 9/16	33/64	2 15/64	1.720	0.433		A-JEL209-111D1	
JELFU-1 3/4	1.7500											A-JEL209-112D1	
JELFU-1 13/16	1.8125	144	111	28	20	46	17.1				1/8-27NPT	A-JEL210-113D1	FU210D1V50
JELFU-1 7/8	1.8750	5 21/32	4 3/8	1 7/64	25/32	1 13/16	43/64	2 25/64	1.720	0.433		A-JEL210-114D1	
JELFU-1 15/16	1.9375											A-JEL210-115D1	
JELFU-2S	2.0000											A-JEL210-200D1	
JELFU-2	2.0000	163	130	31	21	49	17.1				1/8-27NPT	A-JEL211-200D1	FU211D1V50
JELFU-2 1/16	2.0625	6 13/32	5 1/8	1 7/32	13/16	1 15/16	43/64	2 21/32	1.906	0.472		A-JEL211-201D1	
JELFU-2 1/8	2.1250											A-JEL211-202D1	
JELFU-2 3/16	2.1875											A-JEL211-203D1	

NTN BEARING WEIGHTS

Bearing Series → **UCP SERIES**

UCP-1/2 ..... 1.5

Complete Pillow Block Number → UCP-1/2 ← Weight (lbs)

ULTRA-CLASS MOUNTED UNITS — LBS.

UCP Series

UCP-1/2	1.5
UCP-9/16	1.5
UCP-5/8	1.5
UCP-11/16	1.5
UCP-3/4	1.8
UCP-13/16	2.0
UCP-7/8	2.0
UCP-15/16	2.0
UCP-1	2.0
UCP-1.1/16	3.3
UCP-1.1/8	3.3
UCP-1.3/16	3.3
UCP-1.1/4S	3.3
UCP-1.1/4	4.0
UCP-1.5/16	4.0
UCP-1.3/8	4.0
UCP-1.7/16	4.0
UCP-1.1/2	4.9
UCP-1.9/16	4.9
UCP-1.5/8	5.7
UCP-1.11/16	5.7
UCP-1.3/4	5.5
UCP-1.13/16	7.5
UCP-1.7/8	7.3
UCP-1.15/16	7.3
UCP-2S	7.3
UCP-2	9.3
UCP-2.1/16	9.0
UCP-2.1/8	9.0
UCP-2.3/16	8.8
UCP-2.1/4	12.3
UCP-2.5/16	12.1
UCP-2.3/8	12.1
UCP-2.7/16	11.9
UCP-2.1/2	14.8
UCP-2.9/16	14.6
UCP-2.5/8R	16.5
UCP-2.11/16R	16.3
UCP-2.3/4R	16.1
UCP-2.13/16	18.7
UCP-2.7/8	18.5
UCP-2.15/16	18.3
UCP-3	18.1

UCPL Series

UCPL-1/2	1.5
UCPL-9/16	1.5
UCPL-5/8	1.5
UCPL-11/16	1.5
UCPL-3/4	1.8
UCPL-13/16	2.0
UCPL-7/8	2.0
UCPL-15/16	2.0
UCPL-1	2.0
UCPL-1.1/16	3.3
UCPL-1.1/8	3.3
UCPL-1.3/16	3.1
UCPL-1.1/4S	3.1
UCPL-1.1/4	4.0
UCPL-1.5/16	4.0
UCPL-1.3/8	4.0
UCPL-1.7/16	3.7
UCPL-1.1/2	4.9
UCPL-1.9/16	4.9
UCPL-1.5/8	5.7
UCPL-1.11/16	5.5
UCPL-1.3/4	5.5
UCPL-1.13/16	7.3
UCPL-1.7/8	7.3
UCPL-1.15/16	7.1
UCPL-2S	7.1
UCPL-2	9.0
UCPL-2.1/16	9.0
UCPL-2.1/8	8.8
UCPL-2.3/16	8.8
UCPL-2.1/4	12.3
UCPL-2.5/16	12.1
UCPL-2.3/8	11.9
UCPL-2.7/16	11.9
UCPL-2.1/2	
UCPL-2.9/16	
UCPL-2.5/8	16.1
UCPL-2.11/16	15.9
UCPL-2.3/4	19.0
UCPL-2.13/16	19.2
UCPL-2.7/8	19.0
UCPL-2.15/16	18.7
UCPL-3	18.5

UCPX Series

UCPX-13/16	3.5
UCPX-7/8	3.5
UCPX-15/16	3.5
UCPX-1	3.4
UCPX-1.1/16	4.2
UCPX-1.1/8	4.1
UCPX-1.3/16	4.1
UCPX-1.1/4	4.0
UCPX-1.5/16	5.4
UCPX-1.3/8	5.3
UCPX-1.7/16	5.2
UCPX-1.1/2	5.8
UCPX-1.9/16	5.7
UCPX-1.5/8	7.7
UCPX-1.11/16	7.7
UCPX-1.3/4	7.6
UCPX-1.13/16	7.4
UCPX-1.7/8	9.4
UCPX-1.15/16	9.3
UCPX-2	9.1
UCPX-2.1/16	12.9
UCPX-2.1/8	12.8
UCPX-2.3/16	12.6
UCPX-2.1/4	12.4
UCPX-2.7/16	16.0
UCPX-2.1/2	15.9
UCPX-2.9/16	16.7
UCPX-2.5/8	26.2
UCPX-2.11/16	26.0
UCPX-2.3/4	25.7
UCPX-2.13/16	26.0
UCPX-2.7/8	25.7
UCPX-2.15/16	25.4
UCPX-3	25.2
UCPX-3.3/16	39.4
UCPX-3.7/16	40.1
UCPX-3.1/2	39.7

ARP Series

ARP-1/2	1.5
ARP-9/16	1.5
ARP-5/8	1.5
ARP-11/16	1.5
ARP-3/4	1.5
ARP-13/16	2.0
ARP-7/8	2.0
ARP-15/16	2.0
ARP-1	2.0
ARP-1.1/16	3.3
ARP-1.1/8	3.1
ARP-1.3/16	3.1
ARP-1.1/4S	3.1
ARP-1.1/4	4.0
ARP-1.5/16	4.0
ARP-1.3/8	3.7
ARP-1.7/16	3.7
ARP-1.1/2	4.6
ARP-1.9/16	4.6
ARP-1.5/8	5.5
ARP-1.11/16	5.5
ARP-1.3/4	5.3
ARP-1.13/16	7.3
ARP-1.7/8	7.3
ARP-1.15/16	7.1
ARP-2S	7.1
ARP-2S	8.8
ARP-2.1/16	8.8
ARP-2.1/8	8.6
ARP-2.3/16	8.6

ARPL Series

ARPL-1/2	1.5
ARPL-9/16	1.5
ARPL-5/8	1.5
ARPL-11/16	1.5
ARPL-3/4	1.8
ARPL-13/16	2.0
ARPL-7/8	2.0
ARPL-15/16	2.0
ARPL-1	2.0
ARPL-1.1/16	3.1
ARPL-1.1/8	3.1
ARPL-1.3/16	3.1
ARPL-1.1/4S	3.1
ARPL-1.1/4	4.0
ARPL-1.5/16	3.7
ARPL-1.3/8	3.7
ARPL-1.7/16	3.5
ARPL-1.1/2	4.6
ARPL-1.9/16	4.6
ARPL-1.5/8	5.5
ARPL-1.11/16	5.3
ARPL-1.3/4	5.3
ARPL-1.13/16	7.1
ARPL-1.7/8	7.1
ARPL-1.15/16	6.8
ARPL-2S	6.8
ARPL-2S	8.8
ARPL-2.1/16	8.6
ARPL-2.1/8	8.6
ARPL-2.3/16	8.4

UELP Series

UELP-1/2	1.8
UELP-9/16	1.8
UELP-5/8	1.8
UELP-11/16	1.5
UELP-3/4	1.8
UELP-13/16	2.2
UELP-7/8	2.2
UELP-15/16	2.2
UELP-1	2.2
UELP-1.1/16	3.5
UELP-1.1/8	3.5
UELP-1.3/16	3.3
UELP-1.1/4S	3.3
UELP-1.1/4	4.4
UELP-1.5/16	4.4
UELP-1.3/8	4.2
UELP-1.7/16	4.2
UELP-1.1/2	5.3
UELP-1.9/16	5.3
UELP-1.5/8	6.0
UELP-1.11/16	6.0
UELP-1.3/4	6.0
UELP-1.13/16	7.9
UELP-1.7/8	7.9
UELP-1.15/16	7.7
UELP-2S	7.5
UELP-2	9.7
UELP-2.1/16	9.7
UELP-2.1/8	9.5
UELP-2.3/16	9.5
UELP-2.1/4	13.0
UELP-2.5/16	13.0
UELP-2.3/8	12.8
UELP-2.7/16	12.6
UELP-2.1/2	16.3
UELP-2.9/16	16.1
UELP-2.5/8R	17.4
UELP-2.11/16R	17.2
UELP-2.3/4R	16.9
UELP-2.13/16	19.4
UELP-2.7/8	19.2
UELP-2.15/16	19.0
UELP-3	18.5

UELPL Series

UELPL-1/2	1.8
UELPL-9/16	1.8
UELPL-5/8	1.8
UELPL-11/16	1.5
UELPL-3/4	1.8
UELPL-13/16	2.2
UELPL-7/8	2.2
UELPL-15/16	2.2
UELPL-1	2.0
UELPL-1.1/16	3.3
UELPL-1.1/8	3.3
UELPL-1.3/16	3.3
UELPL-1.1/4S	3.3
UELPL-1.1/4	4.2
UELPL-1.5/16	4.2
UELPL-1.3/8	4.2
UELPL-1.7/16	4.0
UELPL-1.1/2	5.3
UELPL-1.9/16	5.3
UELPL-1.5/8	6.0
UELPL-1.11/16	5.7
UELPL-1.3/4	5.7
UELPL-1.13/16	7.7
UELPL-1.7/8	7.7
UELPL-1.15/16	7.5
UELPL-2S	7.5
UELPL-2	9.7
UELPL-2.1/16	9.5
UELPL-2.1/8	9.5
UELPL-2.3/16	9.3
UELPL-2.1/4	13.0
UELPL-2.5/16	12.8
UELPL-2.3/8	12.8
UELPL-2.7/16	12.6
UELPL-2.1/2	
UELPL-2.9/16	
UELPL-2.5/8R	16.8
UELPL-2.11/16R	16.5
UELPL-2.3/4R	19.8
UELPL-2.13/16	19.8
UELPL-2.7/8	19.6
UELPL-2.15/16	19.4
UELPL-3	19.0

JELP Series

JELP-1/2	1.5
JELP-9/16	1.5
JELP-5/8	1.5
JELP-11/16	1.5
JELP-3/4	1.8
JELP-13/16	1.8
JELP-7/8	2.0
JELP-15/16	2.0
JELP-1	2.0
JELP-1.1/16	3.3
JELP-1.1/8	3.3
JELP-1.3/16	3.3
JELP-1.1/4S	3.3
JELP-1.1/4	4.2
JELP-1.5/16	4.2
JELP-1.3/8	4.0
JELP-1.7/16	4.0
JELP-1.1/2	4.9
JELP-1.9/16	4.9
JELP-1.5/8	6.0
JELP-1.11/16	5.7
JELP-1.3/4	5.7
JELP-1.13/16	7.5
JELP-1.7/8	7.5
JELP-1.15/16	7.3
JELP-2S	7.3
JELP-2S	9.3
JELP-2.1/16	9.3
JELP-2.1/8	9.0
JELP-2.3/16	9.0

JELPL Series

JELPL-1/2	1.5
JELPL-9/16	1.5
JELPL-5/8	1.5
JELPL-11/16	1.5
JELPL-3/4	1.8
JELPL-13/16	2.0
JELPL-7/8	2.0
JELPL-15/16	2.0
JELPL-1	2.0
JELPL-1.1/16	3.3
JELPL-1.1/8	3.1
JELPL-1.3/16	3.1
JELPL-1.1/4S	3.1
JELPL-1.1/4	4.0
JELPL-1.5/16	4.0
JELPL-1.3/8	4.0
JELPL-1.7/16	3.7
JELPL-1.1/2	4.9
JELPL-1.9/16	4.9
JELPL-1.5/8	5.7
JELPL-1.11/16	5.7
JELPL-1.3/4	5.5
JELPL-1.13/16	7.3
JELPL-1.7/8	7.3
JELPL-1.15/16	7.3
JELPL-2S	7.1
JELPL-2S	9.3
JELPL-2.1/16	9.0
JELPL-2.1/8	9.0

Continued next page …

Bearing Series → **UCP SERIES**

UCP-1/2 ..... 1.5

Complete Pillow Block Number

Weight (lbs)

NTN BEARING WEIGHTS

ULTRA-CLASS MOUNTED UNITS — LBS.

JELPL-2.3/16 ..... 8.8

UCFLU Series

UCFLU-1/2 ..... 0.9
UCFLU-9/16 ..... 0.9
UCFLU-5/8 ..... 0.9
UCFLU-11/16 ..... 0.9
UCFLU-3/4 ..... 1.3
UCFLU-13/16 ..... 1.5
UCFLU-7/8 ..... 1.5
UCFLU-15/16 ..... 1.5
UCFLU-1 ..... 1.5
UCFLU-1.1/16 ..... 2.4
UCFLU-1.1/8 ..... 2.4
UCFLU-1.3/16 ..... 2.2
UCFLU-1.1/4S 2.2
UCFLU-1.1/4 ..... 3.3
UCFLU-1.5/16 ..... 3.3
UCFLU-1.3/8 ..... 3.1
UCFLU-1.7/16 ..... 3.1
UCFLU-1.1/2 ..... 4.2
UCFLU-1.9/16 ..... 4.0
UCFLU-1.5/8 ..... 4.6
UCFLU-1.11/16 ..... 4.6
UCFLU-1.3/4 ..... 4.6
UCFLU-1.13/16 ..... 5.5
UCFLU-1.7/8 ..... 5.5
UCFLU-1.15/16 ..... 5.3
UCFLU-2S 5.3
UCFLU-2 ..... 7.7
UCFLU-2.1/16 ..... 7.7
UCFLU-2.1/8 ..... 7.5
UCFLU-2.3/16 ..... 7.5

UCFLUX Series

UCFLUX-13/16 ..... 2.4
UCFLUX-7/8 ..... 2.4
UCFLUX-15/16 ..... 2.3
UCFLUX-1 ..... 2.3
UCFLUX-1 1/16 ..... 3.4
UCFLUX-1 1/8 ..... 3.3
UCFLUX-1 3/16 ..... 3.3
UCFLUX-1 1/4 ..... 3.2
UCFLUX-1 5/16 ..... 4.3
UCFLUX-1 3/8 ..... 4.2
UCFLUX-1 7/16 ..... 4.1
UCFLUX-1 1/2 ..... 4.9
UCFLUX-1 9/16 ..... 4.8
UCFLUX-1 5/8 ..... 5.7
UCFLUX-1 11/16 ..... 5.6
UCFLUX-1 3/4 ..... 5.5
UCFLUX-1 13/16 ..... 5.4
UCFLUX-1 7/8 ..... 8.2
UCFLUX-1 15/16 ..... 8.0
UCFLUX-2 ..... 7.9

ARFLU Series

ARFLU-1/2 ..... 0.9
ARFLU-9/16 ..... 0.9
ARFLU-5/8 ..... 0.9
ARFLU-11/16 ..... 0.9
ARFLU-3/4 ..... 1.1
ARFLU-13/16 ..... 1.5
ARFLU-7/8 ..... 1.5
ARFLU-15/16 ..... 1.5
ARFLU-1 ..... 1.5
ARFLU-1.1/16 ..... 2.2
ARFLU-1.1/8 ..... 2.2
ARFLU-1.3/16 ..... 2.2
ARFLU-1.1/4S 2.2
ARFLU-1.1/4 ..... 3.3
ARFLU-1.5/16 ..... 3.1
ARFLU-1.3/8 ..... 2.9
ARFLU-1.7/16 ..... 2.9
ARFLU-1.1/2 ..... 3.7
ARFLU-1.9/16 ..... 3.7
ARFLU-1.5/8 ..... 4.4
ARFLU-1.11/16 ..... 4.4
ARFLU-1.3/4 ..... 4.4
ARFLU-1.13/16 ..... 5.3
ARFLU-1.7/8 ..... 5.3
ARFLU-1.15/16 ..... 5.1
ARFLU-2S 5.1
ARFLU-2S 7.5
ARFLU-2.1/16 ..... 7.3
ARFLU-2.1/8 ..... 7.3
ARFLU-2.3/16 ..... 7.1

UELFLU Series

UELFLU-1/2 ..... 1.1
UELFLU-9/16 ..... 1.1
UELFLU-5/8 ..... 1.1
UELFLU-11/16 ..... 0.9
UELFLU-3/4 ..... 1.3
UELFLU-13/16 ..... 1.8
UELFLU-7/8 ..... 1.8
UELFLU-15/16 ..... 1.8
UELFLU-1 ..... 1.5
UELFLU-1 1/16 ..... 2.4
UELFLU-1 1/8 ..... 2.4
UELFLU-1 3/16 ..... 2.4
UELFLU-1 1/4S 2.4
UELFLU-1 1/4 ..... 3.5
UELFLU-1 5/16 ..... 3.5
UELFLU-1 3/8 ..... 3.5
UELFLU-1 7/16 ..... 3.3
UELFLU-1 1/2 ..... 4.4
UELFLU-1 9/16 ..... 4.4
UELFLU-1 5/8 ..... 5.1
UELFLU-1 11/16 ..... 4.9
UELFLU-1 3/4 ..... 4.9
UELFLU-1 13/16 ..... 6.0
UELFLU-1 7/8 ..... 6.0
UELFLU-1 15/16 ..... 5.7
UELFLU-2S 5.7
UELFLU-2 ..... 8.4
UELFLU-2 1/16 ..... 8.2
UELFLU-2 1/8 ..... 8.2
UELFLU-2 3/16 ..... 7.9

JELFLU Series

JELFLU-1/2 ..... 0.9
JELFLU-9/16 ..... 0.9
JELFLU-5/8 ..... 0.9
JELFLU-11/16 ..... 0.9
JELFLU-3/4 ..... 1.1
JELFLU-13/16 ..... 1.5
JELFLU-7/8 ..... 1.5
JELFLU-15/16 ..... 1.5
JELFLU-1 ..... 1.5
JELFLU-1.1/16 ..... 2.4
JELFLU-1.1/8 ..... 2.2
JELFLU-1.3/16 ..... 2.2
JELFLU-1.1/4S 2.2
JELFLU-1.1/4 ..... 3.3
JELFLU-1.5/16 ..... 3.3
JELFLU-1.3/8 ..... 3.3
JELFLU-1.7/16 ..... 3.1
JELFLU-1.1/2 ..... 4.2
JELFLU-1.9/16 ..... 4.0
JELFLU-1.5/8 ..... 4.9
JELFLU-1.11/16 ..... 4.9
JELFLU-1.3/4 ..... 4.6
JELFLU-1.13/16 ..... 5.5
JELFLU-1.7/8 ..... 5.5
JELFLU-1.15/16 ..... 5.5
JELFLU-2S 5.3
JELFLU-2S 7.9
JELFLU-2.1/16 ..... 7.7
JELFLU-2.1/8 ..... 7.7
JELFLU-2.3/16 ..... 7.5

UCFU Series

UCFU-1/2 ..... 1.3
UCFU-9/16 ..... 1.3
UCFU-5/8 ..... 1.3
UCFU-11/16 ..... 1.3
UCFU-3/4 ..... 1.8
UCFU-13/16 ..... 2.0
UCFU-7/8 ..... 2.0
UCFU-15/16 ..... 2.0
UCFU-1 ..... 2.0
UCFU-1 1/16 ..... 2.9
UCFU-1 1/8 ..... 2.9
UCFU-1 3/16 ..... 2.6
UCFU-1 1/4S 2.6
UCFU-1 1/4 ..... 3.7
UCFU-1 5/16 ..... 3.7
UCFU-1 3/8 ..... 3.7
UCFU-1 7/16 ..... 3.5
UCFU-1 1/2 ..... 4.4
UCFU-1 9/16 ..... 4.4
UCFU-1 5/8 ..... 5.5
UCFU-1 11/16 ..... 5.3
UCFU-1 3/4 ..... 5.3
UCFU-1 13/16 ..... 6.2
UCFU-1 7/8 ..... 6.2
UCFU-1 15/16 ..... 6.0
UCFU-2S 6.0
UCFU-2 ..... 9.0
UCFU-2 1/16 ..... 9.0
UCFU-2 1/8 ..... 8.8
UCFU-2 3/16 ..... 8.8
UCFU-2 1/4 ..... 11.0
UCFU-2 5/16 ..... 10.8
UCFU-2 3/8 ..... 10.6
UCFU-2 7/16 ..... 10.4
UCFU-2.1/2R 12.9
UCFU-2.9/16R 12.9
UCFU-2 5/8R 13.0
UCFU-2 11/16R 12.8
UCFU-2.3/4R 14.0
UCFU-2 13/16 ..... 16.3
UCFU-2 7/8 ..... 16.1
UCFU-2 15/16 ..... 15.9
UCFU-3 ..... 15.7

UCFUX Series

UCFUX-13/16 ..... 3.0
UCFUX-7/8 ..... 2.9
UCFUX-15/16 ..... 2.9
UCFUX-1 ..... 2.8
UCFUX-1 1/16 ..... 4.3
UCFUX-1 1/8 ..... 4.2
UCFUX-1 3/16 ..... 4.2
UCFUX-1 1/4 ..... 4.1
UCFUX-1 5/16 ..... 4.9
UCFUX-1 3/8 ..... 4.8
UCFUX-1 7/16 ..... 4.7
UCFUX-1 1/2 ..... 5.5
UCFUX-1 9/16 ..... 5.4
UCFUX-1 5/8 ..... 6.7
UCFUX-1 11/16 ..... 6.7
UCFUX-1 3/4 ..... 6.6
UCFUX-1 13/16 ..... 6.4
UCFUX-1 7/8 ..... 8.6
UCFUX-1 15/16 ..... 8.5
UCFUX-2 ..... 8.4
UCFUX-2 1/16 ..... 10.5
UCFUX-2 1/8 ..... 10.4
UCFUX-2 3/16 ..... 10.3
UCFUX-2 1/4 ..... 10.0
UCFUX-2 5/16 ..... 9.9
UCFUX-2 7/16 ..... 15.0
UCFUX-2 1/2 ..... 14.9
UCFUX-2 9/16 ..... 14.7
UCFUX-2 5/8 ..... 15.7
UCFUX-2 11/16 ..... 15.5
UCFUX-2 3/4 ..... 15.3
UCFUX-2 13/16 ..... 16.4
UCFUX-2 7/8 ..... 16.1
UCFUX-2 15/16 ..... 15.9
UCFUX-3 ..... 15.6

UELFU Series

UELFU-1/2 ..... 1.5
UELFU-9/16 ..... 1.5
UELFU-5/8 ..... 1.5
UELFU-11/16 ..... 1.3
UELFU-3/4 ..... 1.8
UELFU-13/16 ..... 2.2
UELFU-7/8 ..... 2.2
UELFU-15/16 ..... 2.0
UELFU-1 ..... 2.0
UELFU-1 1/16 ..... 2.9
UELFU-1 1/8 ..... 2.9
UELFU-1 3/16 ..... 2.9
UELFU-1 1/4S 2.9
UELFU-1 1/4 ..... 4.0
UELFU-1 5/16 ..... 4.0
UELFU-1 3/8 ..... 4.0
UELFU-1 7/16 ..... 4.0
UELFU-1 1/2 ..... 4.9
UELFU-1 9/16 ..... 4.6
UELFU-1 5/8 ..... 5.7
UELFU-1 11/16 ..... 5.5
UELFU-1 3/4 ..... 5.5
UELFU-1 13/16 ..... 6.6
UELFU-1 7/8 ..... 6.6
UELFU-1 15/16 ..... 6.4
UELFU-2S 6.4
UELFU-2 ..... 9.7
UELFU-2 1/16 ..... 9.5
UELFU-2 1/8 ..... 9.5
UELFU-2 3/16 ..... 9.3
UELFU-2 1/4 ..... 11.7
UELFU-2 5/16 ..... 11.5
UELFU-2 3/8 ..... 11.2
UELFU-2 7/16 ..... 11.2
UELFU-2 1/2R 14.4
UELFU-2 9/16R 14.2
UELFU-2 5/8R 13.7
UELFU-2 11/16R 13.4
UELFU-2 3/4R 14.5
UELFU-2 13/16 ..... 17.0
UELFU-2 7/8 ..... 16.8
UELFU-2 15/16 ..... 16.5
UELFU-3 ..... 16.1

ARFU Series

ARFU-1/2 ..... 1.3
ARFU-9/16 ..... 1.3
ARFU-5/8 ..... 1.3
ARFU-11/16 ..... 1.3
ARFU-3/4 ..... 1.5
ARFU-13/16 ..... 2.0
ARFU-7/8 ..... 2.0
ARFU-15/16 ..... 2.0
ARFU-1 ..... 2.0
ARFU-1.1/16 ..... 2.6
ARFU-1.1/8 ..... 2.6
ARFU-1.3/16 ..... 2.6
ARFU-1.1/4S 2.6
ARFU-1.1/4 ..... 3.7
ARFU-1.5/16 ..... 3.5
ARFU-1.3/8 ..... 3.5
ARFU-1.7/16 ..... 3.3
ARFU-1.1/2 ..... 4.2
ARFU-1.9/16 ..... 4.0
ARFU-1.5/8 ..... 5.3
ARFU-1.11/16 ..... 5.1
ARFU-1.3/4 ..... 5.1
ARFU-1.13/16 ..... 6.0
ARFU-1.7/8 ..... 6.0
ARFU-1.15/16 ..... 5.7
ARFU-2S 5.7
ARFU-2S 8.8
ARFU-2.1/16 ..... 8.6
ARFU-2.1/8 ..... 8.6
ARFU-2.3/16 ..... 8.4

JELFU Series

JELFU-1/2 ..... 1.3
JELFU-9/16 ..... 1.3
JELFU-5/8 ..... 1.3
JELFU-11/16 ..... 1.3
JELFU-3/4 ..... 1.5
JELFU-13/16 ..... 2.0
JELFU-7/8 ..... 2.0
JELFU-15/16 ..... 2.0
JELFU-1 ..... 2.0
JELFU-1.1/16 ..... 2.9
JELFU-1.1/8 ..... 2.6
JELFU-1.3/16 ..... 2.6
JELFU-1.1/4S 2.6
JELFU-1.1/4 ..... 3.7
JELFU-1.5/16 ..... 3.7
JELFU-1.3/8 ..... 3.7
JELFU-1.7/16 ..... 3.7
JELFU-1.1/2 ..... 4.4
JELFU-1.9/16 ..... 4.4
JELFU-1.5/8 ..... 5.5
JELFU-1.11/16 ..... 5.5
JELFU-1.3/4 ..... 5.3
JELFU-1.13/16 ..... 6.2
JELFU-1.7/8 ..... 6.2
JELFU-1.15/16 ..... 6.2
JELFU-2S 6.0
JELFU-2S 9.3
JELFU-2.1/16 ..... 9.0
JELFU-2.1/8 ..... 9.0
JELFU-2.3/16 ..... 8.8

NTN

SERIES UCP2

SET SCREW TYPE

Units: Millimeters
INCHES

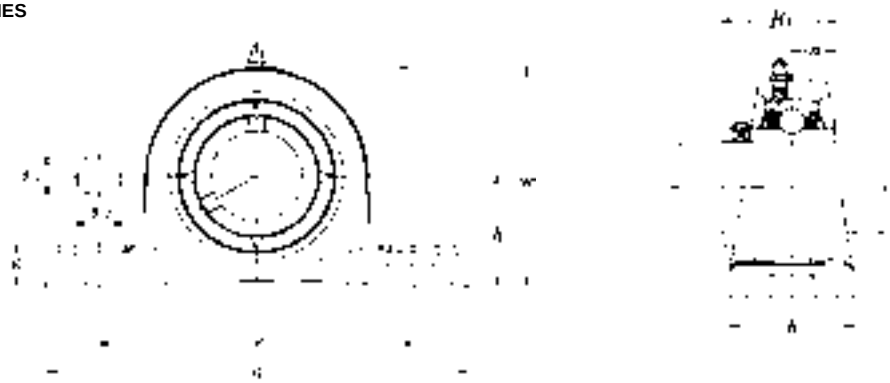

PILLOW BLOCKS - CAST HOUSING

Shaft Dia.	Complete Pillow Block Number	Nominal Dimensions										Bolt Size	Housing Number	Bearing Number	Basic Load Ratings (lbs)	
		h	*a*	*e*	*b*	s_1	s_2	*g*	*w*	*Bi*	*n*				*Dynamic C*	*Static* C_o
12 ½	UCP201D1 **UCP201-008D1**	30.2 **1 3/16**	127 **5**	95 **3 3/4**	38 **1 1/2**	13 **1/2**	16 **5/8**	14 **9/16**	62 **2 7/16**	31 **1.220**	12.7 **.500**	M10 **3/8**	P203D1 **P203D1**	UC201D1 **UC201-008D1**	**2,890**	**1,500**
15 9/16 5/8	UCP202D1 **UCP202-009D1** **UCP202-010D1**	30.2 **1 3/16**	127 **5**	95 **3 3/4**	38 **1 1/2**	13 **1/2**	16 **5/8**	14 **9/16**	62 **2 7/16**	31 **1.220**	12.7 **.500**	M10 **3/8**	P203D1 **P203D1** **P203D1**	UC202D1 **UC202-009D1** **UC202-010D1**	**2,890**	**1,500**
17 11/16	UCP203D1 **UCP203-011D1**	30.2 **1 3/16**	127 **5**	95 **3 3/4**	38 **1 1/2**	13 **1/2**	16 **5/8**	14 **9/16**	62 **2 7/16**	31 **1.220**	12.7 **.500**	M10 **3/8**	P203D1 **P203D1**	UC203D1 **UC203-011D1**	**2,890**	**1,500**
20 3/4	UCP204D1 **UCP204-012D1**	33.3 **1 5/16**	127 **5**	95 **3 3/4**	38 **1 1/2**	13 **1/2**	16 **5/8**	14 **9/16**	65 **2 9/16**	31 **1.220**	12.7 **.500**	M10 **3/8**	P204D1 **P204D1**	UC204D1 **UC204-012D1**	**2,890**	**1,500**
25 13/16 7/8 15/16 1	UCP205D1 **UCP205-013D1** **UCP205-014D1** **UCP205-015D1** **UCP205-100D1**	36.5 **1 7/16**	140 **5 1/2**	105 **4 1/8**	38 **1 1/2**	13 **1/2**	16 **5/8**	15 **19/32**	71 **2 25/32**	34 **1.339**	14.3 **.563**	M10 **3/8**	P205D1 **P205D1** **P205D1** **P205D1** **P205D1**	UC205D1 **UC205-013D1** **UC205-014D1** **UC205-015D1** **UC205-100D1**	**3,150**	**1,770**
30 1 1/16 1 1/8 1 3/16 1 1/4	UCP206D1 **UCP206-101D1** **UCP206-102D1** **UCP206-103D1** **UCP206-104D1**	42.9 **1 11/16**	165 **6 1/2**	121 **4 3/4**	48 **1 7/8**	17 **21/32**	20 **25/32**	17 **21/32**	83 **3 9/32**	38.1 **1.500**	15.9 **.626**	M14 **1/2**	P206D1 **P206D1** **P206D1** **P206D1** **P206D1**	UC206D1 **UC206-101D1** **UC206-102D1** **UC206-103D1** **UC206-104D1**	**4,400**	**2,540**
35 1 1/4 1 5/16 1 3/8 1 7/16	UCP207D1 **UCP207-104D1** **UCP207-105D1** **UCP207-106D1** **UCP207-107D1**	47.6 **1 7/8**	167 **6 9/16**	127 **5**	48 **1 7/8**	17 **21/32**	20 **25/32**	18 **23/32**	93 **3 21/32**	42.9 **1.689**	17.5 **.689**	M14 **1/2**	P207D1 **P207D1** **P207D1** **P207D1** **P207D1**	UC207D1 **UC207-104D1** **UC207-105D1** **UC207-106D1** **UC207-107D1**	**5,750**	**3,440**
40 1 1/2 1 9/16	UCP208D1 **UCP208-108D1** **UCP208-109D1**	49.2 **1 15/16**	184 **7 1/4**	137 **5 13/32**	54 **2 1/8**	17 **21/32**	20 **25/32**	18 **23/32**	98 **3 27/32**	49.2 **1.937**	19 **.748**	M14 **1/2**	P208D1 **P208D1** **P208D1**	UC208D1 **UC208-108D1** **UC208-109D1**	**6,550**	**4,000**
45 1 5/8 1 11/16 1 3/4	UCP209D1 **UCP209-110D1** **UCP209-111D1** **UCP209-112D1**	54 **2 1/8**	190 **7 15/32**	146 **5 3/4**	54 **2 1/8**	17 **21/32**	20 **25/32**	20 **25/32**	106 **4 3/16**	49.2 **1.937**	19 **.748**	M14 **1/2**	P209D1 **P209D1** **P209D1** **P209D1**	UC209D1 **UC209-110D1** **UC209-111D1** **UC209-112D1**	**7,350**	**4,590**
50 1 13/16 1 7/8 1 15/16 2	UCP210D1 **UCP210-113D1** **UCP210-114D1** **UCP210-115D1** **UCP210-200D1**	57.2 **2 1/4**	206 **8 1/8**	159 **6 1/4**	60 **2 3/8**	20 **25/32**	23 **29/32**	21 **13/16**	114 **4 1/2**	51.6 **2.031**	19 **.748**	M16 **5/8**	P210D1 **P210D1** **P210D1** **P210D1** **P210D1**	UC210D1 **UC210-113D1** **UC210-114D1** **UC210-115D1** **UC210-200D1**	**7,900**	**5,220**
55 2 2 1/16 2 1/8 2 3/16	UCP211D1 **UCP211-200D1** **UCP211-201D1** **UCP211-202D1** **UCP211-203D1**	63.5 **2 1/2**	219 **8 5/8**	171 **6 23/32**	60 **2 3/8**	20 **25/32**	23 **29/32**	23 **29/32**	126 **4 31/32**	55.6 **2.189**	22.2 **.874**	M16 **5/8**	P211D1 **P211D1** **P211D1** **P211D1** **P211D1**	UC211D1 **UC211-200D1** **UC211-201D1** **UC211-202D1** **UC211-203D1**	**9,750**	**6,570**
60 2 1/4 2 3/8 2 7/16	UCP212D1 **UCP212-204D1** **UCP212-206D1** **UCP212-207D1**	69.8 **2 3/4**	241 **9 1/2**	184 **7 1/4**	70 **2 3/4**	20 **25/32**	23 **29/32**	25 **31/32**	138 **5 7/16**	65.1 **2.563**	25.4 **1.000**	M16 **5/8**	P212D1 **P212D1** **P212D1** **P212D1**	UC212D1 **UC212-204D1** **UC212-206D1** **UC212-207D1**	**11,800**	**8,100**

Continued next page …

Units: Millimeters
INCHES

SERIES UCP2 SET SCREW TYPE

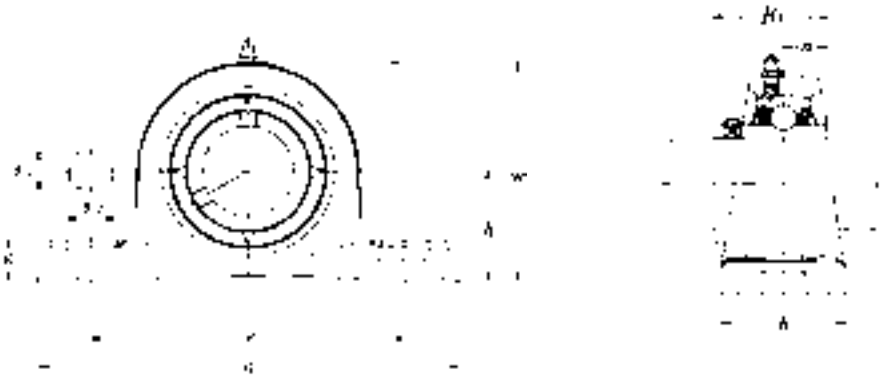

PILLOW BLOCKS - CAST HOUSING

Shaft Dia.	Complete Pillow Block Number	Nominal Dimensions										Bolt Size	Housing Number	Bearing Number	Basic Load Ratings (lbs)	
		h	a	e	b	s_1	s_2	g	w	Bi	n				Dynamic C	Static C_o
65 **2 ½**	UCP213D1 **UCP213-208D1**	76.2 **3**	265 **10 7/16**	203 **8**	70 **2 ¾**	25 **31/32**	28 **1 3/32**	27 **1 1/16**	151 **5 15/16**	65.1 **2.563**	25.4 **1.000**	M20 **¾**	P213D1 **P213D1**	UC213D1 **UC213-208D1**	**12,900**	**9,000**
70 **2 11/16** **2 ¾**	UCP214D1 **UCP214-211D1** **UCP214-212D1**	79.4 **3 ⅛**	266 **10 15/32**	210 **8 9/32**	72 **2 27/32**	25 **31/32**	28 **1 3/32**	27 **1 1/16**	157 **6 3/16**	74.6 **2.937**	30.2 **1.189**	M20 **¾**	P214D1 **P214D1** **P214D1**	UC214D1 **UC214-211D1** **UC214-211D1**	**14,000**	**9,900**
75 **2 15/16** **3**	UCP215D1 **UCP215-215D1** **UCP215-300D1**	82.6 **3 ¼**	275 **10 13/16**	217 **8 17/32**	74 **2 29/32**	25 **31/32**	28 **1 3/32**	28 **1 3/32**	163 **6 13/32**	77.8 **3.063**	33.3 **1.311**	M20 **¾**	P215D1 **P215D1** **P215D1**	UC215D1 **UC215-215D1** **UC215-300D1**	**14,900**	**11,100**
80 **3 ⅛**	UCP216D1 **UCP216-302D1**	88.9 **3 ½**	292 **11 ½**	232 **9 ⅛**	78 **3 1/16**	25 **31/32**	28 **1 3/32**	30 **1 3/16**	175 **6 ⅞**	82.6 **3.252**	33.3 **1.311**	M20 **¾**	P216D1 **P216D1**	UC216D1 **UC216-302D1**	**16,300**	**11,900**
85 **3 ¼**	UCP217D1 **UCP217-304D1**	95.2 **3 ¾**	310 **12 7/32**	247 **9 23/32**	83 **3 9/32**	25 **31/32**	28 **1 3/32**	32 **1 ¼**	187 **7 ⅜**	85.7 **3.374**	34.1 **1.343**	M20 **¾**	P217D1 **P217D1**	UC217D1 **UC217-304D1**	**18,700**	**14,400**
90 **3 ½**	UCP218D1 **UCP218-308D1**	101.6 **4**	327 **12 ⅞**	262 **10 5/16**	88 **3 15/32**	27 **1 1/16**	30 **1 3/16**	33 **1 5/16**	200 **7 ⅞**	96 **3.780**	39.7 **1.563**	M22 **⅞**	P218D1 **P218D1**	UC218D1 **UC218-308D1**	**21,600**	**16,100**

SERIES UCPL2

SET SCREW TYPE

Units: Millimeters
INCHES

PILLOW BLOCKS - CAST HOUSING (LOW CENTER HEIGHT)

Shaft Dia.	Complete Pillow Block Number	Nominal Dimensions										Bolt Size	Housing Number	Bearing Number	Basic Load Ratings (lbs)	
		h	*a*	*e*	*b*	s_1	s_2	*g*	*w*	*Bi*	*n*				*Dynamic C*	*Static* C_o
20 ¾	UCPL204D1 **UCPL204-012D1**	31.75 **1 ¼**	127 **5**	95 **3 ¾**	38 **1 ½**	13 **½**	16 **⅝**	14 **9⁄16**	64 **2 17⁄32**	31 **1.220**	12.7 **.500**	M10 **⅜**	PL204D1 **PL204D1**	UC204D1 **UC204-012D1**	**2,890**	**1,500**
25 13⁄16 ⅞ 15⁄16 1	UCPL205D1 **UCPL205-013D1** **UCPL205-014D1** **UCPL205-015D1** **UCPL205-100D1**	33.34 **1 5⁄16**	140 **5 ½**	105 **4 ⅛**	38 **1 ½**	13 **½**	16 **⅝**	15 **19⁄32**	68 **2 11⁄16**	34 **1.339**	14.3 **.563**	M10 **⅜**	PL205D1 **PL205D1** **PL205D1** **PL205D1** **PL205D1**	UC205D1 **UC205-013D1** **UC205-014D1** **UC205-015D1** **UC205-100D1**	**3,150**	**1,770**
30 1 1⁄16 1 ⅛ 1 3⁄16 1 ¼	UCPL206D1 **UCPL206-101D1** **UCPL206-102D1** **UCPL206-103D1** **UCPL206-104D1**	39.69 **1 9⁄16**	165 **6 ½**	121 **4 ¾**	48 **1 ⅞**	17 **21⁄32**	20 **25⁄32**	17 **21⁄32**	80 **3 5⁄32**	38.1 **1.500**	15.9 **.626**	M14 **½**	PL206D1 **PL206D1** **PL206D1** **PL206D1** **PL206D1**	UC206D1 **UC206-101D1** **UC206-102D1** **UC206-103D1** **UC206-104D1**	**4,400**	**2,540**
35 1 ¼ 1 5⁄16 1 ⅜ 1 7⁄16	UCPL207D1 **UCPL207-104D1** **UCPL207-105D1** **UCPL207-106D1** **UCPL207-107D1**	46.04 **1 13⁄16**	167 **6 9⁄16**	127 **5**	48 **1 ⅞**	17 **21⁄32**	20 **25⁄32**	18 **23⁄32**	91 **3 19⁄32**	42.9 **1.689**	17.5 **.689**	M14 **½**	PL207D1 **PL207D1** **PL207D1** **PL207D1** **PL207D1**	UC207D1 **UC207-104D1** **UC207-105D1** **UC207-106D1** **UC207-107D1**	**5,750**	**3,440**
45 1 ⅝ 1 11⁄16 1 ¾	UCPL209D1 **UCPL209-110D1** **UCPL209-111D1** **UCPL209-112D1**	52.39 **2 1⁄16**	190 **7 15⁄32**	146 **5 ¾**	54 **2 ⅛**	17 **21⁄32**	20 **25⁄32**	20 **25⁄32**	104 **4 3⁄32**	49.2 **1.937**	19 **.748**	M14 **½**	PL209D1 **PL209D1** **PL209D1** **PL209D1**	UC209D1 **UC209-110D1** **UC209-111D1** **UC209-112D1**	**7,350**	**4,590**
50 1 13⁄16 1 ⅞ 1 15⁄16 2	UCPL210D1 **UCPL210-113D1** **UCPL210-114D1** **UCPL210-115D1** **UCPL210-200D1**	55.56 **2 3⁄16**	206 **8 ⅛**	159 **6 ¼**	60 **2 ⅜**	20 **25⁄32**	23 **29⁄32**	21 **13⁄16**	112 **4 13⁄32**	51.6 **2.031**	19 **.748**	M16 **⅝**	PL210D1 **PL210D1** **PL210D1** **PL210D1** **PL210D1**	UC210D1 **UC210-113D1** **UC210-114D1** **UC210-115D1** **UC210-200D1**	**7,900**	**5,220**

Note: These numbers indicate relubricatable type. If maintenance free type is needed, please order without suffix D1
UCPL204 and UCPL205 have solid bases.
UCPL208 has the same dimensions as UCP208 shown on page 156

Units: Millimeters
INCHES

NTN

SERIES UCP3

SET SCREW TYPE

PILLOW BLOCKS - CAST HOUSING

Shaft Dia.	Complete Pillow Block Number	Nominal Dimensions h	a	e	b	s_1	s_2	g	w	Bi	n	Bolt Size	Housing Number	Bearing Number	Basic Load Ratings (lbs) Dynamic C	Static C_o
25 7/8 15/16 1	UCP305D1 UCP305-014D1 UCP305-015D1 UCP305-100D1	45 1 25/32	175 6 7/8	132 5 3/16	45 1 25/32	17 21/32	20 25/32	15 19/32	85 3 11/32	38 1.496	15 .591	M14 1/2	P305D1 P305D1 P305D1 P305D1	UC305D1 UC305-014D1 UC305-015D1 UC305-100D1	4,750	2,460
30 1 1/8 1 3/16	UCP306D1 UCP306-102D1 UCP306-103D1	50 1 31/32	180 7 3/32	140 5 1/2	50 1 31/32	17 21/32	20 25/32	18 23/32	95 3 3/4	43 1.693	17 .669	M14 1/2	P306D1 P306D1 P306D1	UC306D1 UC306-102D1 UC306-102D1	6,000	3,400
35 1 1/4 1 5/16 1 3/8 1 7/16	UCP307D1 UCP307-104D1 UCP307-105D1 UCP307-106D1 UCP307-107D1	56 2 7/32	210 8 9/32	160 6 5/16	56 2 7/32	17 21/32	25 31/32	20 25/32	106 4 3/16	48 1.890	19 .748	M14 1/2	P307D1 P307D1 P307D1 P307D1 P307D1	UC307D1 UC307-104D1 UC307-105D1 UC307-106D1 UC307-107D1	7,500	4,300
40 1 1/2	UCP308D1 UCP308-108D1	60 2 3/8	220 8 21/32	170 6 11/16	60 2 3/8	17 21/32	27 1 1/16	22 7/8	116 4 9/16	52 2.047	19 .748	M14 1/2	P308D1 P308D1	UC308D1 UC308-108D1	9,150	5,400
45 1 5/8 1 11/16 1 3/4	UCP309D1 UCP309-110D1 UCP309-111D1 UCP309-112D1	67 2 5/8	245 9 21/32	190 7 15/32	67 2 5/8	20 25/32	30 1 3/16	24 15/16	129 5 3/32	57 2.244	22 .866	M16 5/8	P309D1 P309D1 P309D1 P309D1	UC309D1 UC309-110D1 UC309-111D1 UC309-112D1	11,900	7,200
50 1 7/8 1 15/16	UCP310D1 UCP310-114D1 UCP310-115D1	75 2 15/16	275 10 13/16	212 8 11/32	75 2 15/16	20 25/32	35 1 3/8	27 1 1/16	143 5 5/8	61 2.402	22 .866	M16 5/8	P310D1 P310D1 P310D1	UC310D1 UC310-114D1 UC310-115D1	13,900	8,660
55 2 2 1/8 2 3/16	UCP311D1 UCP311-200D1 UCP311-202D1 UCP311-203D1	80 3 5/32	310 12 7/32	236 9 9/32	80 3 5/32	20 25/32	38 1 1/2	30 1 3/16	154 6 1/16	66 2.598	25 .984	M16 5/8	P311D1 P311D1 P311D1 P311D1	UC311D1 UC311-200D1 UC311-202D1 UC311-203D1	16,100	10,100
60 2 1/4 2 3/8 2 7/16	UCP312D1 UCP312-204D1 UCP312-206D1 UCP312-207D1	85 3 11/32	330 13	250 9 27/32	85 3 11/32	25 31/32	38 1 1/2	32 1 1/4	165 6 1/2	71 2.795	26 1.024	M20 3/4	P312D1 P312D1 P312D1 P312D1	UC312D1 UC312-204D1 UC312-206D1 UC312-207D1	18,400	11,700
65 2 1/2	UCP313D1 UCP313-208D1	90 3 17/32	340 13 3/8	260 10 1/4	90 3 17/32	25 31/32	38 1 1/2	33 1 5/16	176 6 15/16	75 2.953	30 1.181	M20 3/4	P313D1 P313D1	UC313D1 UC313-208D1	20,800	13,400
70 2 11/16 2 3/4	UCP314D1 UCP314-211D1 UCP314-212D1	95 3 3/4	360 14 3/16	280 11 1/32	90 3 17/32	27 1 1/16	40 1 9/16	35 1 3/8	187 7 3/8	78 3.071	33 1.299	M22 7/8	P314D1 P314D1 P314D1	UC314D1 UC314-211D1 UC314-212D1	23,400	15,300
75 2 15/16 3	UCP315D1 UCP315-215D1 UCP315-300D1	100 3 15/16	380 14 31/32	290 11 13/32	100 3 15/16	27 1 1/16	40 1 9/16	35 1 3/8	198 7 25/32	82 3.228	32 1.260	M22 7/8	P315D1 P315D1 P315D1	UC315D1 UC315-215D1 UC315-215D1	25,500	17,400
80 3 1/8 3 3/16	UCP316D1 UCP316-302D1 UCP316-303D1	106 4 3/16	400 15 3/4	300 11 13/16	110 4 11/32	27 1 1/16	40 1 9/16	40 1 9/16	210 8 9/32	86 3.386	34 1.339	M22 7/8	P316D1 P316D1 P316D1	UC316D1 UC316-302D1 UC316-303D1	27,600	19,500
85 3 1/4	UCP317D1 UCP317-304D1	112 4 13/32	420 16 17/32	320 12 19/32	110 4 11/32	33 1 5/16	45 1 25/32	40 1 9/16	220 8 21/32	96 3.780	40 1.575	M27 1	P317D1 P317D1	UC317D1 UC317-304D1	29,800	21,800
90 3 7/16 3 1/2	UCP318D1 UCP318-307D1 UCP318-308D1	118 4 21/32	430 16 15/16	330 13	110 4 11/32	33 1 5/16	45 1 25/32	45 1 25/32	235 9 1/4	96 3.780	40 1.575	M27 1	P318D1 P318D1 P318D1	UC318D1 UC318-307D1 UC318-308D1	32,000	24,100
95 3 3/4	UCP319D1 UCP319-312D1	125 4 29/32	470 18 1/2	360 14 3/16	120 4 23/32	36 1 13/32	50 1 31/32	45 1 25/32	250 9 27/32	103 4.055	41 1.614	M30 1 1/8	P319D1 P319D1	UC319D1 UC319-312D1	34,500	26,600
100 3 15/16 4	UCP320D1 UCP320-315D1 UCP320-400D1	140 5 1/2	490 19 9/32	380 14 31/32	120 4 23/32	36 1 13/32	50 1 31/32	50 1 31/32	275 10 13/16	108 4.252	42 1.654	M30 1 1/8	P320D1 P320D1 P320D1	UC320D1 UC320-315D1 UC320-400D1	39,000	31,500
105	UCP321D1	140	490	380	120	36	50	50	280	112	44	M30	P321D1	UC321D1	41,400	34,500
110	UCP322D1	150	520	400	140	40	55	55	300	117	46	M33	P322D1	UC322D1	46,100	40,500
120	UCP324D1	160	570	450	140	40	55	65	320	126	51	M33	P324D1	UC324D1	46,600	41,500
130	UCP326D1	180	600	480	140	40	55	75	355	135	54	M33	P326D1	UC326D1	51,500	48,000
140	UCP328D1	200	620	500	140	40	55	75	390	145	59	M33	P328D1	UC328D1	56,900	55,500

SERIES UCPX

SET SCREW TYPE

Units: Millimeters
INCHES

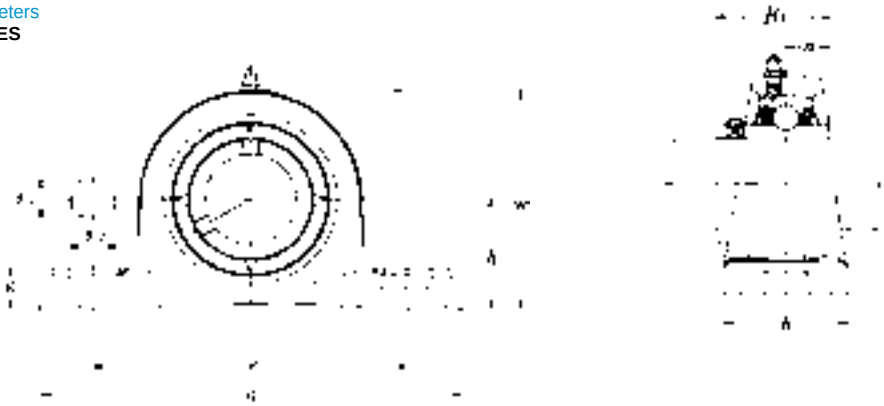

PILLOW BLOCKS - CAST HOUSING

Shaft Dia.	Complete Pillow Block Number	Nominal Dimensions h	a	e	b	s_1	s_2	g	w	Bi	n	Bolt Size	Housing Number	Bearing Number	Basic Load Ratings (lbs) Dynamic C	Static C_o
25	UCPX05D1	44.4	159	119	51	17	20	18	85	38.1	15.9	M14	PX05D1	UCX05D1	4,390	2,540
13/16	UCPX05-013D1	1 3/4	6 1/4	4 11/16	2	21/32	25/32	23/32	3 11/32	1.500	0.626	1/2	PX05D1	UCX05-013D1		
7/8	UCPX05-014D1												PX05D1	UCX05-014D1		
15/16	UCPX05-015D1												PX05D1	UCX05-015D1		
1	UCPX05-100D1												PX05D1	UCX05-100D1		
30	UCPX06D1	47.6	175	127	57	17	20	20	93	42.9	17.5	M14	PX06D1	UCX06D1	5,780	3,440
1 1/16	UCPX06-101D1	1 7/8	6 7/8	5	2 1/4	21/32	25/32	25/32	3 21/32	1.689	0.689	1/2	PX06D1	UCX06-101D1		
1 1/8	UCPX06-102D1												PX06D1	UCX06-102D1		
1 3/16	UCPX06-103D1												PX06D1	UCX06-103D1		
1 1/4	UCPX06-104D1												PX06D1	UC207-104D1		
35	UCPX07D1	54	203	144	57	17	20	21	105	49.2	19	M14	PX07D1	UCX07D1	6,550	4,000
1 5/16	UCPX07-105D1	2 1/8	8	5 21/32	2 1/4	21/32	25/32	13/16	4 1/8	1.937	0.748	1/2	PX07D1	UCX07-105D1		
1 3/8	UCPX07-106D1												PX07D1	UCX07-106D1		
1 7/16	UCPX07-107D1												PX07D1	UCX07-107D1		
40	UCPX08D1	58.7	222	156	67	20	23	26	111	49.2	19	M16	PX08D1	UCX08D1	7,310	4,590
1 1/2	UCPX08-108D1	2 5/16	8 3/4	6 5/32	2 5/8	25/32	29/32	1 1/32	4 3/8	1.937	0.748	5/8	PX08D1	UCX08-108D1		
1 9/16	UCPX08-109D1												PX08D1	UCX08-109D1		
45	UCPX09D1	58.7	222	156	67	20	23	26	116	51.6	19	M16	PX09D1	UCX09D1	7,870	5,220
1 5/8	UCPX09-110D1	2 5/16	8 3/4	6 5/32	2 5/8	25/32	29/32	1 1/32	4 9/16	2.031	0.748	5/8	PX09D1	UCX09-110D1		
1 11/16	UCPX09-111D1												PX09D1	UCX09-111D1		
1 3/4	UCPX09-112D1												PX09D1	UCX09-112D1		
1 13/16	UCPX09-113D1												PX09D1	UC210-113D1		
50	UCPX10D1	63.5	241	171	73	20	23	27	126	55.6	22.2	M16	PX10D1	UCX10D1	9,780	6,570
1 7/8	UCPX10-114D1	2 1/2	9 1/2	6 23/32	2 7/8	25/32	29/32	1 1/16	4 31/32	2.189	0.874	5/8	PX10D1	UCX10-114D1		
1 15/16	UCPX10-115D1												PX10D1	UCX10-115D1		
2	UCPX10-200D1												PX10D1	UC211-200D1		
55	UCPX11D1	69.8	260	184	79	25	28	30	137	65.1	25.4	M20	PX11D1	UCX11D1	11,810	8,100
2 1/16	UCPX11-201D1	2 3/4	10 1/4	7 1/4	3 1/8	31/32	1 3/32	1 3/16	5 13/32	2.563	1.000	3/4	PX11D1	UCX11-201D1		
2 1/8	UCPX11-202D1												PX11D1	UCX11-202D1		
2 3/16	UCPX11-203D1												PX11D1	UCX11-203D1		
2 1/4	UCPX11-204D1												PX11D1	UC212-204D1		
2 5/16	UCPX11-205D1												PX11D1	UC212-205D1		
60	UCPX12D1	76.2	286	203	83	25	28	33	151	65.1	25.4	M20	PX12D1	UCX12D1	12,930	9,000
2 3/8	UCPX12-206D1	3	11 1/4	8	3 9/32	31/32	1 3/32	1 5/16	5 15/16	2.563	1.000	3/4	PX12D1	UCX12-206D1		
2 7/16	UCPX12-207D1												PX12D1	UCX12-207D1		
65	UCPX13D1	76.2	286	203	83	25	28	33	154	74.6	30.2	M20	PX13D1	UCX13D1	13,940	9,900
2 1/2	UCPX13-208D1	3	11 1/4	8	3 9/32	31/32	1 3/32	1 5/16	6 1/16	2.937	1.189	3/4	PX13D1	UCX13-208D1		
2 9/16	UCPX13-209D1												PX13D1	UCX13-209D1		
70	UCPX14D1	88.9	330	229	89	27	30	35	170	77.8	33.3	M22	PX14D1	UCX14D1	14,840	11,130
2 5/8	UCPX14-210D1	3 1/2	13	9 1/32	3 1/2	1 1/16	1 3/16	1 3/8	6 11/16	3.063	1.311	7/8	PX14D1	UCX14-210D1		
2 11/16	UCPX14-211D1												PX14D1	UCX14-211D1		
2 3/4	UCPX14-212D1												PX14D1	UCX14-212D1		
75	UCPX15D1	88.9	330	229	89	27	30	35	175	82.6	33.3	M22	PX15D1	UCX15D1	16,310	11,920
2 13/16	UCPX15-213D1	3 1/2	13	9 1/32	3 1/2	1 1/16	1 3/16	1 3/8	6 7/8	3.252	1.311	7/8	PX15D1	UCX15-213D1		
2 7/8	UCPX15-214D1												PX15D1	UCX15-214D1		
2 15/16	UCPX15-215D1												PX15D1	UCX15-215D1		
3	UCPX15-300D1												PX15D1	UCX15-300D1		

Continued next page …

Units: Millimeters
INCHES

NTN

SERIES UCPX

SET SCREW TYPE

PILLOW BLOCKS - CAST HOUSING

Shaft Dia.	Complete Pillow Block Number	Nominal Dimensions										Bolt Size	Housing Number	Bearing Number	Basic Load Ratings (lbs)	
		h	a	e	b	s_1	s_2	g	w	Bi	n				Dynamic C	Static C_o
80 **3 1/8** **3 3/16** **3 1/4**	UCPX16D1 **UCPX16-302D1** **UCPX16-303D1** **UCPX16-304D1**	101.6 **4**	381 **15**	283 **11 5/32**	102 **4 1/32**	27 **1 1/16**	30 **1 3/16**	40 **1 9/16**	194 **7 5/8**	85.7 **3.374**	34.1 **1.343**	M22 **7/8**	PX16D1 **PX16D1** **PX16D1** **PX16D1**	UCX16D1 **UCX16-302D1** **UCX16-303D1** **UC217-304D1**	**18,780**	**14,390**
85 **3 5/16** **3 7/16**	UCPX17D1 **UCPX17-305D1** **UCPX17-307D1**	101.6 **4**	381 **15**	283 **11 5/32**	102 **4 1/32**	27 **1 1/16**	30 **1 3/16**	40 **1 9/16**	200 **7 7/8**	96 **3.780**	39.7 **1.563**	M22 **7/8**	PX17D1 **PX17D1** **PX17D1**	UCX17D1 **UCX17-305D1** **UCX17-307D1**	**21,590**	**16,080**
90 **3 1/2**	UCPX18D1 **UCPX18-308D1**	101.6 **4**	381 **15**	283 **11 5/32**	111 **4 3/8**	27 **1 1/16**	30 **1 3/16**	40 **1 9/16**	206 **8 1/8**	104 **4.094**	42.9 **1.689**	M22 **7/8**	PX18D1 **PX18D1**	UCX18D1 **UCX18-308D1**	**24,520**	**18,440**
100 **3 7/8** **3 15/16** **4**	UCPX20D1 **UCPX20-314D1** **UCPX20-315D1** **UCPX20-400D1**	127 **5**	432 **17**	337 **13 9/32**	121 **4 3/4**	33 **1 5/16**	36 **1 13/32**	45 **1 25/32**	244 **9 19/32**	117.5 **4.626**	49.2 **1.937**	M27 **1**	PX20D1 **PX20D1** **PX20D1** **PX20D1**	UCX20D1 **UCX20-314D1** **UCX20-315D1** **UCX20-400D1**	**29,910**	**23,620**

SERIES ASPL2

SET SCREW TYPE

Units: Millimeters
INCHES

PILLOW BLOCKS - CAST HOUSING (LOW CENTER HEIGHT)

Shaft Dia.	Complete Pillow Block Number	Nominal Dimensions h	a	e	b	s_1	s_2	g	w	Bi	n	Bolt Size	Housing Number	Bearing Number	Basic Load Ratings (lbs) Dynamic C	Static C_o
12 ½	ASPL201 **ASPL201-008**	26.99 **1 1/16**	121 **4 3/4**	89 **3 1/2**	35 **1 3/8**	11 **7/16**	14 **9/16**	13 **1/2**	54 **2 1/8**	22 **.866**	6 **.236**	M10 **3/8**	PL201 **PL201**	AS201 **AS201-008**	**2,160**	**1,040**
15 9/16 5/8	ASPL202 **ASPL202-009** **ASPL202-010**	26.99 **1 1/16**	121 **4 3/4**	89 **3 1/2**	35 **1 3/8**	11 **7/16**	14 **9/16**	13 **1/2**	54 **2 1/8**	22 **.866**	6 **.236**	M10 **3/8**	PL201 **PL201** **PL201**	AS202 **AS202-009** **AS202-010**	**2,160**	**1,040**
17 11/16	ASPL203 **ASPL203-011**	26.99 **1 1/16**	121 **4 3/4**	89 **3 1/2**	35 **1 3/8**	11 **7/16**	14 **9/16**	13 **1/2**	54 **2 1/8**	22 **.866**	6 **.236**	M10 **3/8**	PL201 **PL201**	AS203 **AS203-011**	**2,160**	**1,040**
20 3/4	ASPL204 **ASPL204-012**	31.75 **1 1/4**	127 **5**	95 **3 3/4**	38 **1 1/2**	13 **1/2**	16 **5/8**	14 **9/16**	64 **2 17/32**	25 **.984**	7 **.276**	M10 **3/8**	PL204 **PL204**	AS204 **AS204-012**	**2,890**	**1,500**
25 13/16 7/8 15/16 1	ASPL205 **ASPL205-013** **ASPL205-014** **ASPL205-015** **ASPL205-100**	33.34 **1 5/16**	140 **5 1/2**	105 **4 1/8**	38 **1 1/2**	13 **1/2**	16 **5/8**	15 **19/32**	68 **2 11/16**	27 **1.063**	7.5 **.295**	M10 **3/8**	PL205 **PL205** **PL205** **PL205** **PL205**	AS205 **AS205-013** **AS205-014** **AS205-015** **AS205-100**	**3,150**	**1,770**
30 1 1/16 1 1/8 1 3/16 1 1/4	ASPL206 **ASPL206-101** **ASPL206-102** **ASPL206-103** **ASPL206-104**	39.69 **1 9/16**	165 **6 1/2**	121 **4 3/4**	48 **1 7/8**	17 **21/32**	20 **25/32**	17 **21/32**	80 **3 5/32**	29 **1.142**	8 **.315**	M14 **1/2**	PL206 **PL206** **PL206** **PL206** **PL206**	AS206 **AS206-101** **AS206-102** **AS206-103** **AS206-104**	**4,400**	**2,540**
35 1 1/4 1 5/16 1 3/8 1 7/16	ASPL207 **ASPL207-104** **ASPL207-105** **ASPL207-106** **ASPL207-107**	46.04 **1 13/16**	167 **6 9/16**	127 **5**	48 **1 7/8**	17 **21/32**	20 **25/32**	18 **23/32**	91 **3 19/32**	34 **1.339**	8.5 **.335**	M14 **1/2**	PL207 **PL207** **PL207** **PL207** **PL207**	AS207 **AS207-104** **AS207-105** **AS207-106** **AS207-107**	**5,750**	**3,440**

Note: ASPL201 - ASPL205 have a solid base

Units: Millimeters
INCHES

SERIES ASPP2

SET SCREW TYPE

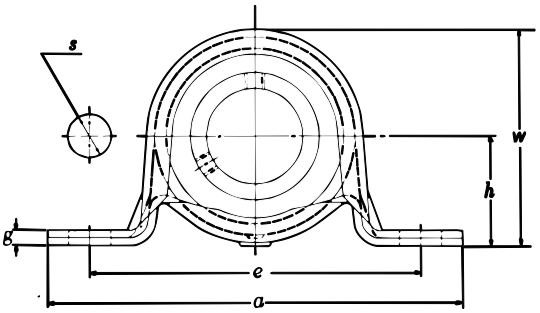

PILLOW BLOCKS - PRESSED STEEL HOUSING

Shaft Dia.	Complete Pillow Block Number	Nominal Dimensions h	a	e	b	s	g	w	Bi	n	Bolt Size	Housing Number	Bearing Number	Basic Load Ratings (lbs) Dynamic C	Static C_o	Max. Radial Load (lbs)
12 ½	ASPP201 **ASPP201-008**	22.2 ⅞	86 3 ⅜	68 2 11/16	25 3 1/32	9.5 ⅜	3.2 .126	43.8 1 23/32	22 .866	6 .236	M8 5/16	PP203 **PP203**	AS201 **AS201-008**	**2,160**	**1,040**	**440**
15 9/16 ⅝	ASPP202 **ASPP202-009** **ASPP202-010**	22.2 ⅞	86 3 ⅜	68 2 11/16	25 31/32	9.5 ⅜	3.2 .126	43.8 1 23/32	22 .866	6 .236	M8 5/16	PP203 **PP203** **PP203**	AS202 **AS202-009** **AS202-010**	**2,160**	**1,040**	**440**
17 11/16	ASPP203 **ASPP203-011**	22.2 ⅞	86 3 ⅜	68 2 11/16	25 31/32	9.5 ⅜	3.2 .126	43.8 1 23/32	22 .866	6 .236	M8 5/16	PP203 **PP203**	AS203 **AS203-011**	**2,160**	**1,040**	**440**
20 ¾	ASPP204 **ASPP204-012**	25.4 1	98 3 27/32	76 3	32 1 ¼	9.5 ⅜	3.2 .126	50.5 2	25 .984	7 .276	M8 5/16	PP204 **PP204**	AS204 **AS204-012**	**2,890**	**1,500**	**550**
25 13/16 ⅞ 15/16 1	ASPP205 **ASPP205-013** **ASPP205-014** **ASPP205-015** **ASPP205-100**	28.6 1 ⅛	108 4 ¼	86 3 ⅜	32 1 ¼	11 7/16	4 .157	56.6 2 7/32	27 1.063	7.5 .295	M10 ⅜	PP205 **PP205** **PP205** **PP205** **PP205**	AS205 **AS205-013** **AS205-014** **AS205-015** **AS205-100**	**3,150**	**1,770**	**770**
30 1 1/16 1 ⅛ 1 3/16 1 ¼	ASPP206 **ASPP206-101** **ASPP206-102** **ASPP206-103** **ASPP206-104**	33.3 1 5/16	117 4 19/32	95 3 ¾	38 1 ½	11 7/16	4 .157	66.3 2 ⅝	29 1.142	8 .315	M10 ⅜	PP206 **PP206** **PP206** **PP206** **PP206**	AS206 **AS206-101** **AS206-102** **AS206-103** **AS206-104**	**4,400**	**2,540**	**880**
35 1 ¼ 1 5/16 1 ⅜ 1 7/16	ASPP207 **ASPP207-104** **ASPP207-105** **ASPP207-106** **ASPP207-107**	39.7 1 9/16	129 5 3/32	106 4 3/16	42 1 21/32	11 7/16	4.6 .181	78 3 1/16	34 1.339	8.5 .335	M10 ⅜	PP207 **PP207** **PP207** **PP207** **PP207**	AS207 **AS207-104** **AS207-105** **AS207-106** **AS207-107**	**5,750**	**3,440**	**990**

Axial load should be less than 1/3 of radial load.

NTN

SERIES UELP2

ECCENTRIC LOCKING COLLAR TYPE

Units: Millimeters
INCHES

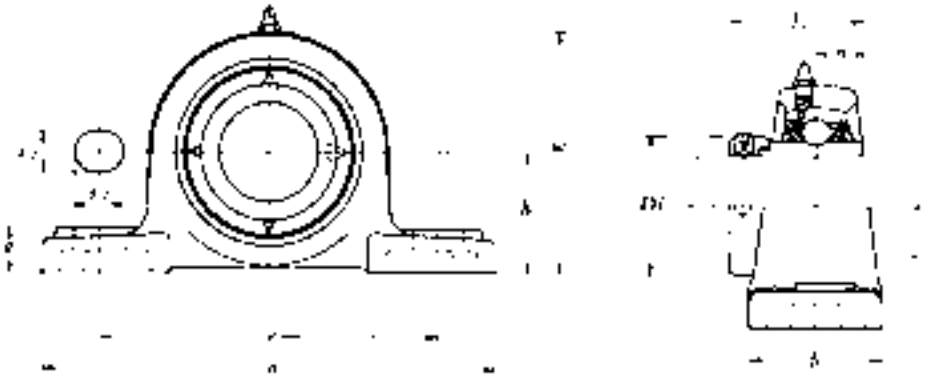

PILLOW BLOCKS - CAST HOUSING

Shaft Dia.	Complete Pillow Block Number	Nominal Dimensions											Bolt Size	Housing Number	Bearing Number	Basic Load Ratings (lbs)	
		h	*a*	*e*	*b*	s_1	s_2	*g*	*w*	*Di*	*L*	*n*				*Dynamic* *C*	*Static* C_o
20 ¾	UELP204D1 **UELP204-012D1**	33.3 **1 5/16**	127 **5**	95 **3 ¾**	38 **1 ½**	13 **½**	16 **⅝**	14 **9/16**	65 **2 9/16**	33.3 **1.31**	43.7 **1.720**	17.1 **.673**	M10 **⅜**	P204D1 **P204D1**	UEL204D1 **UEL204-012D1**	**2,890**	**1,500**
25 13/16 ⅞ 15/16 1	UELP205D1 **UELP205-013D1** **UELP205-014D1** **UELP205-015D1** **UELP205-100D1**	36.5 **1 7/16**	140 **5 ½**	105 **4 ⅛**	38 **1 ½**	13 **½**	16 **⅝**	15 **19/32**	71 **2 25/32**	38.1 **1.50**	44.4 **1.748**	17.5 **.689**	M10 **⅜**	P205D1 **P205D1** **P205D1** **P205D1** **P205D1**	UEL205D1 **UEL205-013D1** **UEL205-014D1** **UEL205-015D1** **UEL205-100D1**	**3,150**	**1,770**
30 1 1/16 1 ⅛ 1 3/16 1 ¼	UELP206D1 **UELP206-101D1** **UELP206-102D1** **UELP206-103D1** **UELP206-104D1**	42.9 **1 11/16**	165 **6 ½**	121 **4 ¾**	48 **1 ⅞**	17 **21/32**	20 **25/32**	17 **21/32**	83 **3 9/32**	44.5 **1.75**	48.4 **1.906**	18.3 **.720**	M14 **½**	P206D1 **P206D1** **P206D1** **P206D1** **P206D1**	UEL206D1 **UEL206-101D1** **UEL206-102D1** **UEL206-103D1** **UEL206-104D1**	**4,400**	**2,540**
35 1 ¼ 1 5/16 1 ⅜ 1 7/16	UELP207D1 **UELP207-104D1** **UELP207-105D1** **UELP207-106D1** **UELP207-107D1**	47.6 **1 ⅞**	167 **6 9/16**	127 **5**	48 **1 ⅞**	17 **21/32**	20 **25/32**	18 **23/32**	93 **3 21/32**	55.6 **2.19**	51.1 **2.012**	18.8 **.740**	M14 **½**	P207D1 **P207D1** **P207D1** **P207D1** **P207D1**	UEL207D1 **UEL207-104D1** **UEL207-105D1** **UEL207-106D1** **UEL207-107D1**	**5,750**	**3,440**
40 1 ½ 1 9/16	UELP208D1 **UELP208-108D1** **UELP208-109D1**	49.2 **1 15/16**	184 **7 ¼**	137 **5 13/32**	54 **2 ⅛**	17 **21/32**	20 **25/32**	18 **23/32**	98 **3 27/32**	60.2 **2.37**	56.3 **2.217**	21.4 **.843**	M14 **½**	P208D1 **P208D1** **P208D1**	UEL208D1 **UEL208-108D1** **UEL208-109D1**	**6,550**	**4,000**
45 1 ⅝ 1 11/16 1 ¾	UELP209D1 **UELP209-110D1** **UELP209-111D1** **UELP209-112D1**	54 **2 ⅛**	190 **7 15/32**	146 **5 ¾**	54 **2 ⅛**	17 **21/32**	20 **25/32**	20 **25/32**	106 **4 3/16**	63.5 **2.50**	56.3 **2.217**	21.4 **.843**	M14 **½**	P209D1 **P209D1** **P209D1** **P209D1**	UEL209D1 **UEL209-110D1** **UEL209-111D1** **UEL209-112D1**	**7,350**	**4,590**
50 1 13/16 1 ⅞ 1 15/16 2	UELP210D1 **UELP210-113D1** **UELP210-114D1** **UELP210-115D1** **UELP210-200D1**	57.2 **2 ¼**	206 **8 ⅛**	159 **6 ¼**	60 **2 ⅜**	20 **25/32**	23 **29/32**	21 **13/16**	114 **4 ½**	69.9 **2.75**	62.7 **2.469**	24.6 **.969**	M16 **⅝**	P210D1 **P210D1** **P210D1** **P210D1** **P210D1**	UEL210D1 **UEL210-113D1** **UEL210-114D1** **UEL210-115D1** **UEL210-200D1**	**7,900**	**5,220**
55 2 2 1/16 2 ⅛ 2 3/16	UELP211D1 **UELP211-200D1** **UELP211-201D1** **UELP211-202D1** **UELP211-203D1**	63.5 **2 ½**	219 **8 ⅝**	171 **6 23/32**	60 **2 ⅜**	20 **25/32**	23 **29/32**	23 **29/32**	126 **4 31/32**	76.2 **3.00**	71.4 **2.811**	27.8 **1.094**	M16 **⅝**	P211D1 **P211D1** **P211D1** **P211D1** **P211D1**	UEL211D1 **UEL211-200D1** **UEL211-201D1** **UEL211-202D1** **UEL211-203D1**	**9,750**	**6,570**
60 2 ¼ 2 ⅜ 2 7/16	UELP212D1 **UELP212-204D1** **UELP212-206D1** **UELP212-207D1**	69.8 **2 ¾**	241 **9 ½**	184 **7 ¼**	70 **2 ¾**	20 **25/32**	23 **29/32**	25 **31/32**	138 **5 7/16**	84.1 **3.31**	77.8 **3.063**	31 **1.220**	M16 **⅝**	P212D1 **P212D1** **P212D1** **P212D1**	UEL212D1 **UEL212-204D1** **UEL212-206D1** **UEL212-207D1**	**11,800**	**8,100**
65 2 ½	UELP213D1 **UELP213-208D1**	76.2 **3**	265 **10 7/16**	203 **8**	70 **2 ¾**	25 **31/32**	28 **1 3/32**	27 **1 1/16**	151 **5 15/16**	97.0 **3.82**	85.7 **3.374**	34.15 **1.344**	M20 **¾**	P213D1 **P213D1**	UEL213D1 **UEL213-208D1**	**12,900**	**9,000**
70 2 11/16 2 ¾	UELP214D1 **UELP214-211D1** **UELP214-212D1**	79.4 **3 ⅛**	266 **10 15/32**	210 **8 9/32**	72 **2 27/32**	25 **31/32**	28 **1 3/32**	27 **1 1/16**	157 **6 3/16**	97.0 **3.82**	85.7 **3.374**	34.15 **1.344**	M20 **¾**	P214D1 **P214D1** **P214D1**	UEL214D1 **UEL214-211D1** **UEL214-212D1**	**14,000**	**9,900**
75 2 15/16 3	UELP215D1 **UELP215-215D1** **UELP215-300D1**	82.6 **3 ¼**	275 **10 13/16**	217 **8 17/32**	74 **2 29/32**	25 **31/32**	28 **1 3/32**	28 **1 3/32**	163 **6 13/32**	97.0 **3.82**	92 **3.622**	37.3 **1.469**	M20 **¾**	P215D1 **P215D1** **P215D1**	UEL215D1 **UEL215-215D1** **UEL215-300D1**	**14,900**	**11,130**

Units: Millimeters
INCHES

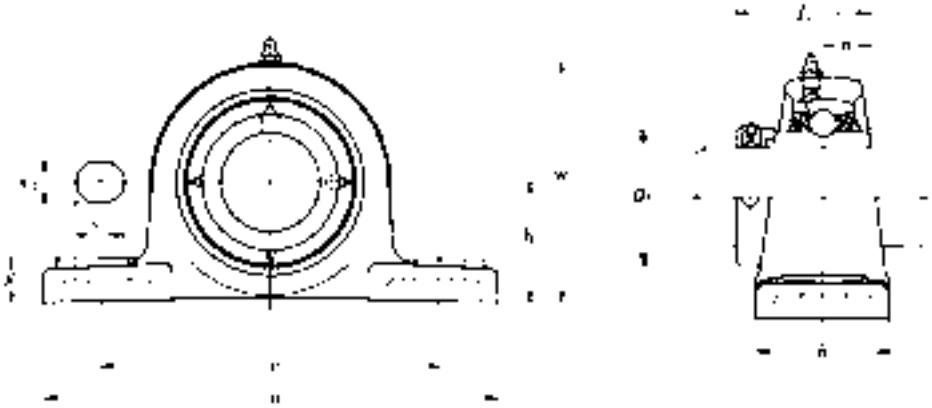

NTN

SERIES UELPL2

ECCENTRIC LOCKING COLLAR TYPE

PILLOW BLOCKS - CAST HOUSING (LOW CENTER HEIGHT)

Shaft Dia.	Complete Pillow Block Number	Nominal Dimensions h	a	e	b	s_1	s_2	g	w	Di	L	n	Bolt Size	Housing Number	Bearing Number	Basic Load Ratings (lbs) Dynamic C	Static C_o
20	UELPL204D1	31.75	127	95	38	13	16	14	64	33.3	43.7	17.1	M10	PL204D1	UEL204D1	**2,890**	**1,500**
¾	**UELPL204-012D1**	1 ¼	**5**	3 ¾	1 ½	½	⅝	9/16	2 17/32	**1.31**	**1.920**	**.673**	⅜	**PL204D1**	**UEL204-012D1**		
25	UELPL205D1	33.34	140	105	38	13	16	15	68	38.1	44.4	17.5	M10	PL205D1	UEL205D1	**3,150**	**1,770**
13/16	**UELPL205-013D1**	1 5/16	5 ½	4 ⅛	1 ½	½	⅝	19/32	2 11/16	**1.50**	**1.748**	**.689**	⅜	**PL205D1**	**UEL205-013D1**		
⅞	**UELPL205-014D1**													**PL205D1**	**UEL205-014D1**		
15/16	**UELPL205-015D1**													**PL205D1**	**UEL205-015D1**		
1	**UELPL205-100D1**													**PL205D1**	**UEL205-100D1**		
30	UELPL206D1	39.69	165	121	48	17	20	17	80	44.5	48.4	18.3	M14	PL206D1	UEL206D1	**4,400**	**2,540**
1 1/16	**UELPL206-101D1**	1 9/16	6 ½	4 ¾	1 ⅞	21/32	25/32	21/32	3 5/32	**1.75**	**1.906**	**.720**	½	**PL206D1**	**UEL206-101D1**		
1 ⅛	**UELPL206-102D1**													**PL206D1**	**UEL206-102D1**		
1 3/16	**UELPL206-103D1**													**PL206D1**	**UEL206-103D1**		
1 ¼	**UELPL206-104D1**													**PL206D1**	**UEL206-104D1**		
35	UELPL207D1	46.04	167	127	48	17	20	18	91	55.6	51.1	18.8	M14	PL207D1	UEL207D1	**5,750**	**3,440**
1 ¼	**UELPL207-104D1**	1 13/16	6 9/16	**5**	1 ⅞	21/32	25/32	23/32	3 19/32	**2.19**	**2.012**	**.740**	½	**PL207D1**	**UEL207-104D1**		
1 5/16	**UELPL207-105D1**													**PL207D1**	**UEL207-105D1**		
1 ⅜	**UELPL207-106D1**													**PL207D1**	**UEL207-106D1**		
1 7/16	**UELPL207-107D1**													**PL207D1**	**UEL207-107D1**		
45	UELPL209D1	52.39	190	146	54	17	20	20	104	63.5	56.3	21.4	M14	PL209D1	UEL209D1	**7,350**	**4,590**
1 ⅝	**UELPL209-110D1**	2 1/16	7 15/32	5 ¾	2 ⅛	21/32	25/32	25/32	4 3/32	**2.50**	**2.217**	**.843**	½	**PL209D1**	**UEL209-110D1**		
1 11/16	**UELPL209-111D1**													**PL209D1**	**UEL209-111D1**		
1 ¾	**UELPL209-112D1**													**PL209D1**	**UEL209-112D1**		
50	UELPL210D1	55.56	206	159	60	20	23	21	112	69.9	62.7	24.6	M16	PL210D1	UEL210D1	**7,900**	**5,220**
1 13/16	**UELPL210-113D1**	2 3/16	8 ⅛	6 ¼	2 ⅜	25/32	29/32	13/16	4 13/32	**2.75**	**2.469**	**.969**	⅝	**PL210D1**	**UEL210-113D1**		
1 ⅞	**UELPL210-114D1**													**PL210D1**	**UEL210-114D1**		
1 15/16	**UELPL210-115D1**													**PL210D1**	**UEL210-115D1**		
2	**UELPL210-200D1**													**PL210D1**	**UEL210-200D1**		

Note: These numbers indicate relubricatable type. If maintenance free type is needed, please order without suffix D1
UELPL204 and UELPL205 have solid bases.
UELPL208 has the same dimensions as UELP208 shown on page 164

NTN

SERIES UELP3

ECCENTRIC LOCKING COLLAR TYPE

Units: Millimeters
INCHES

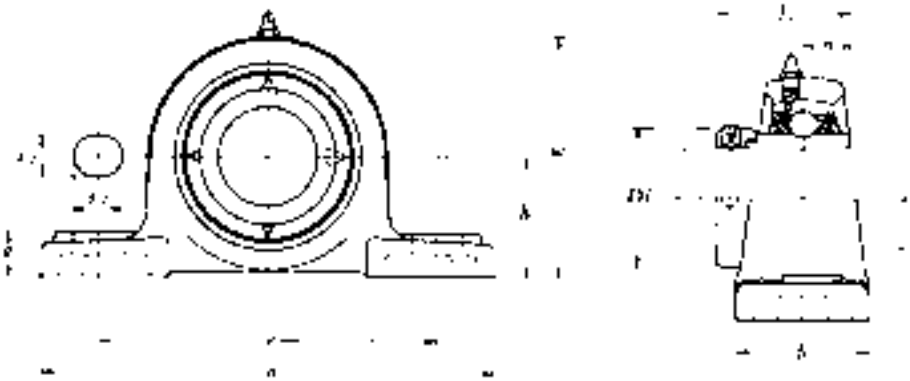

PILLOW BLOCKS - CAST HOUSING

Shaft Dia.	Complete Pillow Block Number	Nominal Dimensions h	a	e	b	s_1	s_2	g	w	Di	L	n	Bolt Size	Housing Number	Bearing Number	Basic Load Ratings (lbs) Dynamic C	Static C_o
25 7/8 15/16 1	UELP305D1 **UELP305-014D1** **UELP305-015D1** **UELP305-100D1**	45 1 49/64	175 6 7/8	132 5 3/16	45 1 25/32	17 21/32	20 25/32	15 18/32	85 3 11/32	42.8 1.69	46.8 1.843	16.7 .657	M14 1/2	P305D1 **P305D1** **P305D1** **P305D1**	UEL305D1 **UEL305-014D1** **UEL305-015D1** **UEL305-100D1**	**4,750**	**2,460**
30 1 1/8 1 3/16	UELP306D1 **UELP306-102D1** **UELP306-103D1**	50 1 31/32	180 7 3/32	140 5 1/2	50 1 31/32	17 21/32	20 25/32	18 23/32	95 3 3/4	50 1.97	50 1.969	17.5 .689	M14 1/2	P306D1 **P306D1** **P306D1**	UEL306D1 **UEL306-102D1** **UEL306-103D1**	**6,000**	**3,400**
35 1 1/4 1 5/16 1 3/8 1 7/16	UELP307D1 **UELP307-104D1** **UELP307-105D1** **UELP307-106D1** **UELP307-107D1**	56 2 13/64	210 8 9/32	160 6 5/16	56 2 7/32	17 21/32	25 31/32	20 25/32	106 4 3/16	55 2.17	51.6 2.031	18.3 .720	M14 1/2	P307D1 **P307D1** **P307D1** **P307D1** **P307D1**	UEL307D1 **UEL307-104D1** **UEL307-105D1** **UEL307-106D1** **UEL307-107D1**	**7,500**	**4,300**
40 1 1/2	UELP308D1 **UELP308-108D1**	60 2 23/64	220 8 21/32	170 6 11/16	60 2 3/8	17 21/32	27 1 1/16	22 7/8	116 4 9/16	63.5 2.50	57.1 2.248	19.8 .780	M14 1/2	P308D1 **P308D1**	UEL308D1 **UEL308-108D1**	**9,150**	**5,400**
45 1 5/8 1 11/16 1 3/4	UELP309D1 **UELP309-110D1** **UELP309-111D1** **UELP309-112D1**	67 2 41/64	245 9 21/32	190 7 15/32	67 2 5/8	20 25/32	30 1 3/16	24 15/16	129 5 3/32	70 2.76	58.7 2.311	19.8 .780	M16 5/8	P309D1 **P309D1** **P309D1** **P309D1**	UEL309D1 **UEL309-110D1** **UEL309-111D1** **UEL309-112D1**	**11,900**	**7,200**
50 1 7/8 1 15/16	UELP310D1 **UELP310-114D1** **UELP310-115D1**	75 2 61/64	275 10 13/16	212 8 11/32	75 2 15/16	20 25/32	35 1 3/8	27 1 1/16	143 5 5/8	76.2 3.00	66.6 2.622	24.6 .969	M16 5/8	P310D1 **P310D1** **P310D1**	UEL310D1 **UEL310-114D1** **UEL310-115D1**	**13,900**	**8,600**
55 2 2 1/8 2 3/16	UELP311D1 **UELP311-200D1** **UELP311-202D1** **UELP311-203D1**	80 3 5/32	310 12 7/32	236 9 9/32	80 3 5/32	20 25/32	38 1 1/2	30 1 3/16	154 6 1/16	83 3.27	73 2.874	27.8 1.094	M16 5/8	P311D1 **P311D1** **P311D1** **P311D1**	UEL311D1 **UEL311-200D1** **UEL311-202D1** **UEL311-203D1**	**16,100**	**10,100**
60 2 1/4 2 3/8 2 7/16	UELP312D1 **UELP312-204D1** **UELP312-206D1** **UELP312-207D1**	85 3 11/32	330 13	250 9 27/32	85 3 11/32	25 31/32	38 1 1/2	32 1 1/4	165 6 1/2	89 3.50	79.4 3.126	30.95 1.219	M20 3/4	P312D1 **P312D1** **P312D1** **P312D1**	UEL312D1 **UEL312-204D1** **UEL312-206D1** **UEL312-207D1**	**18,400**	**11,700**
65 2 1/2	UELP313D1 **UELP313-208D1**	90 3 35/64	340 13 3/8	260 10 1/4	90 3 17/32	25 31/32	38 1 1/2	33 1 5/16	176 6 15/16	97 3.82	85.7 3.374	32.55 1.281	M20 3/4	P313D1 **P313D1**	UEL313D1 **UEL313-208D1**	**20,800**	**13,400**
70 2 11/16 2 3/4	UELP314D1 **UELP314-211D1** **UELP314-212D1**	95 3 47/64	360 14 3/16	280 11 1/32	90 3 17/32	27 1 1/16	40 1 9/16	35 1 3/8	187 7 3/8	102 4.00	92.1 3.626	34.15 1.344	M22 7/8	P314D1 **P314D1** **P314D1**	UEL314D1 **UEL314-211D1** **UEL314-212D1**	**23,400**	**15,300**
75 2 15/16 3	UELP315D1 **UELP315-215D1** **UELP315-300D1**	100 3 15/16	380 14 31/32	290 11 13/32	100 3 15/16	27 1 1/16	40 1 9/16	35 1 3/8	198 7 25/32	113 4.45	100 3.937	37.3 1.469	M22 7/8	P315D1 **P315D1** **P315D1**	UEL315D1 **UEL315-215D1** **UEL315-300D1**	**25,500**	**17,400**
80 3 1/8 3 3/16	UELP316D1 **UELP316-302D1** **UELP316-303D1**	106 4 11/64	400 15 3/4	300 11 13/16	110 4 11/32	27 1 1/16	40 1 9/16	40 1 9/16	210 8 9/32	119 4.69	106.4 4.189	40.5 1.594	M22 7/8	P316D1 **P316D1** **P316D1**	UEL316D1 **UEL316-302D1** **UEL316-303D1**	**27,600**	**19,500**
85 3 1/4	UELP317D1 **UELP317-304D1**	112 4 13/32	420 16 17/32	320 12 19/32	110 4 11/32	33 1 5/16	45 1 25/32	40 1 9/16	220 8 21/32	127 5.00	109.5 4.311	42.05 1.656	M27 1	P317D1 **P317D1**	UEL317D1 **UEL317-304D1**	**29,800**	**21,800**
90 3 7/16 3 1/2	UELP318D1 **UELP318-307D1** **UELP318-308D1**	118 4 41/64	430 16 15/16	330 13	110 4 11/32	33 1 5/16	45 1 25/32	45 1 25/32	235 9 1/4	133 5.24	115.9 4.563	43.65 1.719	M27 1	P318D1 **P318D1** **P318D1**	UEL318D1 **UEL318-307D1** **UEL318-308D1**	**32,000**	**24,100**
95 3 3/4	UELP319D1 **UELP319-312D1**	125 4 59/64	470 18 1/2	360 14 3/16	120 4 23/32	36 1 13/32	50 1 31/32	45 1 25/32	250 9 27/32	140 5.50	122.3 4.815	38.9 1.531	M30 1 1/8	P319D1 **P319D1**	UEL319D1 **UEL319-312D1**	**34,500**	**26,600**
100 3 15/16 4	UELP320D1 **UELP320-315D1** **UELP320-400D1**	140 5 33/64	490 19 9/32	380 14 31/32	120 4 23/32	36 1 13/32	50 1 31/32	50 1 31/32	275 10 13/16	146 5.75	128.6 5.063	50 1.969	M30 1 1/8	P320D1 **P320D1** **P320D1**	UEL320D1 **UEL320-315D1** **UEL320-400D1**	**39,000**	**31,500**
105	UELP321D1	140	490	380	120	36	50	50	280	157	139.7	48.4	M30	P321D1	UEL321D1	**41,500**	**34,500**
110	UELP322D1	150	520	400	140	40	55	55	300	168	141.3	49.2	M33	P322D1	UEL322D1	**46,000**	**40,500**

Units: Millimeters
INCHES

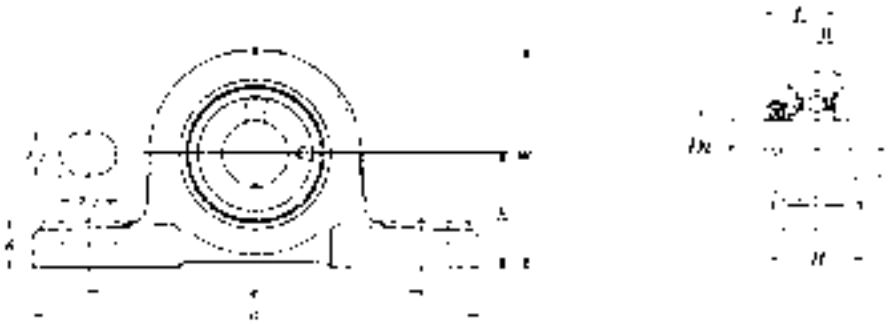

SERIES JELPL2

ECCENTRIC LOCKING COLLAR TYPE

PILLOW BLOCKS - CAST HOUSING (LOW CENTER HEIGHT)

Shaft Dia.	Complete Pillow Block Number	Nominal Dimensions											Bolt Size	Housing Number	Bearing Number	Basic Load Ratings (lbs)	
		h	*a*	*e*	*b*	s_1	s_2	*g*	*w*	*Di*	*L*	*n*				*Dynamic C*	*Static* C_o
12 1/2	JELPL201 **JELPL201-008**	26.99 **1 1/16**	121 **4 3/4**	89 **3 1/2**	35 **1 3/8**	11 **7/16**	14 **9/16**	13 **1/2**	54 **2 1/8**	29 **1.14**	28.6 **1.126**	6.5 **.256**	M10 **3/8**	PL201 **PL201**	JEL201 **JEL201-008**	**2,160**	**1,030**
15 9/16 5/8	JELPL202 **JELPL202-009** **JELPL202-010**	26.99 **1 1/16**	121 **4 3/4**	89 **3 1/2**	35 **1 3/8**	11 **7/16**	14 **9/16**	13 **1/2**	54 **2 1/8**	29 **1.14**	28.6 **1.126**	6.5 **.256**	M10 **3/8**	PL201 **PL201** **PL201**	JEL202 **JEL202-009** **JEL202-010**	**2,160**	**1,030**
17 11/16	JELPL203 **JELPL203-011**	26.99 **1 1/16**	121 **4 3/4**	89 **3 1/2**	35 **1 3/8**	11 **7/16**	14 **9/16**	13 **1/2**	54 **2 1/8**	29 **1.14**	28.6 **1.126**	6.5 **.256**	M10 **3/8**	PL201 **PL201**	JEL203 **JEL203-011**	**2,160**	**1,030**
20 3/4	JELPL204 **JELPL204-012**	31.75 **1 1/4**	127 **5**	95 **3 3/4**	38 **1 1/2**	13 **1/2**	16 **5/8**	14 **9/16**	64 **2 17/32**	33.3 **1.31**	31 **1.220**	7.5 **.295**	M10 **3/8**	PL204 **PL204**	JEL204 **JEL204-012**	**2,890**	**1,500**
25 13/16 7/8 15/16 1	JELPL205 **JELPL205-013** **JELPL205-014** **JELPL205-015** **JELPL205-100**	33.34 **1 5/16**	140 **5 1/2**	105 **4 1/8**	38 **1 1/2**	13 **1/2**	16 **5/8**	15 **19/32**	68 **2 11/16**	38.1 **1.50**	31 **1.220**	7.5 **.295**	M10 **3/8**	PL205 **PL205** **PL205** **PL205** **PL205**	JEL205 **JEL205-013** **JEL205-014** **JEL205-015** **JEL205-100**	**3,150**	**1,770**
30 1 1/16 1 1/8 1 3/16 1 1/4	JELPL206 **JELPL206-101** **JELPL206-102** **JELPL206-103** **JELPL206-104**	39.69 **1 9/16**	165 **6 1/2**	121 **4 3/4**	48 **1 7/8**	17 **21/32**	20 **25/32**	17 **21/32**	80 **3 5/32**	44.5 **1.75**	35.7 **1.406**	9 **.354**	M14 **1/2**	PL206 **PL206** **PL206** **PL206** **PL206**	JEL206 **JEL206-101** **JEL206-102** **JEL206-103** **JEL206-104**	**4,400**	**2,540**
35 1 1/4 1 5/16 1 3/8 1 7/16	JELPL207 **JELPL207-104** **JELPL207-105** **JELPL207-106** **JELPL207-107**	46.04 **1 13/16**	167 **6 9/16**	127 **5**	48 **1 7/8**	17 **21/32**	20 **25/32**	18 **23/32**	91 **3 19/32**	55.6 **2.19**	38.9 **1.531**	9.5 **.374**	M14 **1/2**	PL207 **PL207** **PL207** **PL207** **PL207**	JEL207 **JEL207-104** **JEL207-105** **JEL207-106** **JEL207-107**	**5,750**	**3,450**

SERIES AELP2

ECCENTRIC LOCKING COLLAR TYPE

Units: Millimeters
INCHES

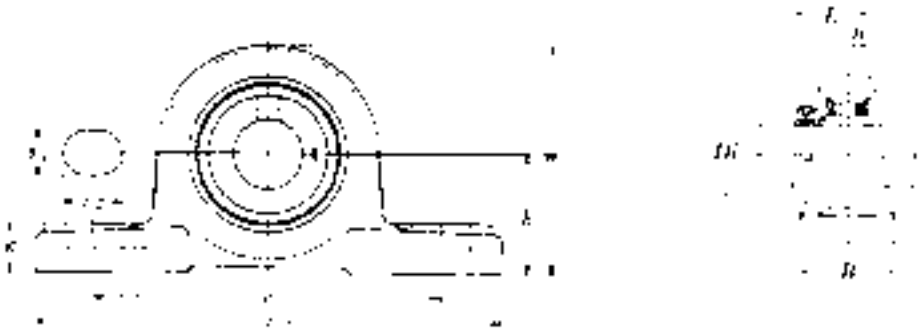

PILLOW BLOCKS - CAST HOUSING

Shaft Diameter	Complete Pillow Block Number	Nominal Dimensions											Bolt Size	Housing Number	Bearing Number	Basic Load Ratings (lbs)	
		h	*a*	*e*	*b*	s_1	s_2	*g*	*w*	*Di*	*L*	*n*				*dynamic C*	*static Co*
20	AELP204D1	33.34	127	95	38	13	16	14	65.09	33.3	31	7.5	M10	P204D1	AEL204D1	2,890	1,500
¾	AELP204-012D1	1 5/16	5	3 ¾	1 ½	½	⅝	9/16	2 7/16	1.31	1.220	.295	⅜	P204D1	AEL204-012D1		
25	AELP205D1	36.51	140	105	38	13	16	15	70.64	38.1	31	7.5	M10	P205D1	AEL205D1	3,150	1,770
13/16	AELP205-013D1	1 7/16	5 ½	4 ⅛	1 ½	½	⅝	19/32	2 25/32	1.50	1.220	.295	⅜	P205D1	AEL205-013D1		
⅞	AELP205-014D1													P205D1	AEL205-014D1		
15/16	AELP205-015D1													P205D1	AEL205-015D1		
1	AELP205-100D1													P205D1	AEL205-100D1		
30	AELP206D1	42.86	165	121	48	17	20	17	83.34	44.50	35.7	9.0	M14	P206D1	AEL206D1	4,400	2,540
1 1/16	AELP206-101D1	1 11/16	6 ½	4 ¾	1 ⅞	21/32	25/32	21/32	3 9/32	1.75	1.406	.354	½	P206D1	AEL206-101D1		
1 ⅛	AELP206-102D1													P206D1	AEL206-102D1		
1 3/16	AELP206-103D1													P206D1	AEL206-103D1		
1 ¼	AELP206-104D1													P206D1	AEL206-104D1		
35	AELP207D1	47.63	167	127	48	17	20	18	92.87	55.6	38.9	9.5	M14	P207D1	AEL207D1	5,750	3,440
1 ¼	AELP207-104D1	1 ⅞	6 9/16	5	1 ⅞	21/32	25/32	21/32	3 21/32	2.19	1.531	.374	½	P207D1	AEL207-104D1		
1 5/16	AELP207-105D1													P207D1	AEL207-105D1		
1 ⅜	AELP207-106D1													P207D1	AEL207-106D1		
1 7/16	AELP207-107D1													P207D1	AEL207-107D1		
40	AELP208D1	49.2	184	137	54	17	20	18	98	52	49.2	19	M14	P208D1	AEL208D1	6,550	4,000
1 ½	AELP208-108D1	1 15/16	7 ¼	5 ⅜	2 ⅛	21/32	25/32	21/32	3 27/32	2.37	1.719	.433	½	P208D1	AEL208-108D1		
1 9/16	AELP208-109D1													P208D1	AEL208-109D1		
45	AELP209D1	54	190	146	54	17	20	20	106	60	49.2	19	M14	P209D1	AEL209D1	7,350	4,590
1 ⅝	AELP209-110D1	2 ⅛	7 15/32	5 ¾	2 ⅛	21/32	25/32	21/32	4 3/16	2 ⅜	1.937	.748	½	P209D1	AEL209-110D1		
1 11/16	AELP209-111D1													P209D1	AEL209-111D1		
1 ¾	AELP209-112D1													P209D1	AEL209-112D1		
50	AELP210D1	57.2	206	159	60	20	23	21	114	65	51.6	19	M16	P210D1	AEL210D1	7,900	5,220
1 13/16	AELP210-113D1	2 ¼	8 ⅛	6 ¼	2 ⅜	25/32	29/32	13/16	4 ½	2 9/16	2.031	.749	⅜	P210D1	AEL210-113D1		
1 ⅞	AELP210-114D1													P210D1	AEL210-114D1		
1 15/16	AELP210-115D1													P210D1	AEL210-115D1		

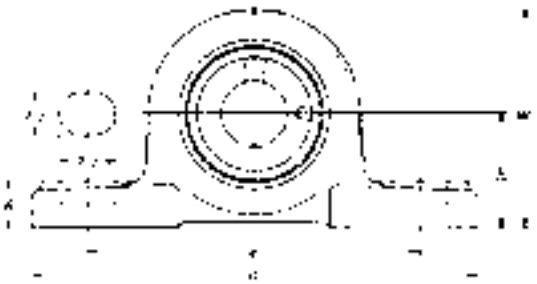

Units: Millimeters
INCHES

NTN

SERIES AELPL2

ECCENTRIC LOCKING COLLAR TYPE

PILLOW BLOCKS - CAST HOUSING (LOW CENTER HEIGHT)

Shaft Dia.	Complete Pillow Block Number	Nominal Dimensions											Bolt Size	Housing Number	Bearing Number	Basic Load Ratings (lbs)	
		h	a	e	b	s_1	s_2	g	w	Di	L	n				Dynamic C	Static C_o
12 ½	AELPL201 **AELPL201-008**	26.99 **1 1/16**	121 **4 3/4**	89 **3 ½**	35 **1 3/8**	11 7/16	14 9/16	13 ½	54 **2 ⅛**	29 **1.14**	28.6 **1.126**	6.5 **.256**	M10 ⅜	PL201 **PL201**	AEL201 **AEL201-008**	**2,160**	**1,040**
15 9/16 ⅝	AELPL202 **AELPL202-009** **AELPL202-010**	26.99 **1 1/16**	121 **4 3/4**	89 **3 ½**	35 **1 3/8**	11 7/16	14 9/16	13 ½	54 **2 ⅛**	29 **1.14**	28.6 **1.126**	6.5 **.256**	M10 ⅜	PL201 **PL201** **PL201**	AEL202 **AEL202-009** **AEL202-010**	**2,160**	**1,040**
17 11/16	AELPL203 **AELPL203-011**	26.99 **1 1/16**	121 **4 3/4**	89 **3 ½**	35 **1 3/8**	11 7/16	14 9/16	13 ½	54 **2 ⅛**	29 **1.14**	28.6 **1.126**	6.5 **.256**	M10 ⅜	PL201 **PL201**	AEL203 **AEL203-011**	**2,160**	**1,040**
20 ¾	AELPL204 **AELPL204-012**	31.75 **1 ¼**	127 **5**	95 **3 ¾**	38 **1 ½**	13 ½	16 ⅝	14 9/16	64 **2 17/32**	33.3 **1.31**	31 **1.220**	7.5 **.295**	M10 ⅜	PL204 **PL204**	AEL204 **AEL204-012**	**2,890**	**1,500**
25 13/16 ⅞ 15/16 1	AELPL205 **AELPL205-013** **AELPL205-014** **AELPL205-015** **AELPL205-100**	33.34 **1 5/16**	140 **5 ½**	105 **4 ⅛**	38 **1 ½**	13 ½	16 ⅝	15 19/32	68 **2 11/16**	38.1 **1.50**	31 **1.220**	7.5 **.295**	M10 ⅜	PL205 **PL205** **PL205** **PL205** **PL205**	AEL205 **AEL205-013** **AEL205-014** **AEL205-015** **AEL205-100**	**3,150**	**1,770**
30 1 1/16 1 ⅛ 1 3/16 1 ¼	AELPL206 **AELPL206-101** **AELPL206-102** **AELPL206-103** **AELPL206-104**	39.69 **1 9/16**	165 **6 ½**	121 **4 ¾**	48 **1 ⅞**	17 21/32	20 25/32	17 21/32	80 **3 5/32**	44.5 **1.75**	35.7 **1.406**	9 **.354**	M14 ½	PL206 **PL206** **PL206** **PL206** **PL206**	AEL206 **AEL206-101** **AEL206-102** **AEL206-103** **AEL206-104**	**4,400**	**2,540**
35 1 ¼ 1 5/16 1 ⅜ 1 7/16	AELPL207 **AELPL207-104** **AELPL207-105** **AELPL207-106** **AELPL207-107**	46.04 **1 13/16**	167 **6 9/16**	127 **5**	48 **1 ⅞**	17 21/32	20 25/32	18 23/32	91 **3 19/32**	55.6 **2.19**	38.9 **1.531**	9.5 **.374**	M14 ½	PL207 **PL207** **PL207** **PL207** **PL207**	AEL207 **AEL207-104** **AEL207-105** **AEL207-106** **AEL207-107**	**5,750**	**3,440**

Note: AELPL201 - AELPL205 have a solid base

SERIES AELPP2

ECCENTRIC LOCKING COLLAR TYPE

Units: Millimeters
INCHES

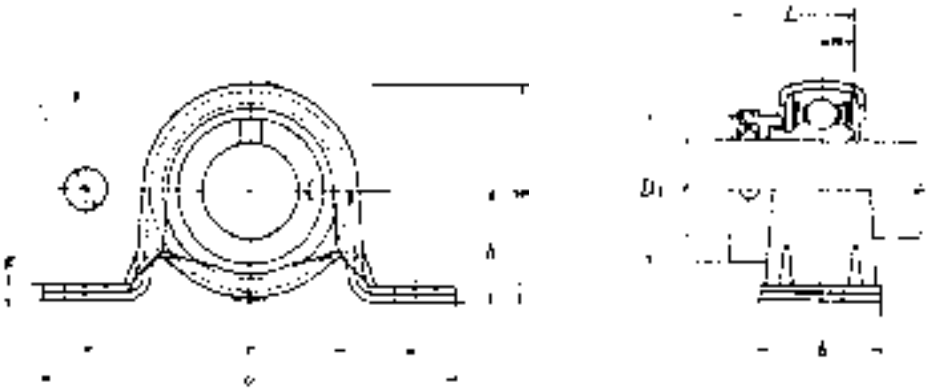

PILLOW BLOCKS - PRESSED STEEL HOUSING

Shaft Dia.	Complete Pillow Block Number	Nominal Dimensions h	a	e	b	s	g	w	L	n	Bolt Size	Housing Number	Bearing Number	Basic Load Ratings (lbs) Dynamic C	Static C_o	Max. Radial Load (lbs)
12 ½	AELPP201 **AELPP201-008**	22.2 ⅞	86 3 ⅜	68 2 11/16	25 31/32	9.5 ⅜	3.2 .126	43.8 1 23/32	28.6 1.126	6.5 .256	M8 5/16	PP203 **PP203**	AEL201 **AEL201-008**	**2,160**	**1,040**	**440**
15 9/16 ⅝	AELPP202 **AELPP202-009** **AELPP202-010**	22.2 ⅞	86 3 ⅜	68 2 11/16	25 31/32	9.5 ⅜	3.2 .126	43.8 1 23/32	28.6 1.126	6.5 .256	M8 5/16	PP203 **PP203** **PP203**	AEL202 **AEL202-009** **AEL202-010**	**2,160**	**1,040**	**440**
17 11/16	AELPP203 **AELPP203-011**	22.2 **7/8**	86 3 ⅜	68 2 11/16	25 31/32	9.5 ⅜	3.2 .126	43.8 1 23/32	28.6 1.126	6.5 .256	M8 5/16	PP203 **PP203**	AEL203 **AEL203-011**	**2,160**	**1,040**	**440**
20 ¾	AELPP204 **AELPP204-012**	25.4 **1**	98 3 27/32	76 **3**	32 1 ¼	9.5 ⅜	3.2 .126	50.5 **2**	31 1.220	7.5 .295	M8 5/16	PP204 **PP204**	AEL204 **AEL204-012**	**2,890**	**1,500**	**550**
25 13/16 ⅞ 15/16 1	AELPP205 **AELPP205-013** **AELPP205-014** **AELPP205-015** **AELPP205-100**	28.6 1 ⅛	108 4 ¼	86 3 ⅜	32 1 ¼	11 7/16	4 .157	56.6 2 7/32	31 1.220	7.5 .295	M10 ⅜	PP205 **PP205** **PP205** **PP205** **PP205**	AEL205 **AEL205-013** **AEL205-014** **AEL205-015** **AEL205-100**	**3,150**	**1,770**	**770**
30 1 1/16 1 ⅛ 1 3/16 1 ¼	AELPP206 **AELPP206-101** **AELPP206-102** **AELPP206-103** **AELPP206-104**	33.3 1 5/16	117 4 19/32	95 3 ¾	38 1 ½	11 7/16	4 .157	66.3 2 ⅝	35.7 1.406	9 .354	M10 ⅜	PP206 **PP206** **PP206** **PP206** **PP206**	AEL206 **AEL206-101** **AEL206-102** **AEL206-103** **AEL206-104**	**4,400**	**2,540**	**880**
35 1 ¼ 1 5/16 1 ⅜ 1 7/16	AELPP207 **AELPP207-104** **AELPP207-105** **AELPP207-106** **AELPP207-107**	39.7 1 9/16	129 5 3/32	106 4 3/16	42 1 21/32	11 7/16	4.6 .181	78 3 1/16	38.9 1.531	9.5 .374	M10 ⅜	PP207 **PP207** **PP207** **PP207** **PP207**	AEL207 **AEL207-104** **AEL207-105** **AEL207-106** **AEL207-107**	**5,750**	**3,440**	**990**

Axial load should be less than 1/3 of radial load.

Units: Millimeters
INCHES

NTN

SERIES UKP2

ADAPTER TYPE

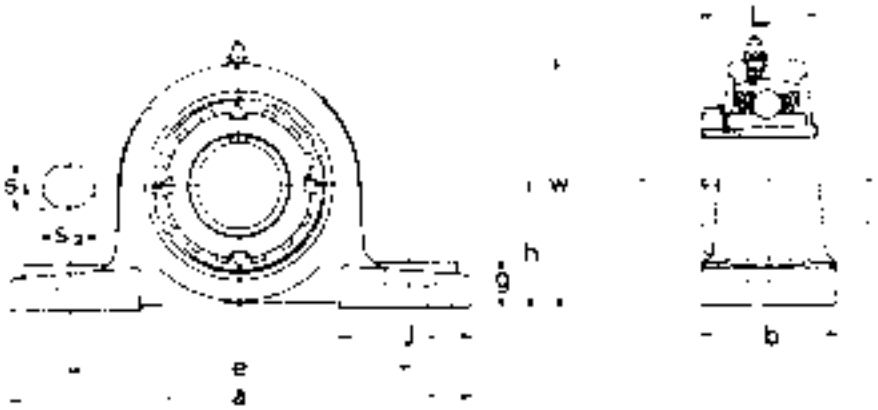

PILLOW BLOCKS - CAST HOUSING

Shaft Diameter	Unit Number	Nominal Dimensions										Bolt Size	Housing Number	Bearing Number	Basic Load Ratings (lbs)	
		h	*a*	*e*	*b*	s_1	s_2	*g*	*w*	*L*	*j*				*dynamic C*	*static Co*
20	UKP205D1 ; H 2305X	36.5	140	105	38	13	16	15	71	35	42	M10	P205D1	UK205D1 ; H 2305X	3,150	1,770
¾	UKP205D1 ; HE2305	1 7/16	5 ½	4 ½	1 ½	½	⅝	19/32	2 25/32	1.378	1 21/32	⅜		UK205D1 ; HE2305		
25	UKP206D1 ; H 2306X	42.9	165	121	48	17	20	17	83	38	54	M14	P206D1	UK206D1 ; H 2306X	4,400	2,540
⅞	UKP206D1 ; HS2306	1 11/16	6 ½	4 ¾	1 ⅞	21/32	25/32	21/32	3 9/32	1.496	2 ⅛	½		UK206D1 ; HS2306		
1	UKP206D1 ; HE2306X													UK206D1 ; HE2306X		
30	UKP207D1 ; H 2307X	47.6	167	127	48	17	20	18	93	43	54	M14	P207D1	UK207D1 ; H 2307X	5,750	3,450
1 ⅛	UKP207D1 ; HS2307	1 ⅞	6 9/16	5	1 ⅞	21/32	25/32	23/32	3 21/32	1.693	2 ⅛	½		UK207D1 ; HS2307		
35	UKP208D1 ; H 2308X	49.2	184	137	54	17	20	18	98	46	52	M14	P207D1	UK208D1 ; H 2308X	6,550	4,000
1 ¼	UKP208D1 ; HE2308	1 15/16	7 ¼	5 13/32	2 ⅛	21/32	25/32	25/32	3 27/32	1.811	2 1/16	½		UK208D1 ; HE2308		
1 ⅜	UKP208D1 ; HS2308X													UK208D1 ; HS2308X		
40	UKP209D1 ; H 2309X	54	190	146	54	17	20	20	106	50	60	M14	P208D1	UK209D1 ; H 2309X	7,350	4,600
1 7/16	UKP209D1 ; HA2309	2 ⅛	7 15/32	5 ¾	2 ⅛	21/32	25/32	25/32	4 3/16	1.969	2 ⅜	½		UK209D1 ; HA2309		
1 ½	UKP209D1 ; HE2309X													UK209D1 ; HE2309X		
1 ⅝	UKP209D1 ; HS2309X													UK209D1 ; HS2309X		
45	UKP210D1 ; H 2310X	57.2	206	159	60	20	23	21	114	55	65	M16	P210D1	UK210D1 ; H 2310X	7,900	5,200
1 ⅝	UKP210D1 ; HS2310	2 ¼	8 ⅛	6 ¼	2 ⅜	25/32	29/32	13/16	4 ½	2.165	1 9/16	⅝		UK210D1 ; HS2310		
1 11/16	UKP210D1 ; HA2310													UK210D1 ; HA2310		
1 ¾	UKP210D1 ; HE2310X													UK210D1 ; HE2310X		
50	UKP211D1 ; H 2311X	63.5	219	171	60	20	23	23	126	59	65	M16	P211D1	UK211D1 ; H 2311X	9,750	6,550
1 ⅞	UKP211D1 ; HS2311	2 ½	8 ⅝	6 23/32	2 ⅜	25/32	29/32	29/32	4 32/32	2.323	2 9/16	⅝		UK211D1 ; HS2311		
1 15/16	UKP211D1 ; HA2311													UK211D1 ; HA2311		
2	UKP211D1 ; HE2311XY													UK211D1 ; HE2311XY		
55	UKP212D1 ; H 2312X	69.8	241	184	70	20	23	25	138	62	70	M16	P212D1	UK212D1 ; H 2312X	11,800	8,150
2 ⅛	UKP212D1 ; HS2312	2 ¾	9 ½	7 ¼	2 ¾	25/32	29/32	31/32	5 7/16	2.441	2 ¾	⅝		UK212D1 ; HS2312		
60	UKP213D1 ; H 2313X	76.2	265	203	70	25	28	27	151	65	77	M20	P213D1	UK213D1 ; H 2313X	12,900	9,000
2 3/16	UKP213D1 ; HA2313	3	10 7/16	8	2 ¾	31/32	1 3/32	1 1/16	5 15/16	2.559	3 1/32	¾		UK213D1 ; HA2313		
2 ¼	UKP213D1 ; HE2313													UK213D1 ; HE2313		
2 ⅜	UKP213D1 ; HS2313													UK213D1 ; HS2313		
65	UKP215D1 ; H 2315X	82.6	275	217	74	25	28	27	151	65	77	M20	P215D1	UK215D1 ; H 2315X	14,900	11,100
2 7/16	UKP215D1 ; HA2315	3 ¼	10 13/16	8 17/32	2 29/32	31/32	1 3/32	1 3/32	6 13/32	2.874	3 5/32	¾		UK215D1 ; HA2315		
2 ½	UKP215D1 ; HE2315													UK215D1 ; HE2315		
70	UKP216D1 ; H2316X	88.9	292	232	78	25	28	30	175	78	85	M22	P216D1	UK216D1 ; H2316X	16,300	11,900
2 11/16	UKP216D1 ; HA2316	3 ½	11 ½	9 ⅛	3 1/16	31/32	1 3/32	1 3/16	6 ⅞	3.071	3 11/32	⅞		UK216D1 ; HA2316		
2 ¾	UKP216D1 ; HE2316													UK216D1 ; HE2316		
75	UKP217D1 ; H 2317X	95.2	310	247	83	25	28	32	187	82	85	M22	P217D1	UK217D1 ; H 2317X	18,700	14,300
2 15/16	UKP217D1 ; HA2317	3 ¾	12 7/32	9 23/32	3 9/32	31/32	1 3/32	1 1/14	7 ⅜	3.228	3 11/32	⅞		UK217D1 ; HA2317		
3	UKP217D1 ; HE2317													UK217D1 ; HE2317		
80	UKP218D1 ; H 2318X	101.6	327	262	88	27	30	33	200	86	90	M22	P218D1	UK218D1 ; H 2318X	21,600	16,100
3 1/16	UKP218D1 ; HA2318	4	12 ⅞	10 5/16	3 15/32	1 1/16	1 3/16	1 5/16	7 ⅞	3.386	3 17/32	⅞		UK218D1 ; HA2318		

These numbers indicate re-lubricate type. If maintenance free type is needed, please order without suffix "D1".

Adapter number with suffix "X" means a narrow slot type adapter sleeve. In this case the lock washer with the straight inner prong should be used.

For HE2311XY, screw thread pitch different from the standard is applied, because of the thin thread section of sleeve. To distinguish it, a suffix "Y" is added.

Note: Please consult NTN Engineering for grease fitting details.

BEARING WEIGHTS

Bearing Series → **UCP2 SERIES**

UCP201D1 ..... 1.5

Complete Pillow Block Number

Weight (lbs)

GREENLINE PILLOW BLOCKS — LBS.

UCP2 SERIES
UCP201D1 ..... 1.5
UCP201-008D1 ..... 1.5
UCP202D1 ..... 1.5
UCP202-009D1 ..... 1.5
UCP202-010D1 ..... 1.5
UCP203D1 ..... 1.5
UCP203-011D1 ..... 1.5
UCP204D1 ..... 1.5
UCP204-012D1 ..... 1.5
UCP205D1 ..... 1.8
UCP205-013D1 ..... 1.8
UCP205-014D1 ..... 1.8
UCP205-015D1 ..... 1.8
UCP205-100D1 ..... 1.8
UCP206D1 ..... 2.9
UCP206-101D1 ..... 2.9
UCP206-102D1 ..... 2.9
UCP206-103D1 ..... 2.9
UCP206-104D1 ..... 2.9
UCP207D1 ..... 3.5
UCP207-104D1 ..... 3.5
UCP207-105D1 ..... 3.5
UCP207-106D1 ..... 3.5
UCP207-107D1 ..... 3.5
UCP208D1 ..... 4.2
UCP208-108D1 ..... 4.2
UCP208-109D1 ..... 4.2
UCP209D1 ..... 4.9
UCP209-110D1 ..... 4.9
UCP209-111D1 ..... 4.9
UCP209-112D1 ..... 4.9
UCP210D1 ..... 5.7
UCP210-113D1 ..... 5.7
UCP210-114D1 ..... 5.7
UCP210-115D1 ..... 5.7
UCP210-200D1 ..... 5.7
UCP211D1 ..... 7.3
UCP211-200D1 ..... 7.3
UCP211-201D1 ..... 7.3
UCP211-202D1 ..... 7.3
UCP211-203D1 ..... 7.3
UCP212D1 ..... 10.0
UCP212-204D1 ..... 10.0
UCP212-206D1 ..... 10.0
UCP212-207D1 ..... 10.0
UCP213D1 ..... 13.0
UCP213-208D1 ..... 13.0
UCP214D1 ..... 15.0
UCP214-211D1 ..... 15.0
UCP214-212D1 ..... 15.0
UCP215D1 ..... 16.0
UCP215-215D1 ..... 16.0
UCP215-300D1 ..... 16.0
UCP216D1 ..... 20.0
UCP216-302D1 ..... 20.0
UCP217D1 ..... 24.0
UCP217-304D1 ..... 24.0
UCP218D1 ..... 29.0
UCP218-308D1 ..... 29.0

UCPL2 SERIES
UCPL204D1 ..... 1.3
UCPL204-012D1 ..... 1.3
UCPL205D1 ..... 1.8
UCPL205-013D1 ..... 1.8
UCPL205-014D1 ..... 1.8
UCPL205-015D1 ..... 1.8
UCPL205-100D1 ..... 1.8
UCPL206D1 ..... 2.6
UCPL206-101D1 ..... 2.6
UCPL206-102D1 ..... 2.6
UCPL206-103D1 ..... 2.6
UCPL206-104D1 ..... 2.6
UCPL207D1 ..... 3.5
UCPL207-104D1 ..... 3.5
UCPL207-105D1 ..... 3.5
UCPL207-106D1 ..... 3.5
UCPL207-107D1 ..... 3.5
UCPL209D1 ..... 4.9
UCPL209-110D1 ..... 4.9
UCPL209-111D1 ..... 4.9
UCPL209-112D1 ..... 4.9
UCPL210D1 ..... 5.7
UCPL210-113D1 ..... 5.7
UCPL210-114D1 ..... 5.7
UCPL210-115D1 ..... 5.7
UCPL210-200D1 ..... 5.7

UCP3 SERIES
UCP305D1 ..... 3.3
UCP305-014D1 ..... 3.3
UCP305-015D1 ..... 3.3
UCP305-100D1 ..... 3.3
UCP306D1 ..... 4.0
UCP306-102D1 ..... 4.0
UCP306-103D1 ..... 4.0
UCP307D1 ..... 6.2
UCP307-104D1 ..... 6.2
UCP307-105D1 ..... 6.2
UCP307-106D1 ..... 6.2
UCP307-107D1 ..... 6.2
UCP308D1 ..... 6.6
UCP308-108D1 ..... 6.6
UCP309D1 ..... 9.0
UCP309-110D1 ..... 9.0
UCP309-111D1 ..... 9.0
UCP309-112D1 ..... 9.0
UCP310D1 ..... 0.1
UCP310-114D1 ..... 13.0
UCP310-115D1 ..... 13.0
UCP311D1 ..... 16.0
UCP311-200D1 ..... 16.0
UCP311-202D1 ..... 16.0
UCP311-203D1 ..... 16.0
UCP312D1 ..... 21.0
UCP312-204D1 ..... 21.0
UCP312-206D1 ..... 21.0
UCP312-207D1 ..... 21.0
UCP313D1 ..... 22.0
UCP313-208D1 ..... 22.0
UCP314D1 ..... 26.0
UCP314-211D1 ..... 26.0
UCP314-212D1 ..... 26.0
UCP315D1 ..... 31.0
UCP315-215D1 ..... 31.0
UCP315-300D1 ..... 31.0
UCP316D1 ..... 40.0
UCP316-302D1 ..... 40.0
UCP316-303D1 ..... 40.0
UCP317D1 ..... 44.0
UCP317-304D1 ..... 44.0
UCP318D1 ..... 53.0
UCP318-307D1 ..... 53.0
UCP318-308D1 ..... 53.0
UCP319D1 ..... 64.0
UCP319-312D1 ..... 64.0
UCP320D1 ..... 77.0
UCP320-315D1 ..... 77.0
UCP320-400D1 ..... 77.0
UCP321D1 ..... 77.0
UCP322D1 ..... 99.0
UCP324D1 ..... 121.0
UCP326D1 ..... 159.0
UCP328D1 ..... 196.0

UCPX SERIES
UCPX05D1 ..... 3.3
UCPX05-013D1 ..... 3.3
UCPX05-014D1 ..... 3.3
UCPX05-015D1 ..... 3.3
UCPX05-100D1 ..... 3.3
UCPX06D1 ..... 4.4
UCPX06-101D1 ..... 4.4
UCPX06-102D1 ..... 4.4
UCPX06-103D1 ..... 4.4
UCPX06-104D1 ..... 4.4
UCPX07D1 ..... 5.7
UCPX07-105D1 ..... 5.7
UCPX07-106D1 ..... 5.7
UCPX07-107D1 ..... 5.7
UCPX08D1 ..... 7.3
UCPX08-108D1 ..... 7.3
UCPX08-109D1 ..... 7.3
UCPX09D1 ..... 7.3
UCPX09-110D1 ..... 7.3
UCPX09-111D1 ..... 7.3
UCPX09-112D1 ..... 7.3
UCPX09-113D1 ..... 7.3
UCPX10D1 ..... 9.5
UCPX10-114D1 ..... 9.5
UCPX10-115D1 ..... 9.5
UCPX10-200D1 ..... 9.5
UCPX11D1 ..... 13.0
UCPX11-202D1 ..... 13.0
UCPX11-203D1 ..... 13.0
UCPX11-204D1 ..... 13.0
UCPX11-205D1 ..... 13.0
UCPX12D1 ..... 16.0
UCPX12-206D1 ..... 16.0
UCPX12-207D1 ..... 16.0
UCPX13D1 ..... 17.0
UCPX13-208D1 ..... 17.0
UCPX13-209D1 ..... 17.0
UCPX14D1 ..... 22.0
UCPX14-210D1 ..... 22.0
UCPX14-211D1 ..... 22.0
UCPX14-212D1 ..... 22.0
UCPX15D1 ..... 24.0
UCPX15-213D1 ..... 24.0
UCPX15-214D1 ..... 24.0
UCPX15-215D1 ..... 24.0
UCPX15-300D1 ..... 24.0
UCPX16D1 ..... 33.0
UCPX16-302D1 ..... 33.0
UCPX16-303D1 ..... 33.0
UCPX16-304D1 ..... 33.0
UCPX17D1 ..... 35.0
UCPX17-305D1 ..... 35.0
UCPX17-307D1 ..... 35.0
UCPX18D1 ..... 37.0
UCPX18-308D1 ..... 37.0
UCPX20D1 ..... 66.0
UCPX20-314D1 ..... 66.0
UCPX20-315D1 ..... 66.0
UCPX20-400D1 ..... 66.0

ASPL2 SERIES
ASPL201 ..... 1.3
ASPL201-008 ..... 1.3
ASPL202 ..... 1.3
ASPL202-009 ..... 1.3
ASPL202-010 ..... 1.3
ASPL203 ..... 1.1
ASPL203-011 ..... 1.1
ASPL204 ..... 1.3
ASPL204-012 ..... 1.3
ASPL205 ..... 1.5
ASPL205-013 ..... 1.5
ASPL205-014 ..... 1.5
ASPL205-015 ..... 1.5
ASPL205-100 ..... 1.5
ASPL206 ..... 2.6
ASPL206-101 ..... 2.6
ASPL206-103 ..... 2.6
ASPL206-104 ..... 2.6
ASPL207 ..... 3.3
ASPL207-104 ..... 3.3
ASPL207-105 ..... 3.3
ASPL207-106 ..... 3.3
ASPL207-107 ..... 3.3

ASPP2 SERIES
ASPP201 ..... 0.4
ASPP201-008 ..... 0.4
ASPP202 ..... 0.2
ASPP202-009 ..... 0.2
ASPP202-010 ..... 0.2
ASPP203 ..... 0.2
ASPP203-011 ..... 0.2
ASPP204 ..... 0.4
ASPP204-012 ..... 0.4
ASPP205 ..... 0.7
ASPP205-013 ..... 0.7
ASPP205-014 ..... 0.7
ASPP205-015 ..... 0.7
ASPP205-100 ..... 0.7
ASPP206 ..... 0.9
ASPP206-101 ..... 0.9
ASPP206-102 ..... 0.9
ASPP206-103 ..... 0.9
ASPP206-104 ..... 0.9
ASPP207 ..... 1.3
ASPP207-104 ..... 1.3
ASPP207-105 ..... 1.3
ASPP207-106 ..... 1.3
ASPP207-107 ..... 1.3

UELP2 SERIES
UELP204D1 ..... 1.5
UELP204-012D1 ..... 1.5
UELP205D1 ..... 2.0
UELP205-013D1 ..... 2.0
UELP205-014D1 ..... 2.0
UELP205-015D1 ..... 2.0
UELP205-100D1 ..... 2.0
UELP206D1 ..... 3.1
UELP206-101D1 ..... 3.1
UELP206-102D1 ..... 3.1
UELP206-103D1 ..... 3.1
UELP206-104D1 ..... 3.1
UELP207D1 ..... 4.0
UELP207-104D1 ..... 4.0
UELP207-105D1 ..... 4.0
UELP207-106D1 ..... 4.0
UELP207-107D1 ..... 4.0
UELP208D1 ..... 4.4
UELP208-108D1 ..... 4.4
UELP208109D1 ..... 4.4
UELP209D1 ..... 5.3
UELP209-110D1 ..... 5.3
UELP209-111D1 ..... 5.3
UELP209-112D1 ..... 5.3
UELP210D1 ..... 6.2
UELP210-113D1 ..... 6.2
UELP210-114D1 ..... 6.2
UELP210-115D1 ..... 6.2
UELP210-200D1 ..... 6.2
UELP211D1 ..... 7.7
UELP211-200D1 ..... 7.7
UELP211-201D1 ..... 7.7
UELP211-202D1 ..... 7.7
UELP211-203D1 ..... 7.7
UELP212D1 ..... 11.0
UELP212-204D1 ..... 11.0
UELP212-206D1 ..... 11.0
UELP212-207D1 ..... 11.0
UELP213D1 ..... 14.0
UELP213-208D1 ..... 14.0
UELP214D1 ..... 15.0
UELP214-211D1 ..... 15.0
UELP214-212D1 ..... 15.0
UELP215D1 ..... 17.0
UELP215-215D1 ..... 17.0
UELP215-300D1 ..... 17.0

UELPL2 SERIES
UELPL204D1 ..... 1.5
UELPL204-012D1 ..... 1.5
UELPL205D1 ..... 1.8
UELPL205-013D1 ..... 1.8
UELPL205-014D1 ..... 1.8
UELPL205-015D1 ..... 1.8
UELPL205-100D1 ..... 1.8
UELPL206D1 ..... 3.1
UELPL206-101D1 ..... 3.1
UELPL206-102D1 ..... 3.1
UELPL206-103D1 ..... 3.1
UELPL206-104D1 ..... 3.1
UELPL207D1 ..... 3.7
UELPL207-104D1 ..... 3.7
UELPL207-105D1 ..... 3.7
UELPL207-106D1 ..... 3.7
UELPL207-107D1 ..... 3.7
UELPL209D1 ..... 5.1
UELPL209-110D1 ..... 5.1
UELPL209-111D1 ..... 5.1
UELPL209-112D1 ..... 5.1
UELPL210D1 ..... 6.0
UELPL210-113D1 ..... 6.0
UELPL210-114D1 ..... 6.0
UELPL210-115D1 ..... 6.0
UELPL210-200D1 ..... 6.0

UELP3 SERIES
UELP305D1 ..... 3.1
UELP305-014D1 ..... 3.1

Continued next page …

Bearing Series → **UCP2 SERIES**

UCP201D1 ..... 1.5

Complete Pillow Block Number

Weight (lbs)

NTN BEARING WEIGHTS

GREENLINE PILLOW BLOCKS — LBS.

UELP305-015D1 .....3.1
UELP305-100D1 .....3.1
UELP306D1.....4.2
UELP306-102D1 .....4.2
UELP306-103D1 .....4.2
UELP307D1.....6.4
UELP307-104D1 .....6.4
UELP307-105D1 .....6.4
UELP307-106D1 .....6.4
UELP307-107D1 .....6.4
UELP308D1.....6.8
UELP308-108D1 .....6.8
UELP309D1.....9.5
UELP309-110D1 .....9.5
UELP309-111D1 .....9.5
UELP309-112D1 .....9.5
UELP310D1.....13.0
UELP310-114D1 .....13.0
UELP310-115D1 .....13.0
UELP311D1.....17.0
UELP311-200D1 .....17.0
UELP311-202D1 .....17.0
UELP311-203D1 .....17.0
UELP312D1.....21.0
UELP312-204D1 .....21.0
UELP312-206D1 .....21.0
UELP312-207D1 .....21.0
UELP313D1.....24.0
UELP313-208D1 .....24.0
UELP314D1.....26.0
UELP314-211D1 .....26.0
UELP314-212D1 .....26.0
UELP315D1.....33.0
UELP315-215D1 .....33.0
UELP315-300D1 .....33.0
UELP316D1.....42.0
UELP316-302D1 .....42.0
UELP316-303D1 .....42.0
UELP317D1.....46.0
UELP317-304D1 .....46.0
UELP318D1.....55.0
UELP318-307D1 .....55.0
UELP318-308D1 .....55.0
UELP319D1.....66.0
UELP319-312D1 .....66.0
UELP320D1.....82.0
UELP320-315D1 .....82.0
UELP320-315D1 .....82.0
UELP320-400D1 .....82.0
UELP321D1.....82.0
UELP322D1.....106.0

JELPL2 SERIES

JELPL201 .....1.3
JELPL201-008 .....1.3
JELPL202 .....1.3
JELPL202-009 .....1.3
JELPL202-010 .....1.3
JELPL203 .....1.3
JELPL203-011 .....1.3
JELPL204 .....1.5
JELPL204-012 .....1.5
JELPL205 .....1.8
JELPL205-013 .....1.8
JELPL205-014 .....1.8
JELPL205-015 .....1.8
JELPL205-100 .....1.8
JELPL206 .....2.6
JELPL206-101 .....2.6
JELPL206-102 .....2.6
JELPL206-103 .....2.6
JELPL206-104 .....2.6
JELPL207 .....3.5
JELPL207-104 .....3.5
JELPL207-105 .....3.5
JELPL207-106 .....3.5
JELPL207-107 .....3.5

AELP2 SERIES

AELP204D1.....1.5
AELP204-012D1.....1.5
AELP205D1.....1.9
AELP205-013D1.....1.9
AELP205-014D1.....1.9
AELP205-015D1.....1.9
AELP205-100D1.....1.9
AELP206D1.....2.8
AELP206-101D1.....2.8
AELP206-102D1.....2.8
AELP206-103D1.....2.8
AELP206-104D1.....2.8
AELP207D1.....3.7
AELP207-104D1.....3.8
AELP207-105D1.....3.8
AELP207-106D1.....3.8
AELP207-107D1.....3.8
AELP208D1.....4.2
AELP208-108D1.....4.2
AELP208-109D1.....4.2
AELP209D1.....4.9
AELP209-110D1.....4.9
AELP209-111D1.....4.9
AELP209-112D1.....4.9
AELP210D1.....5.8
AELP210-113D1.....5.8
AELP210-114D1.....5.8
AELP210-115D1.....5.8

AELPL2 SERIES

AELPL201 .....1.3
AELPL201-008 .....1.3
AELPL202 .....1.3
AELPL202-009 .....1.3
AELPL202-010 .....1.3
AELPL203 .....1.3
AELPL203-011 .....1.3
AELPL204 .....1.5
AELPL204-012 .....1.5
AELPL205 .....1.8
AELPL205-013 .....1.8
AELPL205-014 .....1.8
AELPL205-015 .....1.8
AELPL205-100 .....1.8
AELPL206 .....2.6
AELPL206-101 .....2.6
AELPL206-102 .....2.6
AELPL206-103 .....2.6
AELPL206-104 .....2.6
AELPL207 .....3.5
AELPL207-104 .....3.5
AELPL207-105 .....3.5
AELPL207-106 .....3.5
AELPL207-107 .....3.5

AELPP2 SERIES

AELPP201 .....0.4
AELPP201-008.....0.4
AELPP202 .....0.4
AELPP202-009.....0.4
AELPP202-010.....0.4
AELPP203 .....0.4
AELPP203-011.....0.4
AELPP204 .....0.4
AELPP204-012.....0.4
AELPP205 .....0.7
AELPP205-013.....0.7
AELPP205-014.....0.7
AELPP205-015.....0.7
AELPP205-100.....0.7
AELPP206 .....1.1
AELPP206-101.....1.1
AELPP206-102.....1.1
AELPP206-103.....1.1
AELPP206-104.....1.1
AELPP207 .....1.5
AELPP207-104.....1.5
AELPP207-105.....1.5
AELPP207-106.....1.5
AELPP207-107.....1.5

UKP2 SERIES

UKP205D1:H2305X.....2.0
UKP205D1:HE2305.....2.0
UKP206D1:H2306X.....2.9
UKP206D1:HS2306.....2.9
UKP206D1:HE2306X 2.9
UKP207D1:H2307X.....3.7
UKP207D1:HS2307.....3.7
UKP208D1:HS2308X 4.4
UKP208D1:HE2308X 4.4
UKP208D1:HS2308X 4.4
UKP209D1:H2309X.....5.1
UKP209D1:HA2309.....5.1
UKP209D1:HE2309X 5.1
UKP209D1:HS2309X 5.1
UKP210D1:H2310X.....6.2
UKP210D1:HS2310.....6.2
UKP210D1:HA2310.....6.2
UKP210D1:HE2310X 6.2
UKP211D1:H2311X.....7.7
UKP211D1:HS2311.....7.7
UKP211D1:HA2311.....7.7
UKP211D1:HE2311XY.....7.7
UKP212D1:H2312X.....10.0
UKP212D1:HS2312.....10.0
UKP213D1:H2313X.....13.0
UKP213D1:HA2313X 13.0
UKP213D1:HE2313.....13.0
UKP213D1:HS2313.....13.0
UKP215D1:H2315X.....17.0
UKP215D1:HA2315.....17.0
UKP215D1:HE2315.....17.0
UKP216D1:H2316 .....21.0
UKP216D1:HA2316.....21.0
UKP216D1:HE2316.....21.0
UKP217D1:H2317X.....26.0
UKP217D1:HA2317.....26.0
UKP217D1:HE2317.....26.0
UKP218D1:H2318X.....31.0
UKP218D1:HA2318.....31.0

NTN

SERIES UCFL2

SET SCREW TYPE

Units: Millimeters
INCHES

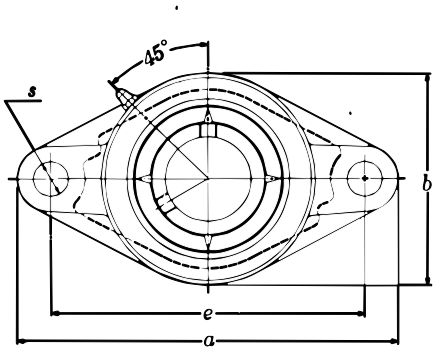

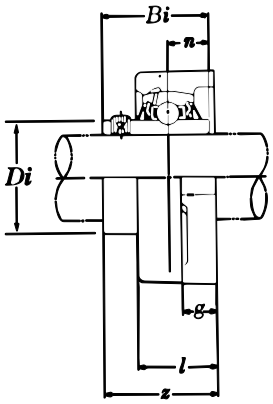

FLANGED UNITS - CAST HOUSING (TWO BOLT)

Shaft Dia.	Complete Flanged Unit Number	Nominal Dimensions									Bolt Size	Housing Number	Bearing Number	Basic Load Ratings (lbs)	
		a	*e*	*g*	*l*	*s*	*b*	*z*	*Bi*	*n*				*Dynamic C*	*Static C_o*
12 ½	UCFL201D1 **UCFL201-008D1**	113 4 7/16	90 3 35/64	11 7/16	25.5 1	12 15/32	60 2 3/8	33.3 1 5/16	31 1.220	12.7 .500	M10 5/16	FL204D1 **FL204D1**	UC201D1 **UC201-008D1**	**2,890**	**1,500**
15 9/16 5/8	UCFL202D1 **UCFL202-009D1** **UCFL202-010D1**	113 4 7/16	90 3 35/64	11 7/16	25.5 1	12 25/64	60 2 3/8	33.3 1 5/16	31 1.220	12.7 .500	M10 5/16	FL204D1 **FL204D1** **FL204D1**	UC202D1 **UC202-009D1** **UC202-010D1**	**2,890**	**1,500**
17 11/16	UCFL203D1 **UCFL203-011D1**	113 4 7/16	90 3 35/64	11 7/16	25.5 1	12 25/64	60 2 3/8	33.3 1 5/16	31 1.220	12.7 .500	M10 5/16	FL204D1 **FL204D1**	UC203D1 **UC203-011D1**	**2,890**	**1,500**
20 ¾	UCFL204D1 **UCFL204-012D1**	113 4 7/16	90 3 35/64	11 7/16	25.5 1	12 25/64	60 2 3/8	33.3 1 5/16	31 1.220	12.7 .500	M10 5/16	FL204D1 **FL204D1**	UC204D1 **UC204-012D1**	**2,890**	**1,500**
25 13/16 7/8 15/16 1	UCFL205D1 **UCFL205-013D1** **UCFL205-014D1** **UCFL205-015D1** **UCFL205-100D1**	130 5 1/8	99 3 57/64	13 ½	27 1 1/16	16 5/8	68 2 11/16	35.7 1 13/32	34 1.339	14.3 .563	M14 3/8	FL205D1 **FL205D1** **FL205D1** **FL205D1** **FL205D1**	UC205D1 **UC205-013D1** **UC205-014D1** **UC205-015D1** **UC205-100D1**	**3,150**	**1,770**
30 1 1/16 1 1/8 1 3/16 1 ¼	UCFL206D1 **UCFL206-101D1** **UCFL206-102D1** **UCFL206-103D1** **UCFL206-104D1**	148 5 13/16	117 4 39/64	13 ½	31 1 7/32	16 5/8	80 3 5/32	40.2 1 37/64	38.1 1.500	15.9 .626	M14 3/8	FL206D1 **FL206D1** **FL206D1** **FL206D1** **FL206D1**	UC206D1 **UC206-101D1** **UC206-102D1** **UC206-103D1** **UC206-104D1**	**4,400**	**2,540**
35 1 ¼ 1 5/16 1 3/8 1 7/16	UCFL207D1 **UCFL207-104D1** **UCFL207-105D1** **UCFL207-106D1** **UCFL207-107D1**	161 6 11/32	130 5 1/8	15 19/32	34 1 11/32	16 5/8	90 3 17/32	44.4 1 ¾	42.9 1.689	17.5 .689	M14 7/16	FL207D1 **FL207D1** **FL207D1** **FL207D1** **FL207D1**	UC207D1 **UC207-104D1** **UC207-105D1** **UC207-106D1** **UC207-107D1**	**5,750**	**3,440**
40 1 ½ 1 9/16	UCFL208D1 **UCFL208-108D1** **UCFL208-109D1**	175 6 7/8	144 5 43/64	15 19/32	36 1 13/32	16 5/8	100 3 15/16	51.2 2 1/64	49.2 1.937	19 .748	M14 7/16	FL208D1 **FL208D1** **FL208D1**	UC208D1 **UC208-108D1** **UC208-109D1**	**6,550**	**4,000**
45 1 5/8 1 11/16 1 ¾	UCFL209D1 **UCFL209-110D1** **UCFL209-111D1** **UCFL209-112D1**	188 7 13/32	148 5 53/64	16 5/8	38 1 ½	19 ¾	108 4 ¼	52.2 2 1/16	49.2 1.937	19 .748	M16 ½	FL209D1 **FL209D1** **FL209D1** **FL209D1**	UC209D1 **UC209-110D1** **UC209-111D1** **UC209-112D1**	**7,350**	**4,590**
50 1 13/16 1 7/8 1 15/16 2	UCFL210D1 **UCFL210-113D1** **UCFL210-114D1** **UCFL210-115D1** **UCFL210-200D1**	197 7 ¾	157 6 3/16	16 5/8	40 1 9/16	19 ¾	115 4 17/32	54.6 2 5/32	51.6 2.031	19 .748	M16 ½	FL210D1 **FL210D1** **FL210D1** **FL210D1** **FL210D1**	UC210D1 **UC210-113D1** **UC210-114D1** **UC210-115D1** **UC210-200D1**	**7,900**	**5,220**
55 2 2 1/16 2 1/8 2 3/16	UCFL211D1 **UCFL211-200D1** **UCFL211-201D1** **UCFL211-202D1** **UCFL211-203D1**	224 8 13/16	184 7 ¼	18 23/32	43 1 11/16	19 ¾	130 5 1/8	58.4 2 19/64	55.6 2.189	22.2 .874	M16 9/16	FL211D1 **FL211D1** **FL211D1** **FL211D1** **FL211D1**	UC211D1 **UC211-200D1** **UC211-201D1** **UC211-202D1** **UC211-203D1**	**9,750**	**6,570**
60 2 ¼ 2 3/8 2 7/16	UCFL212D1 **UCFL212-204D1** **UCFL212-206D1** **UCFL212-207D1**	250 9 27/32	202 7 61/64	18 23/32	48 1 7/8	23 29/32	140 5 ½	68.7 2 45/64	65.1 2.563	25.4 1.000	M20 ¾	FL212D1 **FL212D1** **FL212D1** **FL212D1**	UC212D1 **UC212-204D1** **UC212-206D1** **UC212-207D1**	**11,800**	**8,100**
65 2 ½	UCFL213D1 **UCFL213-208D1**	258 10 5/32	210 8 17/64	22 7/8	50 1 31/32	23 29/32	155 6 3/32	69.7 2 ¾	65.1 2.563	25.4 1.000	M20 ¾	FL213D1 **FL213D1**	UC213D1 **UC213-208D1**	**12,900**	**9,000**
70 2 11/16 2 ¾	UCFL214D1 **UCFL214-211D1** **UCFL214-212D1**	265 10 7/16	216 8 ½	22 7/8	54 2 1/8	23 29/32	160 6 5/16	75.4 2 31/32	74.6 2.937	30.2 1.189	M20 ¾	FL214D1 **FL214D1** **FL214D1**	UC214D1 **UC214-211D1** **UC214-212D1**	**14,000**	**9,900**
75 2 15/16 3	UCFL215D1 **UCFL215-215D1** **UCFL215-300D1**	275 10 13/16	225 8 55/64	22 7/8	56 2 7/32	23 29/32	165 6 ½	78.5 3 3/32	77.8 3.063	33.3 1.311	M20 ¾	FL215D1 **FL215D1** **FL215D1**	UC215D1 **UC215-215D1** **UC215-300D1**	**14,900**	**11,100**
80 3 1/8	UCFL216D1 **UCFL216-302D1**	290 11 13/32	233 9 11/64	22 7/8	58 2 9/32	25 63/64	180 7 3/32	83.3 3 9/32	82.6 3.252	33.3 1.311	M22 7/8	FL216D1 **FL216D1**	UC216D1 **UC216-302D1**	**16,300**	**11,900**
85 3 ¼	UCFL217D1 **UCFL217-304D1**	305 12	248 9 49/64	24 15/16	63 2 15/32	25 63/64	190 7 15/32	87.6 3 29/64	85.7 3.374	34.1 1.343	M22 7/8	FL217D1 **FL217D1**	UC217D1 **UC217-304D1**	**18,700**	**14,400**
90 3 ½	UCFL218D1 **UCFL218-308D1**	320 12 19/32	265 10 7/16	24 15/16	68 2 11/16	25 63/64	205 8 1/16	96.3 3 51/64	96 3.780	39.7 1.563	M22 7/8	FL218D1 **FL218D1**	UC218D1 **UC218-308D1**	**21,600**	**16,100**

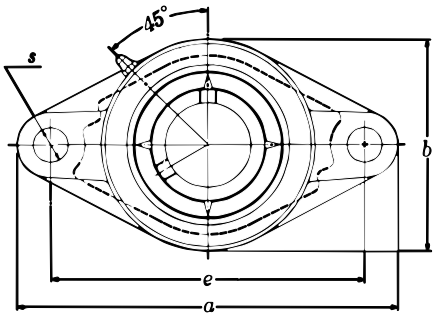

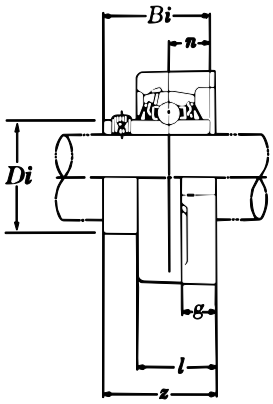

Units: Millimeters
INCHES

NTN

SERIES UCFL3

SET SCREW TYPE

FLANGED UNITS - CAST HOUSING (TWO BOLT)

Shaft Dia.	Complete Flanged Unit Number	Nominal Dimensions *a*	*e*	*g*	*l*	*s*	*b*	*z*	*Bi*	*n*	Bolt Size	Housing Number	Bearing Number	Basic Load Ratings (lbs) Dynamic C	Static C_o
25 7/8 15/16 1	UCFL305D1 **UCFL305-014D1** **UCFL305-015D1** **UCFL305-100D1**	150 5 29/32	113 4 7/16	13 1/2	29 1 5/32	19 3/4	80 3 5/32	39 1 17/32	38 1.496	15 .591	M16 5/8	FL305D1 **FL305D1** **FL305D1** **FL305D1**	UC305D1 **UC305-014D1** **UC305-015D1** **UC305-100D1**	4,750	2,460
30 1 1/8 1 3/16	UCFL306D1 **UCFL306-102D1** **UCFL306-103D1**	180 7 3/32	134 5 9/32	15 19/32	32 1 1/4	23 29/32	90 3 17/32	44 1 47/64	43 1.693	17 .669	M20 3/4	FL306D1 **FL306D1** **FL306D1**	UC306D1 **UC306-102D1** **UC306-103D1**	6,000	3,400
35 1 1/4 1 5/16 1 3/8 1 7/16	UCFL307D1 **UCFL307-104D1** **UCFL307-105D1** **UCFL307-106D1** **UCFL307-107D1**	185 7 9/32	141 5 32/64	16 5/8	36 1 13/32	23 29/32	100 3 15/16	49 1 59/64	48 1.890	19 .748	M20 3/4	FL307D1 **FL307D1** **FL307D1** **FL307D1** **FL307D1**	UC307D1 **UC307-104D1** **UC307-105D1** **UC307-106D1** **UC307-107D1**	7,500	4,300
40 1 1/2	UCFL308D1 **UCFL308-108D1**	200 7 7/8	158 6 7/32	17 21/32	40 1 9/16	23 29/32	112 4 13/32	56 2 13/64	52 2.047	19 .748	M20 3/4	FL308D1 **FL308D1**	UC308D1 **UC308-108D1**	9,150	5,400
45 1 5/8 1 11/16 1 3/4	UCFL309D1 **UCFL309-110D1** **UCFL309-111D1** **UCFL309-112D1**	230 9 1/16	177 6 31/32	18 23/32	44 1 23/32	25 63/64	125 4 29/32	60 2 23/64	57 2.244	22 .866	M22 7/8	FL309D1 **FL309D1** **FL309D1** **FL309D1**	UC309D1 **UC309-110D1** **UC309-111D1** **UC309-112D1**	11,900	7,200
50 1 7/8 1 15/16	UCFL310D1 **UCFL310-114D1** **UCFL310-115D1**	240 9 7/16	187 7 23/64	19 3/4	48 1 7/8	25 63/64	140 5 1/2	67 2 41/64	61 2.402	22 .866	M22 7/8	FL310D1 **FL310D1** **FL310D1**	UC310D1 **UC310-114D1** **UC310-115D1**	13,900	8,600
55 2 2 1/8 2 3/16	UCFL311D1 **UCFL311-200D1** **UCFL311-202D1** **UCFL311-203D1**	250 9 27/32	198 7 51/64	20 25/32	52 2 1/16	25 63/64	150 5 29/32	71 2 51/64	66 2.598	25 .984	M22 7/8	FL311D1 **FL311D1** **FL311D1** **FL311D1**	UC311D1 **UC311-200D1** **UC311-202D1** **UC311-203D1**	16,100	10,100
60 2 1/4 2 3/8 2 7/16	UCFL312D1 **UCFL312-204D1** **UCFL312-206D1** **UCFL312-207D1**	270 10 5/8	212 8 11/32	22 7/8	56 2 7/32	31 1 7/32	160 6 5/16	78 3 5/64	71 2.795	26 1.024	M27 1	FL312D1 **FL312D1** **FL312D1** **FL312D1**	UC312D1 **UC312-204D1** **UC312-206D1** **UC312-207D1**	18,400	11,700
65 2 1/2	UCFL313D1 **UCFL313-208D1**	295 11 5/8	240 9 29/64	25 31/32	58 2 9/32	31 1 7/32	175 6 7/8	78 3 5/64	75 2.953	30 1.181	M27 1	FL313D1 **FL313D1**	UC313D1 **UC313-208D1**	20,800	13,400
70 2 11/16 2 3/4	UCFL314D1 **UCFL314-211D1** **UCFL314-212D1**	315 12 13/32	250 9 27/32	28 1 3/32	61 2 13/32	35 1 3/8	185 7 9/32	81 3 3/16	78 3.071	33 1.299	M30 1 1/8	FL314D1 **FL314D1** **FL314D1**	UC314D1 **UC314-211D1** **UC314-212D1**	23,400	15,300
75 2 15/16 3	UCFL315D1 **UCFL315-215D1** **UCFL315-300D1**	320 12 19/32	260 10 15/64	30 1 3/16	66 2 19/32	35 1 3/8	195 7 11/16	89 3 1/2	82 3.228	32 1.260	M30 1 1/8	FL315D1 **FL315D1** **FL315D1**	UC315D1 **UC315-215D1** **UC315-300D1**	25,500	17,400
80 3 1/8 3 3/16	UCFL316D1 **UCFL316-302D1** **UCFL316-303D1**	355 13 31/32	285 11 7/32	32 1 1/4	68 2 11/16	38 1 1/2	210 8 9/32	90 3 35/64	86 3.386	34 1.339	M33 1 1/4	FL315D1 **FL316D1** **FL316D1**	UC316D1 **UC316-302D1** **UC316-303D1**	27,600	19,500
85 3 1/4	UCFL317D1 **UCFL317-304D1**	370 14 9/16	300 11 13/16	32 1 1/4	74 2 29/32	38 1 1/2	220 8 21/32	100 3 15/16	96 3.780	40 1.575	M33 1 1/4	FL317D1 **FL317D1**	UC317D1 **UC317-304D1**	29,800	21,800
90 3 7/16 3 1/2	UCFL318D1 **UCFL318-307D1** **UCFL318-308D1**	385 15 5/32	315 12 13/32	36 1 13/32	76 3	38 1 1/2	235 9 1/4	100 3 15/16	96 3.780	40 1.575	M33 1 1/4	FL318D1 **FL318D1** **FL318D1**	UC318D1 **UC318-307D1** **UC318-308D1**	32,000	24,100
95 3 3/4	UCFL319D1 **UCFL319-312D1**	405 15 15/16	330 13	40 1 9/16	94 3 11/16	41 1 39/64	250 9 27/32	121 4 49/64	103 4.055	41 1.614	M36 1 3/8	FL319D1 **FL319D1**	UC319D1 **UC319-312D1**	34,500	26,600
100 3 15/16 4	UCFL320D1 **UCFL320-315D1** **UCFL320-400D1**	440 17 5/16	360 14 11/64	40 2 21/64	94 3 11/16	44 1 47/64	270 10 5/8	125 4 59/64	108 4.252	42 1.654	M39 1 1/2	FL320D1 **FL320D1** **FL320D1**	UC320D1 **UC320-315D1** **UC320-400D1**	39,000	31,500
105	UCFL321D1	440	360	40	94	44	270	127	112	44	M39	FL321D1	UC321D1	41,500	34,500
110	UCFL322D1	470	390	42	96	44	300	131	117	46	M39	FL322D1	UC322D1	46,000	40,500
120	UCFL324D1	520	430	48	110	47	330	140	126	51	M42	FL324D1	UC324D1	46,500	41,500
130	UCFL326D1	550	460	50	115	47	360	146	135	54	M42	FL326D1	UC326D1	51,500	48,000
140	UCFL328D1	600	500	60	125	51	400	161	145	59	M45	FL328D1	UC328D1	57,000	55,500

SERIES UCFLX

SET SCREW TYPE

Units: Millimeters
INCHES

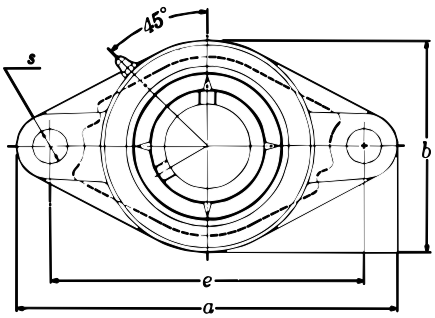

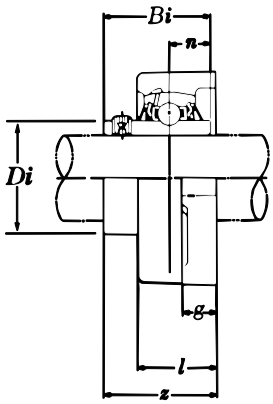

FLANGED UNITS - CAST HOUSING (TWO BOLT)

Shaft Dia.	Complete Flanged Unit Number	Nominal Dimensions *a*	*e*	*g*	*l*	*s*	*b*	*z*	*Bi*	*n*	Bolt Size	Housing Number	Bearing Number	Basic Load Ratings (lbs) *Dynamic C*	*Static C_o*
25	UCFLX05D1	141	117	13	30	12	83	40.2	38.1	15.9	M10	FLX05D1	UCX05D1	**4,390**	**2,540**
13/16	**UCFLX05-013D1**	5 9/16	4 39/64	1/2	1 3/16	15/32	3 9/32	1 37/64	1.500	.626	3/8	**FLX05D1**	**UCX05-013D1**		
7/8	**UCFLX05-014D1**											**FLX05D1**	**UCX05-014D1**		
15/16	**UCFLX05-015D1**											**FLX05D1**	**UCX05-015D1**		
1	**UCFLX05-100D1**											**FLX05D1**	**UCX05-100D1**		
30	UCFLX06D1	156	130	15	34	16	95	44.4	42.9	17.5	M14	FLX06D1	UCX06D1	**5,780**	**3,440**
1 1/16	**UCFLX06-101D1**	6 5/32	5 1/8	19/32	1 11/32	5/8	3 3/4	1 3/4	1.689	.689	1/2	**FLX06D1**	**UCX06-101D1**		
1 1/8	**UCFLX06-102D1**											**FLX06D1**	**UCX06-102D1**		
1 3/16	**UCFLX06-103D1**											**FLX06D1**	**UCX06-103D1**		
1 1/4	**UCFLX06-104D1**											**FLX06D1**	**UCX06-104D1**		
35	UCFLX07D1	171	144	16	38	16	105	51.2	49.2	19	M14	FLX07D1	UCX07D1	**6,550**	**4,000**
1 5/16	**UCFLX07-105D1**	6 23/32	5 43/64	5/8	1 1/2	5/8	4 1/8	2 1/64	1.937	.748	1/2	**FLX07D1**	**UCX07-105D1**		
1 3/8	**UCFLX07-106D1**											**FLX07D1**	**UCX07-106D1**		
1 7/16	**UCFLX07-107D1**											**FLX07D1**	**UCX07-107D1**		
40	UCFLX08D1	179	148	16	40	16	111	52.2	49.2	19	M14	FLX08D1	UCX08D1	**7,310**	**4,590**
1 1/2	**UCFLX08-108D1**	7 1/16	5 53/64	5/8	1 9/16	5/8	4 3/8	2 1/16	1.937	.748	1/2	**FLX08D1**	**UCX08-108D1**		
1 9/16	**UCFLX08-109D1**											**FLX08D1**	**UCX08-109D1**		
45	UCFLX09D1	189	157	16	40	16	116	55.6	51.6	19	M14	FLX09D1	UCX09D1	**7,870**	**5,220**
1 5/8	**UCFLX09-110D1**	7 7/16	6 3/16	5/8	1 9/16	5/8	4 9/16	2 3/16	2.031	.748	1/2	**FLX09D1**	**UCX09-110D1**		
1 11/16	**UCFLX09-111D1**											**FLX09D1**	**UCX09-111D1**		
1 3/4	**UCFLX09-112D1**											**FLX09D1**	**UCX09-112D1**		
1 13/16	**UCFLX09-113D1**											**FLX09D1**	**UCX09-113D1**		
50	UCFLX10D1	216	184	18	44	19	133	59.4	55.6	22.2	M16	FLX10D1	UCX10D1	**9,780**	**6,570**
1 7/8	**UCFLX10-114D1**	8 1/2	7 1/4	23/32	1 23/32	3/4	5 1/4	2 11/32	2.189	.874	5/8	**FLX10D1**	**UCX10-114D1**		
1 15/16	**UCFLX10-115D1**											**FLX10D1**	**UCX10-115D1**		
2	**UCFLX10-200D1**											**FLX10D1**	**UCX10-200D1**		

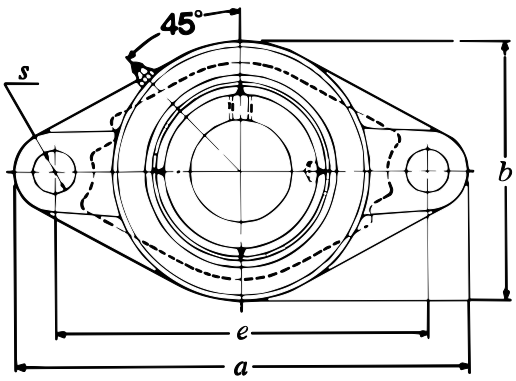

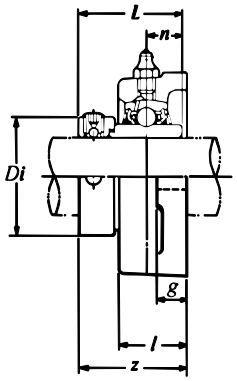

Units: Millimeters
INCHES

NTN

SERIES UELFL2

ECCENTRIC LOCKING COLLAR TYPE

FLANGED UNITS - CAST HOUSING (TWO BOLT)

Shaft Dia.	Complete Flanged Unit Number	Nominal Dimensions									Bolt Size	Housing Number	Bearing Number	Basic Load Ratings (lbs)	
		a	*e*	*g*	*l*	*s*	*z*	*Bi*	*Di*	*n*				*Dynamic C*	*Static C_o*
20 ¾	UELFL204D1 **UELFL204-012D1**	113 **4 7/16**	90 **3 35/64**	11 **7/16**	25.5 **1**	12 **15/32**	41.6 **1 41/64**	43.7 **1.720**	33 **1.299**	17.1 **.673**	M10 **5/16**	FL204D1 **FL204D1**	UEL204D1 **UEL204-012D1**	**2,890**	**1,500**
25 13/16 ⅞ 15/16 1	UELFL205D1 **UELFL205-013D1** **UELFL205-014D1** **UELFL205-015D1** **UELFL205-100D1**	130 **5 ⅛**	99 **3 57/64**	13 **½**	27 **1 1/16**	16 **⅝**	42.9 **1 11/16**	44.4 **1.748**	38 **1.496**	17.5 **.689**	M14 **⅜**	FL205D1 **FL205D1** **FL205D1** **FL205D1** **FL205D1**	UEL205D1 **UEL205-013D1** **UEL205-014D1** **UEL205-015D1** **UEL205-100D1**	**3,150**	**1,770**
30 1 1/16 1 ⅛ 1 3/16 1 ¼	UELFL206D1 **UELFL206-101D1** **UELFL206-102D1** **UELFL206-103D1** **UELFL206-104D1**	148 **5 13/16**	117 **4 9/64**	13 **½**	31 **1 7/32**	16 **⅝**	48.1 **1 57/64**	48.4 **1.906**	44.5 **1.752**	18.3 **.720**	M14 **⅜**	FL206D1 **FL206D1** **FL206D1** **FL206D1** **FL206D1**	UEL206D1 **UEL206-101D1** **UEL206-102D1** **UEL206-103D1** **UEL206-104D1**	**4,400**	**2,540**
35 1 ¼ 1 5/16 1 ⅜ 1 7/16	UELFL207D1 **UELFL207-104D1** **UELFL207-105D1** **UELFL207-106D1** **UELFL207-107D1**	161 **6 11/32**	130 **5 ⅛**	15 **19/32**	34 **1 11/32**	16 **⅝**	51.3 **2 1/64**	51.1 **2.012**	55.5 **2.185**	18.8 **.740**	M14 **7/16**	FL207D1 **FL207D1** **FL207D1** **FL207D1** **FL207D1**	UEL207D1 **UEL207-104D1** **UEL207-105D1** **UEL207-106D1** **UEL207-107D1**	**5,750**	**3,440**
40 1 ½ 1 9/16	UELFL208D1 **UELFL208-108D1** **UELFL208-109D1**	175 **6 ⅞**	144 **5 43/64**	15 **19/32**	36 **1 13/32**	16 **⅝**	55.9 **2 13/64**	56.3 **2.217**	60 **2.362**	21.4 **.843**	M14 **7/16**	FL207D1 **FL208D1** **FL208D1**	UEL208D1 **UEL208-108D1** **UEL208-109D1**	**6,550**	**4,000**
45 1 ⅝ 1 11/16 1 ¾	UELFL209D1 **UELFL209-110D1** **UELFL209-111D1** **UELFL209-112D1**	188 **7 13/32**	148 **5 53/64**	16 **⅝**	38 **1 ½**	19 **¾**	56.9 **2 15/64**	56.3 **2.217**	63.5 **2.500**	21.4 **.843**	M16 **½**	FL209D1 **FL209D1** **FL209D1** **FL209D1**	UEL209D1 **UEL209-110D1** **UEL209-111D1** **UEL209-112D1**	**7,350**	**4,590**
50 1 13/16 1 ⅞ 1 15/16 2	UELFL210D1 **UELFL210-113D1** **UELFL210-114D1** **UELFL210-115D1** **UELFL210-200D1**	197 **7 ¾**	157 **6 3/16**	16 **⅝**	40 **1 9/16**	19 **¾**	60.1 **2 23/64**	62.7 **2.469**	69.5 **2.736**	24.6 **.969**	M16 **½**	FL210D1 **FL210D1** **FL210D1** **FL210D1** **FL210D1**	UEL210D1 **UEL210-113D1** **UEL210-114D1** **UEL210-115D1** **UEL210-200D1**	**7,900**	**5,220**
55 2 2 1/16 2 ⅛ 2 3/16	UELFL211D1 **UELFL211-200D1** **UELFL211-201D1** **UELFL211-202D1** **UELFL211-203D1**	224 **8 13/16**	184 **7 ¼**	18 **23/32**	43 **1 11/16**	19 **¾**	68.6 **2 45/64**	71.4 **2.811**	76 **2.992**	27.8 **1.094**	M16 **9/16**	FL211D1 **FL211D1** **FL211D1** **FL211D1** **FL211D1**	UEL211D1 **UEL211-200D1** **UEL211-201D1** **UEL211-202D1** **UEL211-203D1**	**9,750**	**6,570**
60 2 ¼ 2 ⅜ 2 7/16	UELFL212D1 **UELFL212-204D1** **UELFL212-206D1** **UELFL212-207D1**	250 **9 27/32**	202 **7 61/64**	18 **23/32**	48 **1 ⅞**	23 **29/32**	75.8 **2 63/64**	77.8 **3.063**	84 **3.307**	31 **1.220**	M20 **¾**	FL212D1 **FL212D1** **FL212D1** **FL212D1**	UEL212D1 **UEL212-204D1** **UEL212-206D1** **UEL212-207D1**	**11,800**	**8,100**
65 2 ½	UELFL213D1 **UELFL213-208D1**	258 **10 5/32**	210 **8 17/64**	22 **⅞**	50 **1 31/32**	23 **29/32**	81.55 **3 13/64**	85.7 **3.374**	97 **3.819**	34.15 **1.344**	M20 **¾**	FL213D1 **FL213D1**	UEL213D1 **UEL213-208D1**	**12,900**	**9,000**
70 2 11/16 2 ¾	UELFL214D1 **UELFL214-211D1** **UELFL214-212D1**	265 **10 7/16**	216 **8 ½**	22 **⅞**	54 **2 ⅛**	23 **29/32**	82.55 **3 ¼**	85.7 **3.374**	97 **3.819**	34.15 **1.344**	M20 **¾**	FL214D1 **FL214D1** **FL214D1**	UEL214D1 **UEL214-211D1** **UEL214-212D1**	**14,000**	**9,900**
75 2 15/16 3	UELFL215D1 **UELFL215-215D1** **UELFL215-300D1**	275 **10 13/16**	225 **8 55/64**	22 **⅞**	56 **2 7/32**	23 **29/32**	88.7 **3 31/64**	92 **3.622**	102 **4.016**	37.3 **1.469**	M20 **¾**	FL215D1 **FL215D1** **FL215D1**	UEL215D1 **UEL215-215D1** **UEL215-300D1**	**14,900**	**11,130**

NTN

SERIES UELFL3

ECCENTRIC LOCKING COLLAR TYPE

Units: Millimeters
INCHES

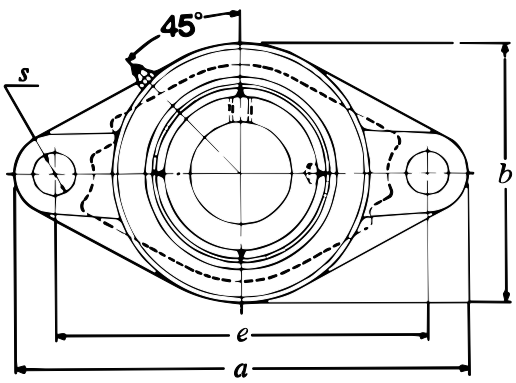

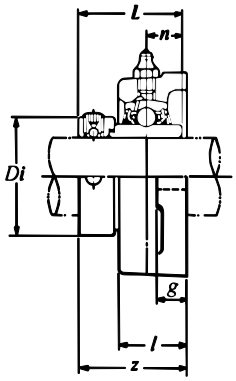

FLANGED UNITS - CAST HOUSING (TWO BOLT)

Shaft Dia.	Complete Flanged Unit Number	Nominal Dimensions									Bolt Size	Housing Number	Bearing Number	Basic Load Ratings (lbs)	
		a	*e*	*g*	*l*	*s*	*z*	*Bi*	*Di*	*n*				*Dynamic C*	*Static C_o*
25	UELFL305D1	150	113	13	29	19	46.1	46.8	42.8	16.7	M16	FL305D1	UEL305D1	4,750	2,460
7/8	UELFL305-014D1	5 29/32	4 29/64	1/2	1 5/32	3/4	1 13/16	1.843	1.685	.657	5/8	FL305D1	UEL305-014D1		
15/16	UELFL305-015D1											FL305D1	UEL305-015D1		
1	UELFL305-100D1											FL305D1	UEL305-100D1		
30	UELFL306D1	180	134	15	32	23	50.5	50	50	17.5	M20	FL306D1	UEL306D1	6,000	3,400
1 1/8	UELFL306-102D1	7 3/32	5 9/32	19/32	1 1/4	29/32	1 63/64	1.969	1.969	.689	3/4	FL306D1	UEL306-102D1		
1 3/16	UELFL306-103D1											FL306D1	UEL306-103D1		
35	UELFL307D1	185	141	16	36	23	53.3	51.6	55	18.3	M20	FL307D1	UEL307D1	7,500	4,300
1 1/4	UELFL307-104D1	7 9/32	5 35/64	5/8	1 13/32	29/32	2 3/32	2.031	2.165	.720	3/4	FL307D1	UEL307-104D1		
1 5/16	UELFL307-105D1											FL307D1	UEL307-105D1		
1 3/8	UELFL307-106D1											FL307D1	UEL307-106D1		
1 7/16	UELFL307-107D1											FL307D1	UEL307-107D1		
40	UELFL308D1	200	158	17	40	23	60.3	57.1	63.5	19.8	M20	FL308D1	UEL308D1	9,150	5,400
1 1/2	UELFL308-108D1	7 7/8	6 7/32	21/32	1 9/16	29/32	3 3/8	2.248	2.500	.780	3/4	FL308D1	UEL308-108D1		
45	UELFL309D1	230	177	18	44	25	63.9	58.7	70	19.8	M22	FL309D1	UEL309D1	11,900	7,200
1 5/8	UELFL309-110D1	9 1/16	6 31/32	23/32	1 23/32	63/64	2 33/64	2.311	2.756	.780	7/8	FL309D1	UEL309-110D1		
1 11/16	UELFL309-111D1											FL309D1	UEL309-111D1		
1 3/4	UELFL309-112D1											FL309D1	UEL309-112D1		
50	UELFL310D1	240	187	19	48	25	70	66.6	76.2	24.6	M22	FL310D1	UEL310D1	13,900	8,600
1 7/8	UELFL310-114D1	9 7/16	7 23/64	3/4	1 7/8	63/64	2 3/4	2.622	3.000	.969	7/8	FL310D1	UEL310-114D1		
1 15/16	UELFL310-115D1											FL310D1	UEL310-115D1		
55	UELFL311D1	250	198	20	52	25	75.2	73	83	27.8	M22	FL311D1	UEL311D1	16,100	10,100
2	UELFL311-200D1	9 27/32	7 51/64	25/32	2 1/16	63/64	2 61/64	2.874	3.268	1.094	7/8	FL311D1	UEL311-200D1		
2 1/8	UELFL311-202D1											FL311D1	UEL311-202D1		
2 3/16	UELFL311-203D1											FL311D1	UEL311-203D1		
60	UELFL312D1	270	212	22	56	31	81.45	79.4	89	30.95	M27	FL312D1	UEL312D1	18,400	11,700
2 1/4	UELFL312-204D1	10 5/8	8 11/32	7/8	2 7/32	1 7/32	3 13/64	3.126	3.504	1.219	1	FL312D1	UEL312-204D1		
2 3/8	UELFL312-206D1											FL312D1	UEL312-206D1		
2 7/16	UELFL312-207D1											FL312D1	UEL312-207D1		
65	UELFL313D1	295	240	25	58	31	86.15	85.7	97	32.55	M27	FL313D1	UEL313D1	20,800	13,400
2 1/2	UELFL313-208D1	11 5/8	9 29/64	31/32	2 9/32	1 7/32	3 25/64	3.374	3.819	1.281	1	FL313D1	UEL313-208D1		
70	UELFL314D1	315	250	28	61	35	93.95	92.1	102	34.15	M30	FL314D1	UEL314D1	23,400	15,300
2 11/16	UELFL314-211D1	12 13/32	9 27/32	1 3/32	2 13/32	1 3/8	3 45/64	3.626	4.016	1.344	1 1/8	FL314D1	UEL314-211D1		
2 3/4	UELFL314-212D1											FL314D1	UEL314-212D1		
75	UELFL315D1	320	260	30	66	35	101.7	100	113	37.3	M30	FL315D1	UEL315D1	25,500	17,400
2 15/16	UELFL315-215D1	12 19/32	10 15/16	1 3/16	2 19/32	1 3/8	4	3.937	4.449	1.469	1 1/8	FL315D1	UEL315-215D1		
3	UELFL315-300D1											FL315D1	UEL315-300D1		
80	UELFL316D1	355	285	32	68	38	103.9	106.4	119	40.5	M33	FL316D1	UEL316D1	27,600	19,500
3 1/8	UELFL316-302D1	13 31/32	11 7/32	1 1/4	2 11/16	1 1/2	4 3/32	4.189	4.685	1.594	1 1/4	FL316D1	UEL316-302D1		
3 3/16	UELFL316-303D1											FL316D1	UEL316-303D1		
85	UELFL317D1	370	300	32	74	38	111.45	109.5	127	42.05	M33	FL317D1	UEL317D1	29,800	21,800
3 1/4	UELFL317-304D1	14 9/16	11 13/16	1 1/4	2 29/32	1 1/2	4 25/64	4.311	5.000	1.656	1 1/4	FL317D1	UEL317-304D1		
90	UELFL318D1	385	315	36	76	38	116.25	115.9	133	43.65	M33	FL318D1	UEL318D1	32,000	24,100
3 7/16	UELFL318-307D1	15 5/32	12 63/64	1 13/32	3	1 1/2	4 37/64	4.563	5.236	1.719	1 1/4	FL318D1	UEL318-307D1		
3 1/2	UELFL318-308D1											FL318D1	UEL318-308D1		
95	UELFL319D1	405	330	40	94	41	142.4	122.3	140	38.9	M36	FL319D1	UEL319D1	34,500	26,600
3 3/4	UELFL319-312D1	15 15/16	13	1 9/16	3 11/16	1 39/64	5 39/64	4.815	5.512	1.531	1 3/8	FL319D1	UEL319-312D1		
100	UELFL320D1	440	360	40	94	44	137.6	128.6	146	50	M39	FL320D1	UEL320D1	39,000	31,500
3 15/16	UELFL320-315D1	17 5/16	14 11/64	1 9/16	3 11/16	1 47/64	5 27/64	5.063	5.748	1.969	1 1/2	FL320D1	UEL320-315D1		
4	UELFL320-400D1											FL320D1	UEL320-400D1		
105	UELFL321D1	440	360	40	94	44	150.3	139.7	157	48.4	M39	FL321D1	UEL321D1	41,500	34,500
110	UELFL322D1	470	390	42	96	44	152.1	141.3	168	49.2	M39	FL322D1	UEL322D1	46,000	40,500

Units: Millimeters
INCHES

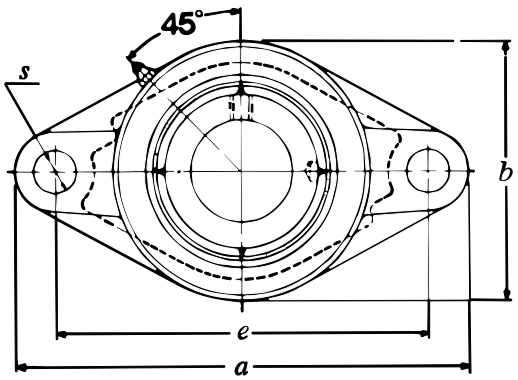

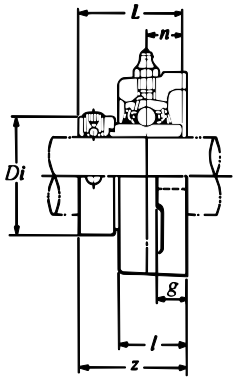

NTN

SERIES UELFLU2

ECCENTRIC LOCKING COLLAR TYPE

FLANGED UNITS - CAST HOUSING (TWO BOLT)

Shaft Dia.	Complete Flanged Unit Number	Nominal Dimensions										Bolt Size	Housing Number	Bearing Number	Basic Load Ratings (lbs)	
		a	*e*	*g*	*l*	*s*	*b*	*z*	*L*	*Di*	*n*				*Dynamic C*	*Static C_o*
20 3/4	UELFLU204D1 **UELFLU204-012D1**	113 4 7/16	90 3 35/64	15 19/32	29.5 1 5/32	11.5 29/64	61 2 13/32	45.6 1 51/64	43.7 1.720	33.3 1.31	17.1 .673	M10 5/16	FLU204D1 **FLU204D1**	UEL204D1 **UEL204-012D1**	**2,890**	**1,500**
25 13/16 7/8 15/16 1	UELFLU205D1 **UELFLU205-013D1** **UELFLU205-014D1** **UELFLU205-015D1** **UELFLU205-100D1**	125 4 29/32	99 3 57/64	15 19/32	30 1 3/16	11.5 29/64	70 2 3/4	45.9 1 13/16	44.4 1.748	38.1 1.50	17.5 .689	M10 3/8	FLU205D1 **FLU205D1** **FLU205D1** **FLU205D1** **FLU205D1**	UEL205D1 **UEL205-013D1** **UEL205-014D1** **UEL205-015D1** **UEL205-100D1**	**3,150**	**1,770**
30 1 1/16 1 1/8 1 3/16 1 1/4	UELFLU206D1 **UELFLU206-101D1** **UELFLU206-102D1** **UELFLU206-103D1** **UELFLU206-104D1**	142 5 19/32	116.5 4 19/32	16 5/8	33 1 5/16	11.5 29/64	83 3 9/32	50.1 1 31/32	48.4 1.906	44.5 1.75	18.3 .720	M10 3/8	FLU206D1 **FLU206D1** **FLU206D1** **FLU206D1** **FLU206D1**	UEL206D1 **UEL206-101D1** **UEL206-102D1** **UEL206-103D1** **UEL206-104D1**	**4,400**	**2,540**
35 1 1/4 1 5/16 1 3/8 1 7/16	UELFLU207D1 **UELFLU207-104D1** **UELFLU207-105D1** **UELFLU207-106D1** **UELFLU207-107D1**	156 6 5/32	130 5 1/8	17 21/32	36 1 13/32	14 35/64	96 3 25/32	53.3 2 3/32	51.1 2.012	55.6 2.19	18.8 .740	M12 7/16	FLU207D1 **FLU207D1** **FLU207D1** **FLU207D1** **FLU207D1**	UEL207D1 **UEL207-104D1** **UEL207-105D1** **UEL207-106D1** **UEL207-107D1**	**5,750**	**3,440**
40 1 1/2 1 9/16	UELFLU208D1 **UELFLU208-108D1** **UELFLU208-109D1**	172 6 25/32	143.5 5 21/32	17 21/32	39 1 17/32	14 35/64	105 4 1/8	58.9 2 5/16	56.3 2.217	60.2 2.37	21.4 .843	M12 7/16	FLU208D1 **FLU208D1** **FLU208D1**	UEL208D1 **UEL208-108D1** **UEL208-109D1**	**6,550**	**4,000**
45 1 5/8 1 11/16 1 3/4	UELFLU209D1 **UELFLU209-110D1** **UELFLU209-111D1** **UELFLU209-112D1**	180 7 3/32	148.5 5 27/32	18 23/32	40 1 9/16	16 5/8	111 4 3/8	58.9 2 5/16	56.3 2.217	63.5 2.50	21.4 .843	M14 1/2	FLU209D1 **FLU209D1** **FLU209D1** **FLU209D1**	UEL209D1 **UEL209-110D1** **UEL209-111D1** **UEL209-112D1**	**7,350**	**4,590**
50 1 13/16 1 7/8 1 15/16 2	UELFLU210D1 **UELFLU210-113D1** **UELFLU210-114D1** **UELFLU210-115D1** **UELFLU210-200D1**	190 7 15/32	157 6 3/16	20 25/32	46 1 13/16	18 45/64	116 4 9/16	66.1 2 39/64	62.7 2.469	69.9 2.75	24.6 .969	M16 1/2	FLU210D1 **FLU210D1** **FLU210D1** **FLU210D1** **FLU210D1**	UEL210D1 **UEL210-113D1** **UEL210-114D1** **UEL210-115D1** **UEL210-200D1**	**7,900**	**5,220**
55 2 2 1/16 2 1/8 2 3/16	UELFLU211D1 **UELFLU211-200D1** **UELFLU211-201D1** **UELFLU211-202D1** **UELFLU211-203D1**	217 8 17/32	184 7 1/4	21 13/16	49 1 15/16	18 45/64	134 5 9/32	74.6 2 15/16	71.4 2.811	76.2 3.00	27.8 1.094	M16 9/16	FLU211D1 **FLU211D1** **FLU211D1** **FLU211D1** **FLU211D1**	UEL211D1 **UEL211-200D1** **UEL211-201D1** **UEL211-202D1** **UEL211-203D1**	**9,750**	**6,570**
60 2 1/4 2 3/8 2 7/16	UELFLU212D1 **UELFLU212-204D1** **UELFLU212-206D1** **UELFLU212-207D1**	235 9 1/4	202 7 61/64	21 13/16	53 2 3/32	18 45/64	138 5 7/16	80.8 3 3/16	77.8 3.063	84.1 3.31	31 1.220	M16 9/16	FLU212D1 **FLU212D1** **FLU212D1** **FLU212D1**	UEL212D1 **UEL212-204D1** **UEL212-206D1** **UEL212-207D1**	**11,800**	**8,100**
65 2 1/2	UELFLU213D1 **UELFLU213-208D1**	248 9 3/4	210 8 17/64	22 7/8	59 2 5/16	20.5 13/16	152 5 31/32	89.55 3 17/32	85.7 3.374	97.0 3.82	34.15 1.344	M18 5/8	FLU213D1 **FLU213D1**	UEL213D1 **UEL213-208D1**	**12,900**	**9,000**
70 2 11/16 2 3/4	UELFLU214D1 **UELFLU214-211D1** **UELFLU214-212D1**	257 10 1/8	216 8 1/2	22 7/8	62 2 7/16	20.5 13/16	159 6 1/4	89.55 3 17/32	85.7 3.374	97.0 3.82	34.15 1.344	M18 5/8	FLU214D1 **FLU214D1** **FLU214D1**	UEL214D1 **UEL214-211D1** **UEL214-212D1**	**14,000**	**9,900**
75 2 15/16 3	UELFLU215D1 **UELFLU215-215D1** **UELFLU215-300D1**	266 10 15/32	225 8 55/64	22 7/8	65 2 9/16	20.5 13/16	165 6 1/2	95.7 3 49/64	92 3.622	102 4.02	37.3 1.469	M18 5/8	FLU215D1 **FLU215D1** **FLU215D1**	UEL215D1 **UEL215-215D1** **UEL215-300D1**	**14,900**	**11,130**

SERIES AELFL2

ECCENTRIC LOCKING COLLAR RELUBE TYPE

Units: Millimeters
INCHES

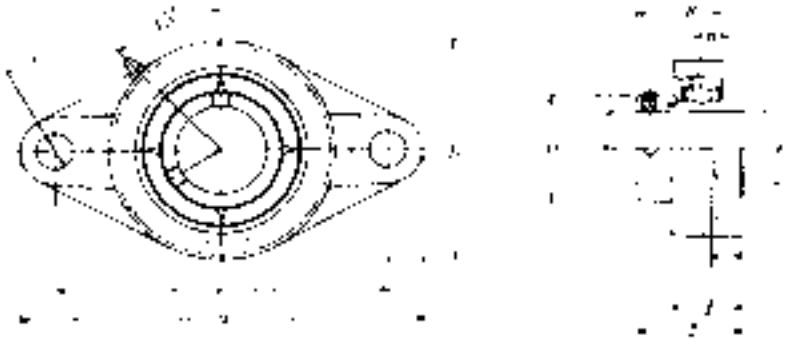

Flanged Units - Cast Housing (2 Bolt)

Shaft Dia.	Complete Pillow Block Number	Nominal Dimensions									Bolt Size	Housing Number	Bearing Number	Basic Load Ratings (lbs)	
		a	*e*	*g*	*l*	*s*	*z*	*Bi*	*Di*	*n*				*Dynamic C*	*Static C_0*
20	AELFL204D1	113	90	11	25.5	12	38.5	31	33.3	7.5	M10	FL204D1	AEL204D1	2,890	1,500
3/4	AELFL204-012D1	4 7/16	3 17/32	7/16	1	15/32	1 33/64	1.219	1.31	0.295	3/8	FL204D1	AEL204-012D1		
25	AELFL205D1	130	99	13	27	16	40	31	38.1	7.5	M14	FL205D1	AEL205D1	3,150	1,770
13/16	AELFL205-013D1	5 1/8	3 29/32	1/2	1 1/16	5/8	1 9/16	1.219	1.50	0.295	1/2	FL205D1	AEL205-013D1		
7/8	AELFL205-014D1											FL205D1	AEL205-014D1		
15/16	AELFL205-015D1											FL205D1	AEL205-015D1		
1	AELFL205-100D1											FL205D1	AEL205-100D1		
30	AELFL206D1	148	117	13	31	16	44.8	35.7	44.5	9	M14	FL206D1	AEL206D1	4,400	2,540
1 1/16	AELFL206-101D1	5 13/16	4 19/32	1/2	1 7/32	5/8	1 49/64	1.406	1.75	0.354	1/2	FL206D1	AEL206-101D1		
1 1/8	AELFL206-102D1											FL206D1	AEL206-102D1		
1 3/16	AELFL206-103D1											FL206D1	AEL206-103D1		
1 1/4	AELFL206-104D1											FL206D1	AEL206-104D1		
35	AELFL207D1	161	130	15	34	16	48.4	38.9	55.6	9.5	M14	FL207D1	AEL207D1	5,750	3,440
1 1/4	AELFL207-104D1	6 11/16	5 1/8	19/32	1 11/32	5/8	1 29/32	1.531	2.19	0.374	1/2	FL207D1	AEL207-104D1		
1 5/16	AELFL207-105D1											FL207D1	AEL207-105D1		
1 3/8	AELFL207-10 6D1											FL207D1	AEL207-106D1		
1 7/16	AELFL207-107D1											FL207D1	AEL207-107D1		
40	AELFL208D1	175	144	15	36	16	53.6	43.7	60.2	11	M14	FL208D1	AEL208D1	6,550	4,000
1 1/2	AELFL208-108D1	6 7/8	5 21/32	19/32	1 13/32	5/8	2 7/64	1.719	2.37	0.433	1/2	FL208D1	AEL208-108D1		
1 9/16	AELFL208-109D1											FL208D1	AEL208-109D1		
45	AELFL209D1	188	148	16	38	19	54.8	43.7	63.5	11	M16	FL209D1	AEL209D1	7,350	4,590
1 5/8	AELFL209-110D1	7 13/32	5 13/16	5/8	1 1/2	3/4	2 5/32	1.719	2.50	0.433	5/8	FL209D1	AEL209-110D1		
1 11/16	AELFL209-111D1											FL209D1	AEL209-111D1		
1 3/4	AELFL209-112D1											FL209D1	AEL209-112D1		
50	AELFL210D1	197	157	16	40	19	54.8	43.7	69.90	11	M16	FL210D1	AEL210D1	7,900	5,220
1 13/16	AELFL210-113D1	7 3/4	6 3/16	5/8	1 9/16	3/4	2 5/32	1.719	2.75	0.433	5/8	FL210D1	AEL210-113D1		
1 7/8	AELFL210-114D1											FL210D1	AEL210-114D1		
1 15/16	AELFL210-115D1											FL210D1	AEL210-115D1		

Units: Millimeters
INCHES

SERIES JELFL2

ECCENTRIC LOCKING COLLAR TYPE

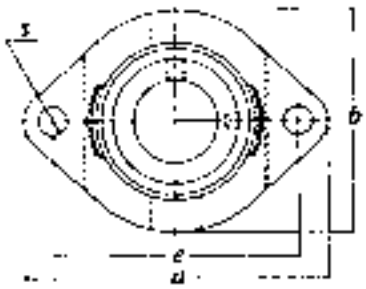

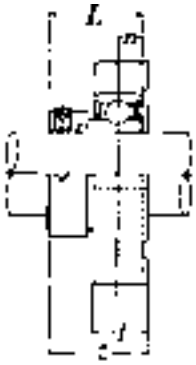

FLANGED UNITS - CAST HOUSING (TWO BOLT)

Shaft Diameter	Complete Flanged Unit Number D_1	Nominal Dimensions *a*	*e*	*s*	*b*	*l*	*z*	*L*	*n*	Bolt Size	Housing Number	Bearing Number	Basic Load Ratings (lbs) *Dynamic C*	*Static C_o*
20	JELFL204D1W3	113	90	12	60	25.5	38.5	31.0	7.5	M10	FL204D1	JEL204D1W3	2,890	1,500
3/4	JELFL204-012D1W3	4 7/16	3 35/64	15/32	2 3/8	1	1 33/64	1.220	.295	5/16	FL204D1	JEL204-012D1W3		
25	JELFL205D1W3	130	99	16	68	27	39.5	31.0	7.5	M14	FL205D1	JEL205D1W3	3,150	1,770
13/16	JELFL205-013D1W3											JEL205-013D1W3		
7/8	JELFL205-014D1W3	5 1/8	3 57/64	5/8	2 11/16	1 1/16	1 9/16	1.220	.295	1/2	FL205D1	JEL205-014D1W3		
15/16	JELFL205-015D1W3											JEL205-015D1W3		
1	JELFL205-100D1W3											JEL205-100D1W3		
30	JELFL206D1W3	148	117	16	80	31	44.7	35.7	9	M14	FL206D1	JEL206D1W3	4,400	2,540
1 1/16	JELFL206-101D1W3											JEL206-101D1W3		
1 1/8	JELFL206-102D1W3	5 13/16	4 39/64	5/8	3 5/12	1 7/32	1 49/64	1.406	.354	1/2	FL206D1	JEL206-102D1W3		
1 3/16	JELFL206-103D1W3											JEL206-103D1W3		
1 1/4	JELFL206-104D1W3											JEL206-104D1W3		
35	JELFL207D1W3	161	130	16	90	34	48.4	38.9	9.5	M14	FL207D1	JEL207D1W3	5,750	3,440
1 1/4	JELFL207-104D1W3											JEL207-104D1W3		
1 5/16	JELFL207-105D1W3	6 11/32	5 1/8	5/8	3 17/32	1 11/32	1 29/32	1.531	.374	1/2	FL207D1	JEL207-105D1W3		
1 3/8	JELFL207-106D1W3											JEL207-106D1W3		
1 7/16	JELFL207-107D1W3											JEL207-107D1W3		
40	JELFL208D1W3	175	144	16	100	36	53.7	43.7	11	M14	FL208D1	JEL208D1W3	6,550	4,000
1 1/2	JELFL208-108D1W3											JEL208-108D1W3		
1 9/16	JELFL208-109D1W3	6 7/8	5 43/64	5/8	3 15/16	1 11/32	2 7/16	1.720	.433	1/2	FL208D1	JEL208-109D1W3		
45	JELFL209D1W3	188	148	19	108	38	54.7	43.7	11	M16	FL209D1	JEL209D1W3	7,350	4,590
1 5/8	JELFL209-110D1W3											JEL209-110D1W3		
1 11/16	JELFL209-111D1W3	7 13/32	5 53/64	3/4	4 1/4	1 1/2	2 5/32	1.720	.433	5/8	FL209D1	JEL209-111D1W3		
1 3/4	JELFL209-112D1W3											JEL209-112D1W3		
50	JELFL210D1W3	197	157	19	115	40	54.7	43.7	11	M16	FL210D1	JEL210D1W3	7,900	5,220
1 13/16	JELFL210-113D1W3											JEL210-113D1W3		
1 7/8	JELFL210-114D1W3											JEL210-114D1W3		
1 15/16	JELFL210-115D1W3	7 3/4	6 3/16	3/4	4 17/32	19/16	2 5/32	1.720	.433	5/8	FL210D1	JEL210-115D1W3		
2	JELFL210-220D1W3											JEL210-220D1W3		
55	JELFL211D1W3	224	184	19	130	43	61.4	48.4	12	M16	FL211D1	JEL211D1W3	9,750	6,570
2	JELFL211-200D1W3											JEL211-200D1W3		
2 1/16	JELFL211-201D1W3											JEL211-201D1W3		
2 1/8	JELFL211-202D1W3	8 13/16	7 61/64	3/4	5 1/8	1 11/16	2 27/64	1.906	.472	5/8	FL211D1	JEL211-202D1W3		
2 3/16	JELFL211-203D1W3											JEL211-203D1W3		
60	JELFL212D1W3	250	202	23	140	48	68.6	53.1	13.5	M20	FL212D1	JEL212D1W3	11,800	8,100
2 1/4	JELFL212-204D1W3											JEL212-204D1W3		
2 5/16	JELFL212-205D1W3	9 27/32	7 61/64	29/32	5 1/2	1 7/8	2 45/64	2.091	.531	3/4	FL212D1	JEL212-205D1W3		
2 3/8	JELFL212-206D1W3											JEL212-206D1W3		

SERIES ASFD2

SET SCREW TYPE

Units: Millimeters
INCHES

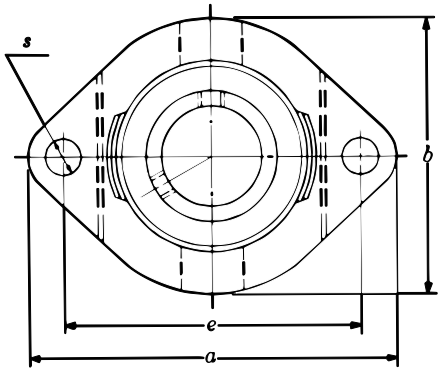

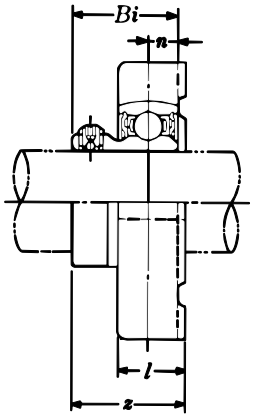

FLANGED UNITS - CAST HOUSING (TWO BOLT)

Shaft Dia.	Complete Flanged Unit Number	Nominal Dimensions								Bolt Size	Housing Number	Bearing Number	Basic Load Ratings (lbs)	
		a	*e*	*l*	*s*	*b*	*z*	*Bi*	*n*				*Dynamic C*	*Static C_o*
12 ½	ASFD201 **ASFD201-008**	81 **3 3/16**	63 **2 15/32**	15 **19/32**	7 **9/32**	59 **2 5/16**	24.5 **31/32**	22 **.866**	6 **.236**	M6 ¼	FD201 **FD201**	AS201 **AS201-008**	**2,160**	**1,040**
15 9/16 ⅝	ASFD202 **ASFD202-009** **ASFD202-010**	81 **3 3/16**	63 **2 15/32**	15 **19/32**	7 **9/32**	59 **2 5/16**	24.5 **31/32**	22 **.866**	6 **.236**	M6 ¼	FD201 **FD201** **FD201**	AS202 **AS202-009** **AS202-010**	**2,160**	**1,040**
17 11/16	ASFD203 ***ASFD203-011**	81 **3 3/16**	63 **2 15/32**	15 **19/32**	7 **9/32**	59 **2 5/16**	24.5 **31/32**	22 **.866**	6 **.236**	M6 ¼	FD201 **FD201**	AS203 **AS203-011**	**2,160**	**1,040**
20 ¾	ASFD204 **ASFD204-012**	90 **3 17/32**	71 **2 25/32**	17 **21/32**	10 **25/64**	67 **2 ⅝**	27.5 **1 5/64**	25 **.984**	7 **.276**	M8 5/16	FD204 **FD204**	AS204 **AS204-012**	**2,890**	**1,500**
25 13/16 ⅞ 15/16 1	ASFD205 **ASFD205-013** **ASFD205-014** **ASFD205-015** **ASFD205-100**	95 **3 ¾**	76 **3**	17 **21/32**	10 **25/64**	71 **2 25/32**	29 **1 9/64**	27 **1.063**	7.5 **.295**	M8 5/16	FD205 **FD205** **FD205** **FD205** **FD205**	AS205 **AS205-013** **AS205-014** **AS205-015** **AS205-100**	**3,150**	**1,770**
30 1 1/16 1 ⅛ 1 3/16 1 ¼	ASFD206 **ASFD206-101** **ASFD206-102** **ASFD206-103** ***ASFD206-104**	113 **4 7/16**	90 **3 17/32**	21 **13/16**	12 **15/32**	84 **3 5/16**	33 **1 19/64**	29 **1.142**	8 **.315**	M10 ⅜	FD206 **FD206** **FD206** **FD206** **FD206**	AS206 **AS206-101** **AS206-102** **AS206-103** **AS206-104**	**4,400**	**2,540**
35 1 ¼ 1 5/16 1 ⅜ 1 7/16	ASFD207 **ASFD207-104** **ASFD207-105** **ASFD207-106** ***ASFD207-107**	125 **4 29/32**	100 **3 15/16**	22 **⅞**	12 **15/32**	94 **3 11/16**	38 **1 ½**	34 **1.339**	8.5 **.335**	M10 ⅜	FD207 **FD207** **FD207** **FD207** **FD207**	AS207 **AS207-104** **AS207-105** **AS207-106** **AS207-107**	**5,750**	**3,440**

Remarks: 1) If relubricatable type is needed, please order with suffix “A-”, “D1”, ex. A-ASFD201D1

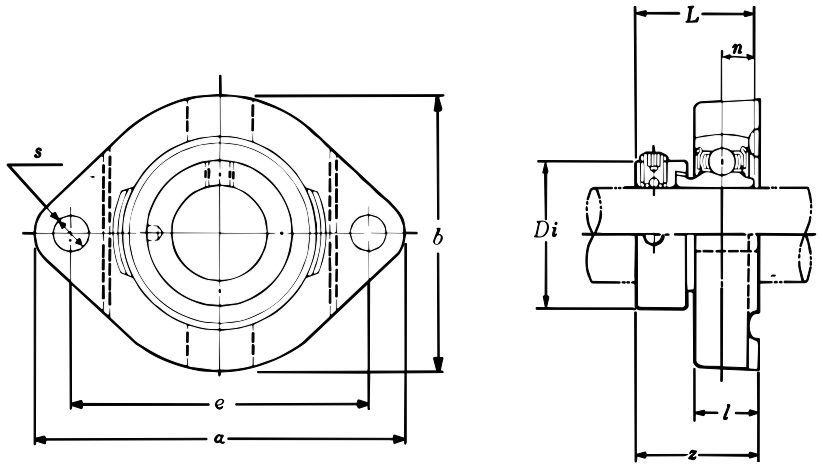

Units: Millimeters
INCHES

NTN

SERIES AELFD2

ECCENTRIC LOCKING COLLAR TYPE

FLANGED UNITS - CAST HOUSING (TWO BOLT)

Shaft Dia.	Complete Flanged Unit Number	Nominal Dimensions								Bolt Size	Housing Number	Bearing Number	Basic Load Ratings (lbs)	
		a	*e*	*s*	*l*	*b*	*Di*	*L*	*n*				*Dynamic C*	*Static C_o*
12 ½	AELFD201 **AELFD201-008**	81 **3 3/16**	63 **2 15/32**	7 **9/32**	15 **19/32**	59 **2 5/16**	29 **1.14**	28.6 **1.126**	6.5 **.256**	M6 **¼**	FD201 **FD201**	AEL201 **AEL201-008**	**2,160**	**1,040**
15 9/16 ⅝	AELFD202 **AELFD202-009** **AELFD202-010**	81 **3 3/16**	63 **2 15/32**	7 **9/32**	15 **19/32**	59 **2 5/16**	29 **1.14**	28.6 **1.126**	6.5 **.256**	M6 **¼**	FD201 **FD201** **FD201**	AEL202 **AEL202-009** **AEL202-010**	**2,160**	**1,040**
17 11/16	AELFD203 **AELFD203-011**	81 **3 3/16**	63 **2 15/32**	7 **9/32**	15 **19/32**	59 **2 5/16**	29 **1.14**	28.6 **1.126**	6.5 **.256**	M6 **¼**	FD201 **FD201**	AEL203 **AEL203-011**	**2,160**	**1,040**
20 ¾	AELFD204 **AELFD204-012**	90 **3 17/32**	71 **2 25/32**	10 **25/64**	17 **21/32**	67 **2 ⅝**	33.3 **1.31**	31 **1.220**	7.5 **.295**	M8 **5/16**	FD204 **FD204**	AEL204 **AEL204-012**	**2,890**	**1,500**
25 13/16 ⅞ 15/16 1	AELFD205 **AELFD205-013** **AELFD205-014** **AELFD205-015** **AELFD205-100**	95 **3 ¾**	76 **3**	10 **25/64**	17 **21/32**	71 **2 25/32**	38.1 **1.50**	31 **1.220**	7.5 **.295**	M8 **5/16**	FD205 **FD205** **FD205** **FD205** **FD205**	AEL205 **AEL205-013** **AEL205-014** **AEL205-015** **AEL205-100**	**3,150**	**1,770**
30 1 1/16 1 ⅛ 1 3/16 1 ¼	AELFD206 **AELFD206-101** **AELFD206-102** **AELFD206-103** **AELFD206-104**	113 **4 7/16**	90 **3 17/32**	12 **15/32**	21 **13/16**	84 **3 5/16**	44.5 **1.75**	35.7 **1.406**	9 **.354**	M10 **⅜**	FD206 **FD206** **FD206** **FD206** **FD206**	AEL206 **AEL206-101** **AEL206-102** **AEL206-103** **AEL206-104**	**4,400**	**2,540**
35 1 ¼ 1 5/16 1 ⅜ 1 7/16	AELFD207 **AELFD207-104** **AELFD207-105** **AELFD207-106** **AELFD207-107**	125 **4 29/32**	100 **3 15/16**	12 **15/32**	22 **⅞**	94 **3 11/16**	55.6 **2.19**	38.9 **1.531**	9.5 **.374**	M10 **⅜**	FD207 **FD207** **FD207** **FD207** **FD207**	AEL207 **AEL207-104** **AEL207-105** **AEL207-106** **AEL207-107**	**5,750**	**3,440**

Remarks: 1) If relubricatable type is needed, please order with suffix “A-”, “D1”, ex. A-AELFD201D1

SERIES JELFD2

ECCENTRIC LOCKING COLLAR TYPE

Units: Millimeters
INCHES

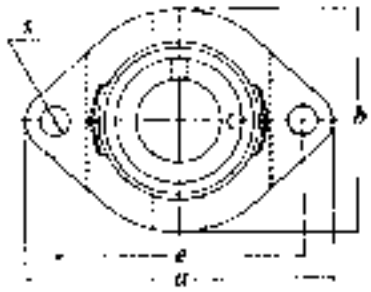

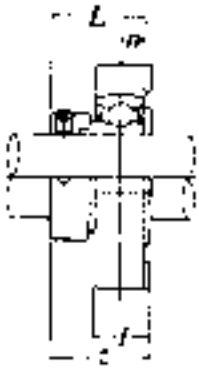

FLANGED UNITS - CAST HOUSING (TWO BOLT)

Shaft Dia.	Complete Flanged Unit Number	Nominal Dimensions									Bolt Size	Housing Number	Bearing Number	Basic Load Ratings (lbs)	
		a	*e*	*s*	*b*	*l*	*z*	*Di*	*L*	*n*				*Dynamic C*	*Static C_o*
12 1/2	JELFD201 **JELFD201-008**	81 **3 3/16**	63 **2 15/32**	7 **9/32**	59 **2 5/16**	15 **19/32**	30.6 **1 13/64**	29 **1.14**	28.6 **1.126**	6.5 **.256**	M6 **1/4**	FD201 **FD201**	JEL201 **JEL201-008**	**2,160**	**1,030**
15 9/16 5/8	JELFD202 **JELFD202-009** **JELFD202-010**	81 **3 3/16**	63 **2 15/32**	7 **9/32**	59 **2 5/16**	15 **19/32**	30.6 **1 13/64**	29 **1.14**	28.6 **1.126**	6.5 **.256**	M6 **1/4**	FD201 **FD201** **FD201**	JEL202 **JEL202-009** **JEL202-010**	**2,160**	**1,030**
17 11/16	JELFD203 **JELFD203-011**	81 **3 3/16**	63 **2 15/32**	7 **9/32**	59 **2 5/16**	15 **19/32**	30.6 **1 13/64**	29 **1.14**	28.6 **1.126**	6.5 **.256**	M6 **1/4**	FD201 **FD201**	JEL203 **JEL203-011**	**2,160**	**1,030**
20 3/4	JELFD204 **JELFD204-012**	90 **3 17/32**	71 **2 25/32**	10 **25/64**	67 **2 5/8**	17 **21/32**	33 **1 19/64**	33.3 **1.31**	31 **1.220**	7.5 **.295**	M8 **5/16**	FD204 **FD204**	JEL204 **JEL204-012**	**2,890**	**1,500**
25 13/16 7/8 15/16 1	JELFD205 **JELFD205-013** **JELFD205-014** **JELFD205-015** **JELFD205-100**	95 **3 3/4**	76 **3**	10 **25/64**	71 **2 25/32**	17 **21/32**	33 **1 19/64**	38.1 **1.50**	31 **1.220**	7.5 **.295**	M8 **5/16**	FD205 **FD205** **FD205** **FD205** **FD205**	JEL205 **JEL205-013** **JEL205-014** **JEL205-015** **JEL205-100**	**3,150**	**1,770**
30 1 1/16 1 1/8 1 3/16 1 1/4	JELFD206 **JELFD206-101** **JELFD206-102** **JELFD206-103** **JELFD206-104**	113 **4 7/16**	90 **3 17/32**	12 **15/32**	84 **3 5/16**	21 **13/16**	38.7 **1 17/32**	44.5 **1.75**	35.7 **1.406**	9 **.354**	M10 **3/8**	FD206 **FD206** **FD206** **FD206** **FD206**	JEL206 **JEL206-101** **JEL206-102** **JEL206-103** **JEL206-104**	**4,400**	**2,540**
35 1 1/4 1 5/16 1 3/8 1 7/16	JELFD207 **JELFD207-104** **JELFD207-105** **JELFD207-106** **JELFD207-107**	125 **4 29/32**	100 **3 15/16**	12 **15/32**	94 **3 11/16**	22 **7/8**	41.9 **1 21/32**	55.6 **2.19**	38.9 **1.531**	9.5 **.374**	M10 **3/8**	FD207 **FD207** **FD207** **FD207** **FD207**	JEL207 **JEL207-104** **JEL207-105** **JEL207-106** **JEL207-107**	**5,750**	**3,450**

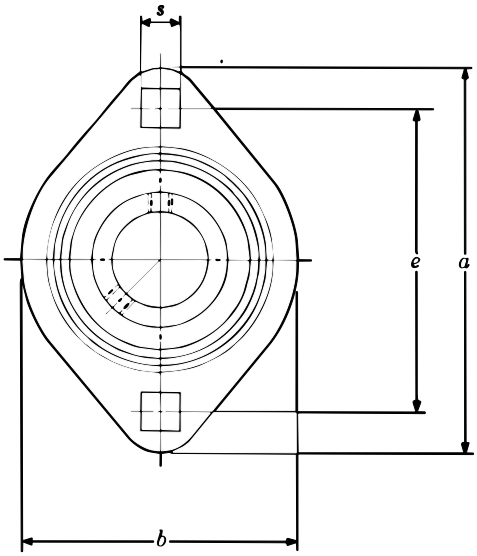

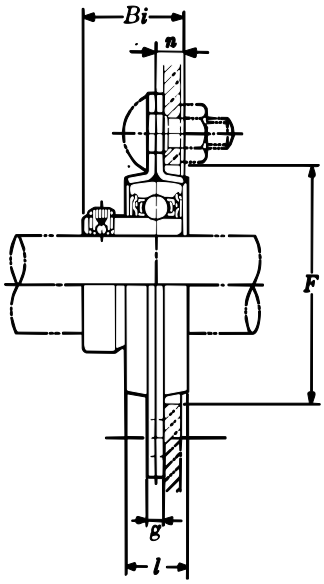

Units: Millimeters
INCHES

NTN

SERIES ASPFL2

SET SCREW TYPE

FLANGED UNITS - PRESSED STEEL HOUSING (TWO BOLT)

Shaft Dia.	Complete Flanged Unit Number	Nominal Dimensions *a*	*e*	*g*	*s*	*l*	*Bi*	*n*	(min) *F*	Bolt Size	Housing Number	Bearing Number	Basic Load Ratings (lbs) *Dynamic C*	*Static C_o*	Max. Radial Load (lbs)
12 ½	ASPFL201 ASPFL201-008	81 3 3/16	63 2 15/32	4 .157	7 9/32	14 9/16	22 .866	6 .236	49 1 15/16	M6 ¼	PFL203 PFL203	AS201 AS201-008	2,160	1,040	600
15 9/16 ⅝	ASPFL202 ASPFL202-009 ASPFL202-010	81 3 3/16	63 2 15/32	4 .157	7 9/32	14 9/16	22 .866	6 .236	49 1 15/16	M6 ¼	PFL203 PFL203 PFL203	AS202 AS202-009 AS202-010	2,160	1,040	600
17 11/16	ASPFL203 ASPFL203-011	81 3 3/16	63 2 15/32	4 .157	7 9/32	14 9/16	22 .866	6 .236	49 1 15/16	M6 ¼	PFL203 PFL203	AS203 AS206-011	2,160	1,040	600
20 ¾	ASPFL204 ASPFL204-012	90 3 17/32	71 2 25/32	4 .157	9 23/64	16 ⅝	25 .984	7 .276	56 2 7/32	M8 5/16	PFL204 PFL204	AS204 AS204-012	2,890	1,500	660
25 13/16 ⅞ 15/16 1	ASPFL205 ASPFL205-013 ASPFL205-014 ASPFL205-015 ASPFL205-100	95 3 ¾	76 3	4 .157	9 23/64	18 23/32	27 1.063	7.5 .295	60 2 ⅜	M8 5/16	PFL205 PFL205 PFL205 PFL205 PFL205	AS205 AS205-013 AS205-014 AS205-015 AS205-100	3,150	1,770	880
30 1 1/16 1 ⅛ 1 3/16	ASPFL206 ASPFL206-101 ASPFL206-102 ASPFL206-103 ASPFL206-104	113 4 7/16	90 3 17/32	5.2 .205	11 7/16	18 23/32	29 1.142	8 .315	71 2 25/32	M10 ⅜	PFL206 PFL206 PFL206 PFL206 PFL206	AS206 AS206-101 AS206-102 AS206-103 AS206-104	4,400	2,540	1,100
35 1 ¼ 1 5/16 1 ⅜ 1 7/16	ASPFL207 ASPFL207-104 ASPFL207-105 ASPFL207-106 ASPFL207-107	122 4 13/16	100 3 15/16	5.2 .205	11 7/16	20 25/32	34 1.339	8.5 .335	81 3 3/16	M10 ⅜	PFL207 PFL207 PFL207 PFL207 PFL207	AS207 AS207-104 AS207-105 AS207-106 AS207-107	5,750	3,440	1,300

Axial load should be less than 1/3 of radial load.

SERIES AELPFL2

ECCENTRIC LOCKING COLLAR TYPE

Units: Millimeters
INCHES

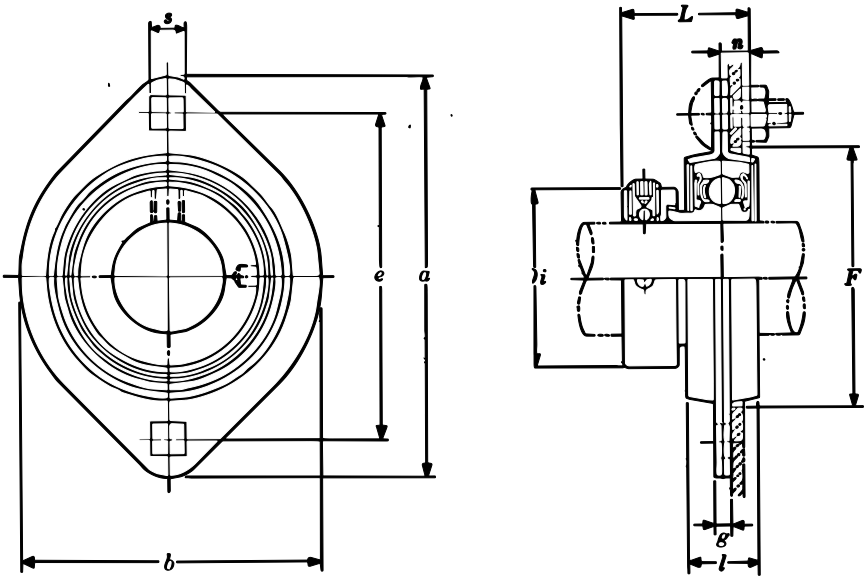

FLANGED UNITS - PRESSED STEEL HOUSING (TWO BOLT)

Shaft Dia.	Complete Flanged Unit Number	Nominal Dimensions a	e	g	s	l	b	Di	L	n	(min) F	Bolt Size	Housing Number	Bearing Number	Basic Load Ratings (lbs) Dynamic C	Static C_o	Max. Radial Load (lbs)
12	AELPFL201	81	63	4	7	14	59	29	28.6	6.5	49	M6	PFL203	AEL201	2,160	1,040	600
½	AELPFL201-008W3	3 3/16	2 15/32	.157	9/32	9/16	2 5/16	1.14	1.126	.256	1 15/16	¼	PFL203	AEL201-088W3			
15	AELPFL202	81	63	4	7	14	59	29	28.6	6.5	49	M6	PFL203	AEL202	2,160	1,040	600
9/16	AELPFL202-009W3	3 3/16	2 15/32	.157	9/32	9/16	2 5/16	1.14	1.126	.256	1 15/16	¼	PFL203	AEL202-009W3			
5/8	AELPFL202-010W3												PFL203	AEL202-010W3			
17	AELPFL203	81	63	4	7	14	59	29	28.6	6.5	49	M6	PFL203	AEL203	2,160	1,040	600
11/16	AELPFL203-011W3	3 3/16	2 15/32	.157	9/32	9/16	2 5/16	1.14	1.126	.256	1 15/16	¼	PFL203	AEL203-011W3			
20	AELPFL204	90	71	4	9	16	67	33.3	31	7.5	56	M8	PFL204	AEL204	2,890	1,500	660
¾	AELPFL204-012W3	3 17/32	2 25/32	.157	23/64	5/8	2 5/8	1.31	1.220	.295	2 7/32	5/16	PFL204	AEL204-012W3			
25	AELPFL205	95	76	4	9	18	71	38.1	31	7.5	60	M8	PFL205	AEL205	3,150	1,770	880
13/16	AELPFL205-013W3	3 ¾	3	.157	23/64	23/32	2 25/32	1.50	1.220	.295	2 3/8	5/16	PFL205	AEL205-013W3			
7/8	AELPFL205-014W3												PFL205	AEL205-014W3			
15/16	AELPFL205-015W3												PFL205	AEL205-015W3			
1	AELPFL205-100W3												PFL205	AEL205-100W3			
30	AELPFL206	113	90	5.2	11	18	84	44.5	35.7	9	71	M10	PFL206	AEL206	4,400	2,540	1,100
1 1/16	AELPFL206-101W3	4 7/16	3 17/32	.205	7/16	23/32	3 5/16	1.75	1.406	.354	2 25/32	3/8	PFL206	AEL206-101W3			
1 1/8	AELPFL206-102W3												PFL206	AEL206-102W3			
1 3/16	AELPFL206-103W3												PFL206	AEL206-103W3			
1 ¼	AELPFL206-104W3												PFL206	AEL206-104W3			
35	AELPFL207	122	100	5.2	11	20	94	55.6	38.9	9.5	81	M10	PFL207	AEL207	5,750	3,440	1,300
1 ¼	AELPFL207-104W3	4 13/16	3 15/16	.205	7/16	25/32	3 11/16	2.19	1.531	.374	3 3/16	3/8	PFL207	AEL207-104W3			
1 5/16	AELPFL207-105W3												PFL207	AEL207-105W3			
1 3/8	AELPFL207-106W3												PFL207	AEL207-106W3			
1 7/16	AELPFL207-107W3												PFL207	AEL207-107W3			

Axial load should be less than 1/3 of radial load.

Units: Millimeters
INCHES

SERIES JELPFL2

ECCENTRIC LOCKING COLLAR TYPE

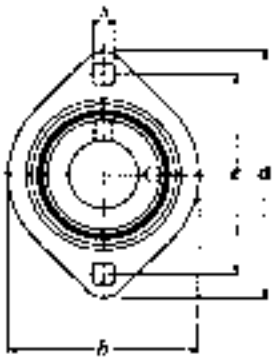

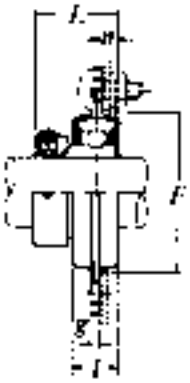

FLANGED UNITS - PRESSED STEEL HOUSING (TWO BOLT)

Shaft Dia.	Complete Flanged Unit Number	Nominal Dimensions										Bolt Size	Housing Number	Bearing Number	Basic Load Ratings (lbs)		Max. Radial Load (lbs)
		a	*e*	*g*	*s*	*l*	*b*	*Di*	*L*	*n*	*(min) F*				*Dynamic C*	*Static C_o*	
12 1/2	JELPFL201 **JELPFL201-008**	81 **3 3/16**	63 **2 15/32**	4 **.157**	7 **9/32**	14 **9/16**	59 **2 5/16**	29 **1.14**	28.6 **1.126**	6.5 **.256**	49 **1 15/16**	M6 **1/4**	PFL203 **PFL203**	JEL201 **JEL201-088**	**2,160**	**1,030**	**600**
15 9/16 5/8	JELPFL202 **JELPFL202-009** **JELPFL202-010**	81 **3 3/16**	63 **2 15/32**	4 **.157**	7 **9/32**	14 **9/16**	59 **2 5/16**	29 **1.14**	28.6 **1.126**	6.5 **.256**	49 **1 15/16**	M6 **1/4**	PFL203 **PFL203** **PFL203**	JEL202 **JEL202-009** **JEL202-010**	**2,160**	**1,030**	**600**
17 11/16	JELPFL203 **JELPFL203-011**	81 **3 3/16**	63 **2 15/32**	4 **.157**	7 **9/32**	14 **9/16**	59 **2 5/16**	29 **1.14**	28.6 **1.126**	6.5 **.256**	49 **1 15/16**	M6 **1/4**	PFL203 **PFL203**	JEL203 **JEL203-011**	**2,160**	**1,030**	**600**
20 3/4	JELPFL204 **JELPFL204-012**	90 **3 17/32**	71 **2 25/32**	4 **.157**	9 **23/64**	16 **5/8**	67 **2 5/8**	33.3 **1.31**	31 **1.220**	7.5 **.295**	56 **2 7/32**	M8 **5/16**	PFL204 **PFL204**	JEL204 **JEL204-012**	**2,890**	**1,500**	**660**
25 13/16 7/8 15/16 1	JELPFL205 **JELPFL205-013** **JELPFL205-014** **JELPFL205-015** **JELPFL205-100**	95 **3 3/4**	76 **3**	4 **.157**	9 **23/64**	18 **23/32**	71 **2 25/32**	38.1 **1.50**	31 **1.220**	7.5 **.295**	60 **2 3/8**	M8 **5/16**	PFL205 **PFL205** **PFL205** **PFL205** **PFL205**	JEL205 **JEL205-013** **JEL205-014** **JEL205-015** **JEL205-100**	**3,150**	**1,770**	**880**
30 1 1/16 1 1/8 1 3/16 1 1/4	JELPFL206 **JELPFL206-101** **JELPFL206-102** **JELPFL206-103** **JELPFL206-104**	113 **4 7/16**	90 **3 17/32**	5.2 **.205**	11 **7/16**	18 **23/32**	84 **3 5/16**	44.5 **1.75**	35.7 **1.406**	9 **.354**	71 **2 25/32**	M10 **3/8**	PFL206 **PFL206** **PFL206** **PFL206** **PFL206**	JEL206 **JEL206-101** **JEL206-102** **JEL206-103** **JEL206-104**	**4,400**	**2,540**	**1,100**
35 1 1/4 1 5/16 1 3/8 1 7/16	JELPFL207 **JELPFL207-104** **JELPFL207-105** **JELPFL207-106** **JELPFL207-107**	122 **4 13/16**	100 **3 15/16**	5.2 **.205**	11 **7/16**	20 **25/32**	94 **3 11/16**	55.6 **2.19**	38.9 **1.531**	9.5 **.374**	81 **3 3/16**	M10 **3/8**	PFL207 **PFL207** **PFL207** **PFL207** **PFL207**	JEL207 **JEL207-104** **JEL207-105** **JEL207-106** **JEL207-107**	**5,750**	**3,450**	**1,300**

Axial load should be less than 1/3 of radial load.

SERIES ASPF2

SET SCREW TYPE

Units: Millimeters
INCHES

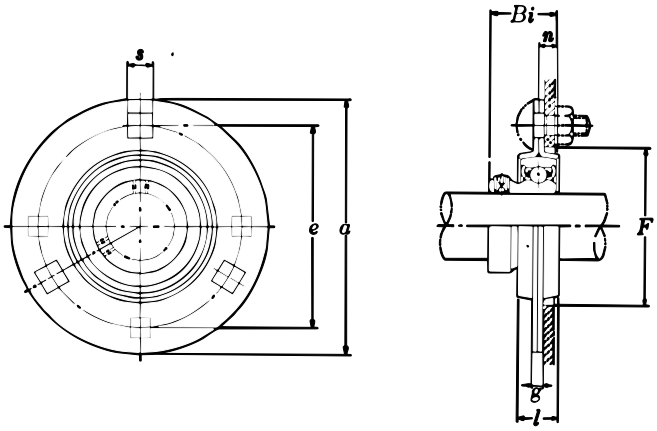

FLANGED UNITS - PRESSED STEEL HOUSING (THREE BOLT)

Shaft Dia.	Complete Flanged Unit Number	Nominal Dimensions a	e	g	s	l	Bi	n	(min) F	Bolt Size	Housing Number	Bearing Number	Basic Load Ratings (lbs) Dynamic C	Static C_o	Max. Radial Load (lbs)
12 ½	ASPF201 **ASPF201-008**	81 **3 3/16**	63 **2 15/32**	4 **.157**	7 **9/32**	14 **9/16**	22 **.866**	6 **.236**	49 **1 15/16**	M6 **¼**	PF203 **PF203**	AS201 **AS201-008**	**2,160**	**1,040**	**600**
15 9/16 ⅝	ASPF202 **ASPF202-009** **ASPF202-010**	81 **3 3/16**	63 **2 15/32**	4 **.157**	7 **9/32**	14 **9/16**	22 **.866**	6 **.236**	49 **1 15/16**	M6 **¼**	PF203 **PF203** **PF203**	AS202 **AS202-009** **AS202-010**	**2,160**	**1,040**	**600**
17 11/16	ASPF203 **ASPF203-011**	81 **3 3/16**	63 **2 15/32**	4 **.157**	7 **9/32**	14 **9/16**	22 **.866**	6 **.236**	49 **1 15/16**	M6 **¼**	PF203 **PF203**	AS203 **AS203-011**	**2,160**	**1,040**	**600**
20 ¾	ASPF204 **ASPF204-012**	90 **3 17/32**	71 **2 25/32**	4 **.157**	9 **23/64**	16 **⅝**	25 **.984**	7 **.276**	56 **2 7/32**	M8 **5/16**	PF204 **PF204**	AS204 **AS204-012**	**2,890**	**1,500**	**660**
25 13/16 ⅞ 15/16 1	ASPF205 **ASPF205-013** **ASPF205-014** **ASPF205-015** **ASPF205-100**	95 **3 ¾**	76 **3**	4 **.157**	9 **23/64**	18 **23/32**	27 **1.063**	7.5 **.295**	60 **2 ⅜**	M8 **5/16**	PF205 **PF205** **PF205** **PF205** **PF205**	AS205 **AS205-013** **AS205-014** **AS205-015** **AS205-100**	**3,150**	**1,770**	**880**
30 1 1/16 1 ⅛ 1 3/16 1 ¼	ASPF206 **ASPF206-101** **ASPF206-102** **ASPF206-103** **ASPF206-104**	113 **4 7/16**	90 **3 17/32**	5.2 **.205**	11 **7/16**	18 **23/32**	29 **1.142**	8 **.315**	71 **2 25/32**	M10 **⅜**	PF206 **PF206** **PF206** **PF206** **PF206**	AS206 **AS206-101** **AS206-102** **AS206-103** **AS206-104**	**4,400**	**2,540**	**1,100**
35 1 ¼ 1 5/16 1 ⅜ 1 7/16	ASPF207 **ASPF207-104** **ASPF207-105** **ASPF207-106** **ASPF207-107**	122 **4 13/16**	100 **3 15/16**	5.2 **.205**	11 **7/16**	20 **25/32**	34 **1.339**	8.5 **.335**	81 **3 3/16**	M10 **⅜**	PF207 **PF207** **PF207** **PF207** **PF207**	AS207 **AS207-104** **AS207-105** **AS207-106** **AS207-107**	**5,750**	**3,440**	**1,300**
40 1 ½ 1 9/16	ASPF208 **ASPF208-108** **ASPF208-109**	148 **5 13/16**	119 **4 11/16**	6.8 **.268**	14 **9/16**	21 **13/16**	38 **1.496**	9 **.354**	91 **3 9/16**	M12 **½**	PF208 **PF208** **PF208**	AS208 **AS208-108** **AS208-109**	**6,550**	**4,000**	**1,500**

Axial load should be less than 1/3 of radial load.

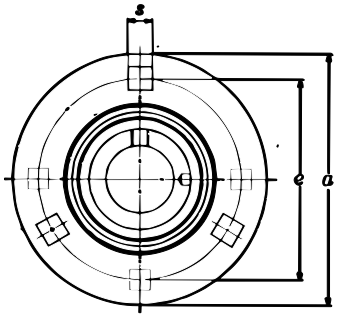

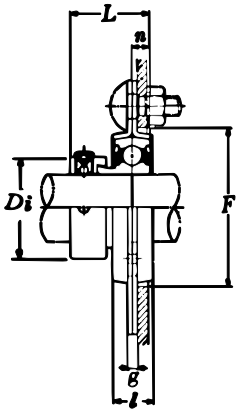

Units: Millimeters
INCHES

NTN
SERIES AELPF2
ECCENTRIC LOCKING COLLAR TYPE

FLANGED UNITS - PRESSED STEEL HOUSING (THREE BOLT)

Shaft Dia.	Complete Flanged Unit Number	Nominal Dimensions a	e	g	s	l	Bi	n	(min) F	Bolt Size	Housing Number	Bearing Number	Basic Load Ratings (lbs) Dynamic C	Static C_o	Max. Radial Load (lbs)
12 ½	AELPF201 **AELPF201-008W3**	81 **3 3/16**	63 **2 15/32**	4 **.157**	7 **9/32**	14 **9/16**	29 **1.14**	6.5 **.256**	49 **1 15/16**	M6 ¼	PF203 **PF203**	AEL201 **AEL201-008W3**	**2160**	**1040**	**600**
15 9/16 ⅝	AELPF202 **AELPF202-009W3** **AELPF202-010W3**	81 **3 3/16**	63 **2 15/32**	4 **.157**	7 **9/32**	14 **9/16**	29 **1.14**	6.5 **.256**	49 **1 15/16**	M6 ¼	PF203 **PF203** **PF203**	AEL202 **AEL202-009W3** **AEL202-010W3**	**2160**	**1040**	**600**
17 11/16	AELPF203 **AELPF203-011W3**	81 **3 3/16**	63 **2 15/32**	4 **.157**	7 **9/32**	14 **9/16**	29 **1.14**	6.5 **.256**	49 **1 15/16**	M6 ¼	PF203 **PF203**	AEL203 **AEL203-011W3**	**2160**	**1040**	**600**
20 ¾	AELPF204 **AELPF204-012W3**	90 **3 17/32**	71 **2 25/32**	4 **.157**	9 **23/64**	16 **⅝**	33.3 **1.31**	7.5 **.295**	56 **2 7/32**	M8 5/16	PF204 **PF204**	AEL204 **AEL204-012W3**	**2890**	**1500**	**660**
25 13/16 ⅞ 15/16 1	AELPF205 **AELPF205-013W3** **AELPF205-014W3** **AELPF205-015W3** **AELPF205-100W3**	95 **3 ¾**	76 **3**	4 **.157**	9 **23/64**	18 **23/32**	38.1 **1.50**	7.5 **.295**	60 **2 ⅜**	M8 5/16	PF205 **PF205** **PF205** **PF205**	AEL205 **AEL205-013W3** **AEL205-014W3** **AEL205-015W3** **AEL205-100W3**	**3150**	**1770**	**880**
30 1 1/16 1 ⅛ 1 3/16 1 ¼	AELPF206 **AELPF206-101W3** **AELPF206-102W3** **AELPF206-103W3** **AELPF206-104W3**	113 **4 7/16**	90 **3 17/32**	5.2 **.205**	11 **7/16**	18 **23/32**	44.5 **1.75**	9 **.354**	71 **2 25/32**	M10 ⅜	PF206 **PF206** **PF206** **PF206**	AEL206 **AEL206-101W3** **AEL206-102W3** **AEL206-103W3** **AEL206-104W3**	**4400**	**2540**	**1100**
35 1 ¼ 1 5/16 1 ⅜ 1 7/16	AELPF207 **AELPF207-104W3** **AELPF207-105W3** **AELPF207-106W3** **AELPF207-107W3**	122 **4 13/16**	100 **3 15/16**	5.2 **.205**	11 **7/16**	20 **25/32**	55.6 **2.19**	9.5 **.374**	81 **3 3/16**	M10 ⅜	PF207 **PF207** **PF207** **PF207** **PF207**	AEL207 **AEL207-104W3** **AEL207-105W3** **AEL207-106W3** **AEL207-107W3**	**5750**	**3440**	**1300**
40 1 ½ 1 9/16	AELPF208 **AELPF208-108W3** **AELPF208-109W3**	148 **5 13/16**	119 **4 11/16**	6.8 **.268**	14 **9/16**	21 **13/16**	60 **2.36**	11 **.433**	91 **3 9/16**	M12 ½	PF208 **PF208** **PF208**	AEL208 **AEL208-108W3** **AEL208-109W3**	**6550**	**4000**	**1500**

Axial load should be less than 1/3 of radial load.
AELPF208 has four bolt holes.

SERIES JELPF2

ECCENTRIC LOCKING COLLAR TYPE

Units: Millimeters
INCHES

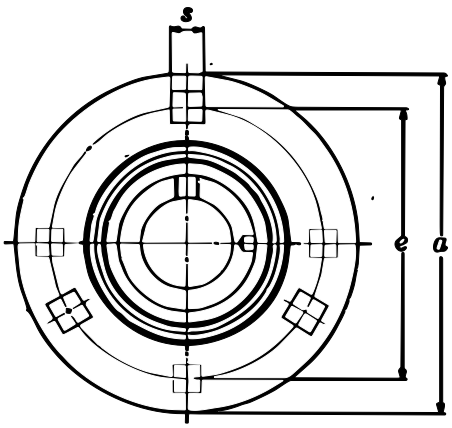

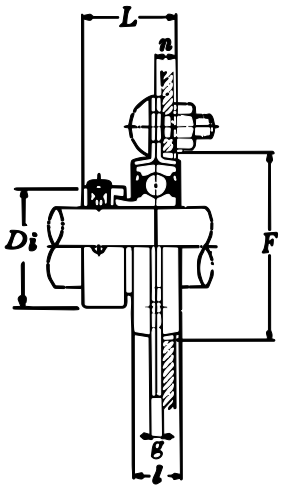

FLANGED UNITS - PRESSED STEEL HOUSING (THREE BOLT)

Shaft Dia.	Complete Flanged Unit Number	Nominal Dimensions *a*	*e*	*g*	*s*	*l*	*Di*	*L*	*n*	*(min) F*	Bolt Size	Housing Number	Bearing Number	Basic Load Ratings (lbs) *Dynamic C*	*Static C_o*	Max. Radial Load (lbs)
12 ½	JELPF201 **JELPF201-008**	81 **3 3/16**	63 **2 15/32**	4 **.157**	7 **9/32**	14 **9/16**	29 **1.14**	28.6 **1.126**	6.5 **.256**	49 **1 15/16**	M6 **¼**	PF203 **PF203**	JEL201 **JEL201-008**	**2160**	**1030**	**600**
15 9/16 ⅝	JELPF202 **JELPF202-009** **JELPF202-010**	81 **3 3/16**	63 **2 15/32**	4 **.157**	7 **9/32**	14 **9/16**	29 **1.14**	28.6 **1.126**	6.5 **.256**	49 **1 15/16**	M6 **¼**	PF203 **PF203** **PF203**	JEL202 **JEL202-009** **JEL202-010**	**2160**	**1030**	**600**
17 11/16	JELPF203 **JELPF203-011**	81 **3 3/16**	63 **2 15/32**	4 **.157**	7 **9/32**	14 **9/16**	29 **1.14**	28.6 **1.126**	6.5 **.256**	49 **1 15/16**	M6 **¼**	PF203 **PF203**	JEL203 **JEL203-011**	**2160**	**1030**	**600**
20 ¾	JELPF204 **JELPF204-012**	90 **3 17/32**	71 **2 25/32**	4 **.157**	9 **23/64**	16 **⅝**	33.3 **1.31**	31 **1.220**	7.5 **.295**	56 **2 7/32**	M8 **5/16**	PF204 **PF204**	JEL204 **JEL204-012**	**2890**	**1500**	**660**
25 13/16 ⅞ 15/16 1	JELPF205 **JELPF205-013** **JELPF205-014** **JELPF205-015** **JELPF205-100**	95 **3 ¾**	76 **3**	4 **.157**	9 **23/64**	18 **23/32**	38.1 **1.50**	31 **1.220**	7.5 **.295**	60 **2 ⅜**	M8 **5/16**	PF205 **PF205** **PF205** **PF205** **PF205**	JEL205 **JEL205-013** **JEL205-014** **JEL205-015** **JEL205-100**	**3150**	**1770**	**880**
30 1 1/16 1 ⅛ 1 3/16 1 ¼	JELPF206 **JELPF206-101** **JELPF206-102** **JELPF206-103** **JELPF206-104**	113 **4 7/16**	90 **3 17/32**	5.2 **.205**	11 **7/16**	18 **23/32**	44.5 **1.75**	35.7 **1.406**	9 **.354**	71 **2 25/32**	M10 **⅜**	PF206 **PF206** **PF206** **PF206** **PF206**	JEL206 **JEL206-101** **JEL206-102** **JEL206-103** **JEL206-104**	**4400**	**2540**	**1100**
35 1 ¼ 1 5/16 1 ⅜ 1 7/16	JELPF207 **JELPF207-104** **JELPF207-105** **JELPF207-106** **JELPF207-107**	122 **4 13/16**	100 **3 15/16**	5.2 **.205**	11 **7/16**	20 **25/32**	55.6 **2.19**	38.9 **1.531**	9.5 **.374**	81 **3 3/16**	M10 **⅜**	PF207 **PF207** **PF207** **PF207** **PF207**	JEL207 **JEL207-104** **JEL207-105** **JEL207-106** **JEL207-107**	**5750**	**3450**	**1300**
40 1 ½ 1 9/16	JELPF208 **JELPF208-108** **JELPF208-109**	148 **5 13/16**	119 **4 11/16**	6.8 **.268**	14 **9/16**	21 **13/16**	60 **2.36**	43.7 **1.720**	11 **.433**	91 **3 9/16**	M12 **½**	PF208 **PF208** **PF208**	JEL208 **JEL208-108** **JEL208-109**	**6550**	**4000**	**1500**

Axial load should be less than 1/3 of radial load.
JELPF208 has four bolt holes.

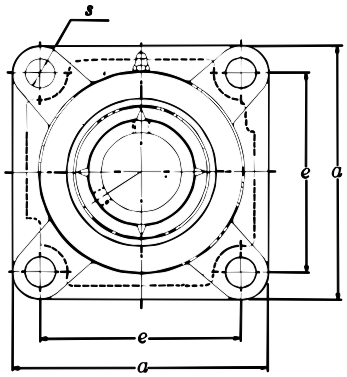

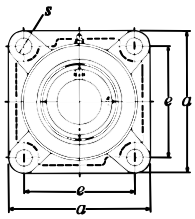

Units: Millimeters
INCHES

NTN

SERIES UCF2

SET SCREW TYPE

FLANGED UNITS - CAST HOUSING (FOUR BOLT)

Shaft Dia.	Complete Flanged Unit Number	Nominal Dimensions *a*	*e*	*g*	*l*	*s*	*z*	*Bi*	*n*	Bolt Size	Housing Number	Bearing Number	Basic Load Ratings (lbs) *Dynamic C*	*Static C_o*
12 ½	UCF201D1 **UCF201-008D1**	86 3 ⅜	64 2 33/64	11 7/16	25.5 1	12 15/32	33.3 1 5/16	31 1.220	12.7 .500	M10 ⅜	F204D1 **F204D1**	UC201D1 **UC201-008D1**	**2,890**	**1,500**
15 9/16 ⅝	UCF202D1 **UCF202-009D1** **UCF202-010D1**	86 3 ⅜	64 2 33/64	11 7/16	25.5 1	12 15/32	33.3 1 5/16	31 1.220	12.7 .500	M10 ⅜	F204D1 **F204D1** **F204D1**	UC202D1 **UC202-009D1** **UC202-010D1**	**2,890**	**1,500**
17 11/16	UCF203D1 **UCF203-011D1**	86 3 ⅜	64 2 33/64	11 7/16	25.5 1	12 15/32	33.3 1 5/16	31 1.220	12.7 .500	M10 ⅜	F204D1 **F204D1**	UC203D1 **UC203-011D1**	**2,890**	**1,500**
20 ¾	UCF204D1 **UCF204-012D1**	86 3 ⅜	64 2 33/64	11 7/16	25.5 1	12 15/32	33.3 1 5/16	31 1.220	12.7 .500	M10 ⅜	F204D1 **F204D1**	UC204D1 **UC204-012D1**	**2,890**	**1,500**
25 13/16 ⅞ 15/16 1	UCF205D1 **UCF205-013D1** **UCF205-014D1** **UCF205-015D1** **UCF205-100D1**	95 3 ¾	70 2 ¾	13 ½	27 1 1/16	12 15/32	35.7 1 13/32	34 1.339	14.3 .563	M10 ⅜	F205D1 **F205D1** **F205D1** **F205D1** **F205D1**	UC205D1 **UC205-013D1** **UC205-014D1** **UC205-015D1** **UC205-100D1**	**3,150**	**1,770**
30 1 1/16 1 ⅛ 1 3/16 1 ¼	UCF206D1 **UCF206-101D1** **UCF206-102D1** **UCF206-103D1** ***UCF206-104D1**	108 4 ¼	83 3 17/64	13 ½	31 1 7/32	12 15/32	40.2 1 37/64	38.1 1.500	15.9 .626	M10 ⅜	F206D1 **F206D1** **F206D1** **F206D1** **F206D1**	UC206D1 **UC206-101D1** **UC206-102D1** **UC206-103D1** **UC206-104D1**	**4,400**	**2,540**
35 1 ¼ 1 5/16 1 ⅜ 1 7/16	UCF207D1 **UCF207-104D1** **UCF207-105D1** **UCF207-106D1** ***UCF207-107D1**	117 4 19/32	92 3 ⅝	15 19/32	34 1 11/32	14 35/64	44.4 1 ¾	42.9 1.689	17.5 .689	M12 ½	F207D1 **F207D1** **F207D1** **F207D1** **F207D1**	UC207D1 **UC207-104D1** **UC207-105D1** **UC207-106D1** **UC207-107D1**	**5,750**	**3,440**
40 1 ½ 1 9/16	UCF208D1 **UCF208-108D1** **UCF208-109D1**	130 5 ⅛	102 4 1/64	15 19/32	36 1 13/32	16 ⅝	51.2 2 1/64	49.2 1.937	19 .748	M14 ½	F208D1 **F208D1** **F208D1**	UC208D1 **UC208-108D1** **UC208-109D1**	**6,550**	**4,000**
45 1 ⅝ 1 11/16 1 ¾	UCF209D1 **UCF209-110D1** **UCF209-111D1** **UCF209-112D1**	137 5 13/32	105 4 9/64	16 ⅝	38 1 ½	16 ⅝	52.2 2 1/16	49.2 1.937	19 .748	M14 ½	F209D1 **F209D1** **F209D1** **F209D1**	UC209D1 **UC209-110D1** **UC209-111D1** **UC209-112D1**	**7,350**	**4,590**
50 1 13/16 1 ⅞ 1 15/16 2	UCF210D1 **UCF210-113D1** **UCF210-114D1** **UCF210-115D1** **UCF210-200D1**	143 5 ⅝	111 4 ⅜	16 ⅝	40 1 9/16	16 ⅝	54.6 2 5/32	51.6 2.031	19 .748	M14 ½	F210D1 **F210D1** **F210D1** **F210D1** **F210D1**	UC210D1 **UC210-113D1** **UC210-114D1** **UC210-115D1** **UC210-200D1**	**7,900**	**5,220**
55 2 2 1/16 2 ⅛ 2 3/16	UCF211D1 **UCF211-200D1** **UCF211-201D1** **UCF211-202D1** **UCF211-203D1**	162 6 ⅜	130 5 ⅛	18 23/32	43 1 11/16	19 ¾	58.4 2 19/64	55.6 2.189	22.2 .874	M16 ⅝	F211D1 **F211D1** **F211D1** **F211D1** **F211D1**	UC211D1 **UC211-200D1** **UC211-201D1** **UC211-202D1** **UC211-203D1**	**9,750**	**6,570**

Continued on next page.

NTN

SERIES UCF2

SET SCREW TYPE

Units: Millimeters
INCHES

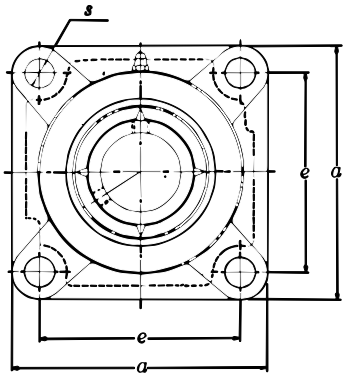

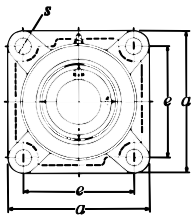

FLANGED UNITS - CAST HOUSING (FOUR BOLT)

Shaft Dia.	Complete Flanged Unit Number	Nominal Dimensions								Bolt Size	Housing Number	Bearing Number	Basic Load Ratings (lbs)	
		a	*e*	*g*	*l*	*s*	*z*	*Bi*	*n*				*Dynamic C*	*Static C_o*
60 **2 1/4** **2 3/8** **2 7/16**	UCF212D1 **UCF212-204D1** **UCF212-206D1** ***UCF212-207D1**	175 **6 7/8**	143 **5 5/8**	18 **23/32**	48 **1 7/8**	19 **3/4**	68.7 **2 45/64**	65.1 **2.563**	25.4 **1.000**	M16 **5/8**	F212D1 **F212D1** **F212D1** **F212D1**	UC212D1 **UC212-204D1** **UC212-206D1** **UC212-207D1**	**11,800**	**8,100**
65 **2 1/2**	UCF213D1 **UCF213-208D1**	187 **7 3/8**	149 **5 55/64**	22 **7/8**	50 **1 31/32**	19 **3/4**	69.7 **2 3/4**	65.1 **2.563**	25.4 **1.000**	M16 **5/8**	F213D1 **F213D1**	UC213D1 **UC213-208D1**	**12,900**	**9,000**
70 **2 11/16** **2 3/4**	UCF214D1 **UCF214-211D1** **UCF214-212D1**	193 **7 19/32**	152 **5 63/64**	22 **7/8**	54 **2 1/8**	19 **3/4**	75.4 **2 31/32**	74.6 **2.937**	30.2 **1.189**	M16 **5/8**	F214D1 **F214D1** **F214D1**	UC214D1 **UC214-211D1** **UC214-212D1**	**14,000**	**9,900**
75 **2 15/16** **3**	UCF215D1 **UCF215-215D1** **UCF215-300D1**	200 **7 7/8**	159 **6 17/64**	22 **7/8**	56 **2 7/32**	19 **3/4**	78.5 **3 3/32**	77.8 **3.063**	33.3 **1.311**	M16 **5/8**	F215D1 **F215D1** **F215D1**	UC215D1 **UC215-215D1** **UC215-300D1**	**14,900**	**11,100**
80 **3 1/8**	UCF216D1 **UCF216-302D1**	208 **8 3/16**	165 **6 1/2**	22 **7/8**	58 **2 9/32**	23 **29/32**	83.3 **3 9/32**	82.6 **3.252**	33.3 **1.311**	M20 **3/4**	F216D1 **F216D1**	UC216D1 **UC216-302D1**	**16,300**	**11,900**
85 **3 1/4**	UCF217D1 **UCF217-304D1**	220 **8 21/32**	175 **6 57/64**	24 **15/16**	63 **2 15/32**	23 **29/32**	87.6 **3 29/64**	85.7 **3.374**	34.1 **1.343**	M20 **3/4**	F217D1 **F217D1**	UC217D1 **UC217-304D1**	**18,700**	**14,400**
90 **3 1/2**	UCF218D1 **UCF218-308D1**	235 **9 1/4**	187 **7 23/64**	24 **15/16**	68 **2 11/16**	23 **29/32**	96.3 **3 51/64**	96 **3.780**	39.7 **1.563**	M20 **3/4**	F218D1 **F218D1**	UC218D1 **UC218-308D1**	**21,600**	**16,100**

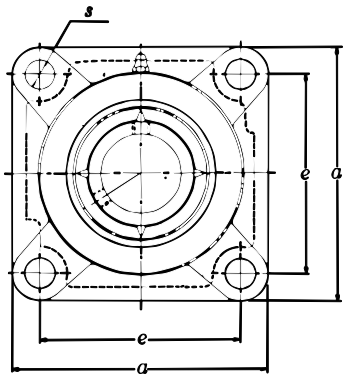

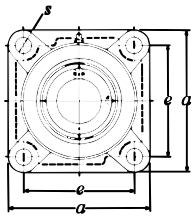

Units: Millimeters
INCHES

NTN

SERIES UCF3

SET SCREW TYPE

FLANGED UNITS - CAST HOUSING (FOUR BOLT)

Shaft Dia.	Complete Flanged Unit Number	Nominal Dimensions								Bolt Size	Housing Number	Bearing Number	Basic Load Ratings (lbs)	
		a	*e*	*g*	*l*	*s*	*z*	*Bi*	*n*				*Dynamic C*	*Static C_o*
25 7/8 15/16 1	UCF305D1 **UCF305-014D1** **UCF305-015D1** **UCF305-100D1**	110 **4 11/32**	80 **3 5/32**	13 **1/2**	29 **1 5/32**	16 **5/8**	39 **1 17/32**	38 **1.496**	15 **.591**	M14 **1/2**	F305D1 **F305D1** **F305D1** **F305D1**	UC305D1 **UC305-014D1** **UC305-015D1** **UC305-100D1**	**4,750**	**2,460**
30 1 1/8 1 3/16	UCF306D1 **UCF306-102D1** **UCF306-103D1**	125 **4 29/32**	95 **3 47/64**	15 **19/32**	32 **1 1/4**	16 **5/8**	44 **1 47/64**	43 **1.693**	17 **.669**	M14 **1/2**	F306D1 **F306D1** **F306D1**	UC306D1 **UC306-102D1** **UC306-103D1**	**6,000**	**3,400**
35 1 1/4 1 5/16 1 3/8 1 7/16	UCF307D1 **UCF307-104D1** **UCF307-105D1** **UCF307-106D1** **UCF307-107D1**	135 **5 5/16**	100 **3 15/16**	16 **5/8**	36 **1 13/32**	19 **3/4**	49 **1 59/64**	48 **1.890**	19 **.748**	M16 **5/8**	F307D1 **F307D1** **F307D1** **F307D1** **F307D1**	UC307D1 **UC307-104D1** **UC307-105D1** **UC307-106D1** **UC307-107D1**	**7,500**	**4,300**
40 1 1/2	UCF308D1 **UCF308-108D1**	150 **5 29/32**	112 **4 13/32**	17 **21/32**	40 **1 9/16**	19 **3/4**	56 **2 13/64**	52 **2.047**	19 **.748**	M16 **5/8**	F308D1 **F308D1**	UC308D1 **UC308-108D1**	**9,150**	**5,400**
45 1 5/8 1 11/16 1 3/4	UCF309D1 **UCF309-110D1** **UCF309-111D1** **UCF309-112D1**	160 **6 5/16**	125 **4 59/64**	18 **23/32**	44 **1 23/32**	19 **3/4**	60 **2 23/64**	57 **2.244**	22 **.866**	M16 **5/8**	F309D1 **F309D1** **F309D1** **F309D1**	UC309D1 **UC309-110D1** **UC309-111D1** **UC309-112D1**	**11,900**	**7,200**
50 1 7/8 1 15/16	UCF310D1 **UCF310-114D1** **UCF310-115D1**	175 **6 7/8**	132 **5 13/64**	19 **3/4**	48 **1 7/8**	23 **29/32**	67 **2 41/64**	61 **2.402**	22 **.866**	M20 **3/4**	F310D1 **F310D1** **F310D1**	UC310D1 **UC310-114D1** **UC310-115D1**	**13,900**	**8,600**
55 2 2 1/8 2 3/16	UCF311D1 **UCF311-200D1** **UCF311-202D1** **UCF311-203D1**	185 **7 9/32**	140 **5 33/64**	20 **25/32**	52 **2 1/16**	23 **29/32**	71 **2 51/64**	66 **2.598**	25 **.984**	M20 **3/4**	F311D1 **F311D1** **F311D1** **F311D1**	UC311D1 **UC311-200D1** **UC311-202D1** **UC311-203D1**	**16,100**	**10,100**
60 2 1/4 2 3/8 2 7/16	UCF312D1 **UCF312-204D1** **UCF312-206D1** **UCF312-207D1**	195 **7 11/16**	150 **5 29/32**	22 **7/8**	56 **2 7/32**	23 **29/32**	78 **3 5/64**	71 **2.795**	26 **1.024**	M20 **3/4**	F312D1 **F312D1** **F312D1** **F312D1**	UC312D1 **UC312-204D1** **UC312-206D1** **UC312-207D1**	**18,400**	**11,700**
65 2 1/2	UCF313D1 **UCF313-208D1**	208 **8 3/16**	166 **6 17/32**	22 **7/8**	58 **2 9/32**	23 **29/32**	78 **3 5/64**	75 **2.953**	30 **1.181**	M20 **3/4**	F313D1 **F313D1**	UC313D1 **UC313-208D1**	**20,800**	**13,400**
70 2 11/16 2 3/4	UCF314D1 **UCF314-211D1** **UCF314-212D1**	226 **8 29/32**	178 **7**	25 **31/32**	61 **2 13/32**	25 **63/64**	81 **3 3/16**	78 **3.071**	33 **1.299**	M22 **7/8**	F314D1 **F314D1** **F314D1**	UC314D1 **UC314-211D1** **UC314-212D1**	**23,400**	**15,300**
75 2 15/16 3	UCF315D1 **UCF315-215D1** **UCF315-300D1**	236 **9 9/32**	184 **7 1/4**	25 **31/32**	66 **2 19/32**	25 **63/64**	89 **3 1/2**	82 **3.228**	32 **1.260**	M22 **7/8**	F315D1 **F315D1** **F315D1**	UC315D1 **UC315-215D1** **UC315-300D1**	**25,500**	**17,400**
80 3 1/8 3 3/16	UCF316D1 **UCF316-302D1** **UCF316-303D1**	250 **9 27/32**	196 **7 23/32**	27 **1 1/16**	68 **2 11/16**	31 **1 7/32**	90 **3 35/64**	86 **3.386**	34 **1.339**	M27 **1**	F316D1 **F316D1** **F316D1**	UC316D1 **UC316-302D1** **UC316-303D1**	**27,600**	**19,500**

Continued on next page.

SERIES UCF3

SET SCREW TYPE

Units: Millimeters
INCHES

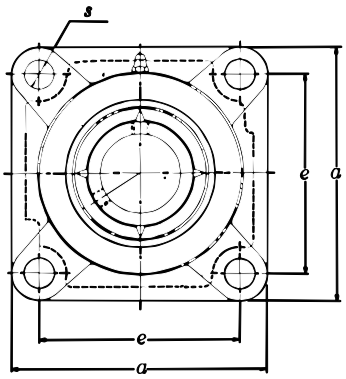

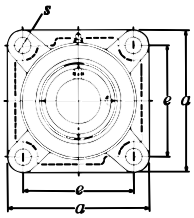

FLANGED UNITS - CAST HOUSING (FOUR BOLT)

Shaft Dia.	Complete Flanged Unit Number	Nominal Dimensions								Bolt Size	Housing Number	Bearing Number	Basic Load Ratings (lbs)	
		a	*e*	*g*	*l*	*s*	*z*	*Bi*	*n*				*Dynamic C*	*Static C_o*
85 **3 ¼**	UCF317D1 **UCF317-304D1**	260 **10 ¼**	204 **8 1/32**	27 **1 1/16**	74 **2 29/32**	31 **1 7/32**	100 **3 15/16**	96 **3.780**	40 **1.575**	M27 **1**	F317D1 **F317D1**	UC317D1 **UC317-304D1**	**29,800**	**21,800**
90 **3 7/16** **3 ½**	UCF318D1 **UCF318-307D1** **UCF318-308D1**	280 **11 1/32**	216 **8 ½**	30 **1 3/16**	76 **3**	35 **1 ⅜**	100 **3 15/16**	96 **3.780**	40 **1.575**	M30 **1 ⅛**	F318D1 **F318D1** **F318D1**	UC318D1 **UC318-307D1** **UC318-308D1**	**32,000**	**24,100**
95 **3 ¾**	UCF319D1 **UCF319-312D1**	290 **11 13/32**	228 **8 31/32**	30 **1 3/16**	94 **3 11/16**	35 **1 ⅜**	121 **4 49/64**	103 **4.055**	41 **1.614**	M30 **1 ⅛**	F319D1 **F319D1**	UC319D1 **UC319-312D1**	**34,500**	**26,600**
100 **3 15/16** **4**	UCF320D1 **UCF320-315D1** **UCF320-400D1**	310 **12 7/32**	242 **9 17/32**	32 **1 ¼**	94 **3 11/16**	38 **1 ½**	125 **4 59/64**	108 **4.252**	42 **1.654**	M33 **1 ¼**	F320D1 **F320D1** **F320D1**	UC320D1 **UC320-315D1** **UC320-400D1**	**39,000**	**31,500**
105	UCF321D1	310	242	32	94	38	127	112	44	M33	F321D1	UC321D1	**41,500**	**34,500**
110	UCF322D1	340	266	35	96	41	131	117	46	M36	F322D1	UC322D1	**46,000**	**40,500**
120	UCF324D1	370	290	40	110	41	140	126	51	M36	F324D1	UC324D1	**46,500**	**41,500**
130	UCF326D1	410	320	45	115	41	146	135	54	M36	F326D1	UC326D1	**51,500**	**48,000**
140	UCF328D1	450	350	55	125	41	161	145	59	M36	F328D1	UC328D1	**57,000**	**55,500**

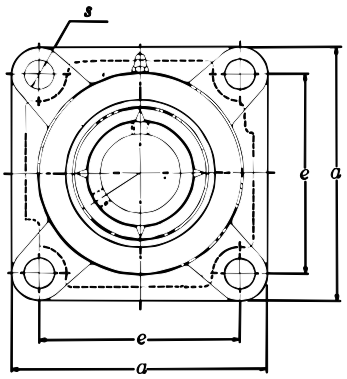

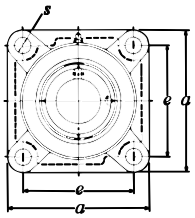

Units: Millimeters
INCHES

NTN

SERIES UCFX

SET SCREW TYPE

FLANGED UNITS - CAST HOUSING (FOUR BOLT)

Shaft Dia.	Complete Flanged Unit Number	Nominal Dimensions a	e	g	l	s	z	Bi	n	Bolt Size	Housing Number	Bearing Number	Basic Load Ratings (lbs) Dynamic C	Static C_o
25 13/16 7/8 15/16 1	UCFX05D1 UCFX05-013D1 UCFX05-014D1 UCFX05-015D1 UCFX05-100D1	108 4 1/4	83 3 17/64	13 1/2	30 1 3/16	12 15/32	40.2 1 37/64	38.1 1.500	15.9 .626	M10 3/8	FX05D1 FX05D1 FX05D1 FX05D1 FX05D1	UCX05D1 UCX05-013D1 UCX05-014D1 UCX05-015D1 UCX05-100D1	4,390	2,540
30 1 1/16 1 1/8 1 3/16 1 1/4	UCFX06D1 UCFX06-101D1 UCFX06-102D1 UCFX06-103D1 UCFX06-104D1	117 4 19/32	92 3 5/8	14 9/16	34 1 11/32	16 5/8	44.4 1 3/4	42.9 1.689	17.5 .689	M14 1/2	FX06D1 FX06D1 FX06D1 FX06D1 FX06D1	UCX06D1 UCX06-101D1 UCX06-102D1 UCX06-103D1 UCX06-104D1	5,780	3,440
35 1 5/16 1 3/8 1 7/16	UCFX07D1 UCFX07-105D1 UCFX07-106D1 UCFX07-107D1	130 5 1/8	102 4 1/64	14 9/16	38 1 1/2	16 5/8	51.2 2 1/64	49.2 1.937	19 .748	M14 1/2	FX07D1 FX07D1 FX07D1 FX07D1	UCX07D1 UCX07-105D1 UCX07-106D1 UCX07-107D1	6,550	4,000
40 1 1/2 1 9/16	UCFX08D1 UCFX08-108D1 UCFX08-109D1	137 5 13/32	105 4 9/64	14 9/16	40 1 9/16	19 3/4	52.2 2 1/16	49.2 1.937	19 .748	M16 5/8	FX08D1 FX08D1 FX08D1	UCX08D1 UCX08-108D1 UCX08-109D1	7,310	4,590
45 1 5/8 1 11/16 1 3/4 1 13/16	UCFX09D1 UCFX09-110D1 UCFX09-111D1 UCFX09-112D1 UCFX09-113D1	143 5 5/8	111 4 3/8	14 9/16	40 1 9/16	19 3/4	55.6 2 3/16	51.6 2.031	19 .748	M16 5/8	FX09D1 FX09D1 FX09D1 FX09D1 FX09D1	UCX09D1 UCX09-110D1 UCX09-111D1 UCX09-112D1 UCX09-113D1	7,870	5,220
50 1 7/8 1 15/16 2	UCFX10D1 UCFX10-114D1 UCFX10-115D1 UCFX10-200D1	162 6 3/8	130 5 1/8	20 25/32	44 1 23/32	19 3/4	59.4 2 11/32	55.6 2.189	22.2 .874	M16 5/8	FX10D1 FX10D1 FX10D1 FX10D1	UCX10D1 UCX10-114D1 UCX10-115D1 UCX10-200D1	9,780	6,570
55 2 1/16 2 1/8 2 3/16 2 1/4 2 5/16	UCFX11D1 UCFX11-201D1 UCFX11-202D1 UCFX11-203D1 UCFX11-204D1 UCFX11-205D1	175 6 7/8	143 5 5/8	20 25/32	49 1 15/16	19 3/4	68.7 2 45/64	65.1 2.563	25.4 1.000	M16 5/8	FX11D1 FX11D1 FX11D1 FX11D1 FX11D1 FX11D1	UCX11D1 UCX11-201D1 UCX11-202D1 UCX11-203D1 UCX11-204D1 UCX11-205D1	11,810	8,100
60 2 3/8 2 7/16	UCFX12D1 UCFX12-206D1 UCFX12-207D1	187 7 3/8	149 5 55/64	21 13/16	59 2 5/16	19 3/4	73.7 2 29/32	65.1 2.563	25.4 1.000	M16 5/8	FX12D1 FX12D1 FX12D1	UCX12D1 UCX12-206D1 UCX12-207D1	12,930	9,000
65 2 1/2 2 9/16	UCFX13D1 UCFX13-208D1 UCFX13-209D1	187 7 3/8	149 5 55/64	21 13/16	59 2 5/16	19 3/4	78.4 3 3/32	74.6 2.937	30.2 1.189	M16 5/8	FX13D1 FX13D1 FX13D1	UCX13D1 UCX13-208D1 UCX13-209D1	13,940	9,900
70 2 5/8 2 11/16 2 3/4	UCFX14D1 UCFX14-210D1 UCFX14-211D1 UCFX14-212D1	197 7 3/4	152 5 63/64	24 15/16	60 2 3/8	23 29/32	81.5 3 13/64	77.8 3.063	33.3 1.311	M20 3/4	FX14D1 FX14D1 FX14D1 FX14D1	UCX14D1 UCX14-210D1 UCX14-211D1 UCX14-212D1	14,840	11,130

Continued on next page.

SERIES UCFX

SET SCREW TYPE

Units: Millimeters
INCHES

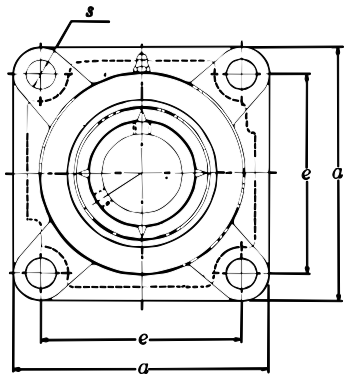

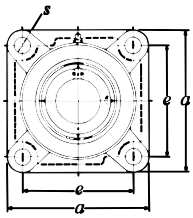

FLANGED UNITS - CAST HOUSING (FOUR BOLT)

Shaft Dia.	Complete Flanged Unit Number	Nominal Dimensions								Bolt Size	Housing Number	Bearing Number	Basic Load Ratings (lbs)	
		a	*e*	*g*	*l*	*s*	*z*	*Bi*	*n*				*Dynamic C*	*Static C_o*
75 **2 13/16** **2 7/8** **2 15/16** **3**	UCFX15D1 **UCFX15-213D1** **UCFX15-214D1** **UCFX15-215D1** **UCFX15-300D1**	197 **7 3/4**	152 **5 63/64**	24 **15/16**	68 **2 11/16**	23 **29/32**	89.3 **3 33/64**	82.6 **3.252**	33.3 **1.311**	M20 **3/4**	FX15D1 **FX15D1** **FX15D1** **FX15D1** **FX15D1**	UCX15D1 **UCX15-213D1** **UCX15-214D1** **UCX15-215D1** **UCX15-300D1**	**16,310**	**11,920**
80 **3 1/8** **3 3/16** **3 1/4**	UCFX16D1 **UCFX16-302D1** **UCFX16-303D1** **UCFX16-304D1**	214 **8 7/16**	171 **6 47/64**	24 **15/16**	70 **2 3/4**	23 **29/32**	91.6 **3 39/64**	85.7 **3.374**	34.1 **1.343**	M20 **3/4**	FX16D1 **FX16D1** **FX16D1** **FX16D1**	UCX16D1 **UCX16-302D1** **UCX16-303D1** **UCX16-304D1**	**18,780**	**14,390**
85 **3 5/16** **3 7/16**	UCFX17D1 **UCFX17-305D1** **UCFX17-307D1**	214 **8 7/16**	171 **6 47/64**	24 **15/16**	70 **2 3/4**	23 **29/32**	96.3 **3 51/64**	96 **3.780**	39.7 **1.563**	M20 **M20**	FX17D1 **FX17D1** **FX17D1**	UCX17D1 **UCX17-305D1** **UCX17-307D1**	**21,590**	**16,080**
90 **3 1/2**	UCFX18D1 **UCFX18-308D1**	214 **8 7/16**	171 **6 47/64**	24 **15/16**	76 **3**	23 **29/32**	106.1 **4 11/64**	104 **4.094**	42.9 **1.689**	M20 **3/4**	FX18D1 **FX18D1**	UCX18D1 **UCX18-308D1**	**24,520**	**18,440**
100 **3 7/8** **3 15/16** **4**	UCFX20D1 **UCFX20-314D1** **UCFX20-315D1** **UCFX20-400D1**	268 **10 9/16**	211 **8 5/16**	31 **1 7/32**	97 **3 13/16**	31 **1 7/32**	127.3 **5 1/64**	117.5 **4.626**	49.2 **1.937**	M27 **1**	FX20D1 **FX20D1** **FX20D1** **FX20D1**	UCX20D1 **UCX20-314D1** **UCX20-315D1** **UCX20-400D1**	**29,910**	**23,620**

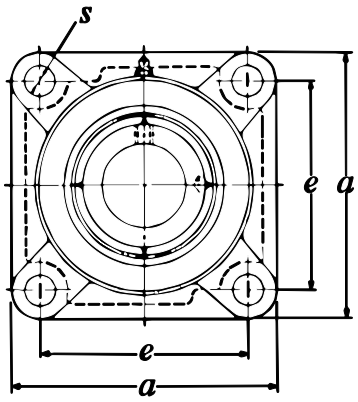

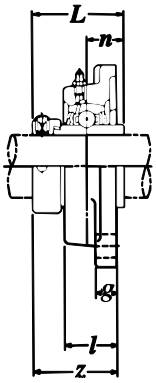

Units: Millimeters
INCHES

NTN

SERIES UELF2

ECCENTRIC LOCKING COLLAR TYPE

FLANGED UNITS - CAST HOUSING (FOUR BOLT)

Shaft Dia.	Complete Flanged Unit Number	Nominal Dimensions a	e	g	l	s	z	L	Di	n	Bolt Size	Housing Number	Bearing Number	Basic Load Ratings (lbs) Dynamic C	Static C_o
20 3/4	UELF204D1 **UELF204-012D1**	86 **3 3/8**	64 **2 33/64**	11 **7/16**	25.5 **1**	12 **15/32**	41.6 **1 41/64**	43.7 **1.720**	33 **1.299**	17.1 **.673**	M10 **5/16**	F204D1 **F204D1**	UEL204D1 **UEL204-012D1**	**2,890**	**1,500**
25 13/16 7/8 15/16 1	UELF205D1 **UELF205-013D1** **UELF205-014D1** **UELF205-015D1** **UELF205-100D1**	95 **3 3/4**	70 **2 3/4**	13 **1/2**	27 **1 1/16**	12 **15/32**	42.9 **1 11/16**	44.4 **1.748**	38 **1.496**	17.5 **.689**	M10 **3/8**	F205D1 **F205D1** **F205D1** **F205D1** **F205D1**	UEL205D1 **UEL205-013D1** **UEL205-014D1** **UEL205-015D1** **UEL205-100D1**	**3,150**	**1,770**
30 1 1/16 1 1/8 1 3/16 1 1/4	UELF206D1 **UELF206-101D1** **UELF206-102D1** **UELF206-103D1** **UELF206-104D1**	108 **4 1/4**	83 **3 17/64**	13 **1/2**	31 **1 7/32**	12 **15/32**	48.1 **1 57/64**	48.4 **1.906**	44.5 **1.752**	18.3 **.720**	M10 **3/8**	F206D1 **F206D1** **F206D1** **F206D1** **F206D1**	UEL206D1 **UEL206-101D1** **UEL206-102D1** **UEL206-103D1** **UEL206-104D1**	**4,400**	**2,540**
35 1 1/4 1 5/16 1 3/8 1 7/16	UELF207D1 **UELF207-104D1** **UELF207-105D1** **UELF207-106D1** **UELF207-107D1**	117 **4 19/32**	92 **3 5/8**	15 **19/32**	34 **1 11/32**	14 **35/64**	51.3 **2 1/64**	51.1 **2.012**	55.5 **2.185**	18.8 **.740**	M12 **7/16**	F207D1 **F207D1** **F207D1** **F207D1** **F207D1**	UEL207D1 **UEL207-104D1** **UEL207-105D1** **UEL207-106D1** **UEL207-107D1**	**5,750**	**3,440**
40 1 1/2 1 9/16	UELF208D1 **UELF208-108D1** **UELF208-109D1**	130 **5 1/8**	102 **4 1/64**	15 **19/32**	36 **1 13/32**	16 **5/8**	55.9 **2 13/64**	56.3 **2.217**	60 **2.362**	21.4 **.843**	M14 **1/2**	F207D1 **F208D1** **F208D1**	UEL208D1 **UEL208-108D1** **UEL208-109D1**	**6,550**	**4,000**
45 1 5/8 1 11/16 1 3/4	UELF209D1 **UELF209-110D1** **UELF209-111D1** **UELF209-112D1**	137 **5 13/32**	105 **4 9/64**	16 **5/8**	38 **1 1/2**	16 **5/8**	56.9 **2 15/64**	56.3 **2.217**	63.5 **2.500**	21.4 **.843**	M14 **1/2**	F209D1 **F209D1** **F209D1** **F209D1**	UEL209D1 **UEL209-110D1** **UEL209-111D1** **UEL209-112D1**	**7,350**	**4,590**
50 1 13/16 1 7/8 1 15/16 2	UELF210D1 **UELF210-113D1** **UELF210-114D1** **UELF210-115D1** **UELF210-200D1**	143 **5 5/8**	111 **4 3/8**	16 **5/8**	40 **1 9/16**	16 **5/8**	60.1 **2 23/64**	62.7 **2.469**	69.5 **2.736**	24.6 **.969**	M14 **1/2**	F210D1 **F210D1** **F210D1** **F210D1** **F210D1**	UEL210D1 **UEL210-113D1** **UEL210-114D1** **UEL210-115D1** **UEL210-200D1**	**7,900**	**5,220**
55 2 2 1/16 2 1/8 2 3/16	UELF211D1 **UELF211-200D1** **UELF211-201D1** **UELF211-202D1** **UELF211-203D1**	162 **6 3/8**	130 **5 1/8**	18 **23/32**	43 **1 11/16**	19 **3/4**	68.6 **2 45/64**	71.4 **2.811**	76 **2.992**	27.8 **1.094**	M16 **9/16**	F211D1 **F211D1** **F211D1** **F211D1** **F211D1**	UEL211D1 **UEL211-200D1** **UEL211-201D1** **UEL211-202D1** **UEL211-203D1**	**9,750**	**6,570**
60 2 1/4 2 3/8 2 7/16	UELF212D1 **UELF212-204D1** **UELF212-206D1** **UELF212-207D1**	175 **6 7/8**	143 **5 5/8**	18 **23/32**	48 **1 7/8**	19 **3/4**	75.8 **2 63/64**	77.8 **3.063**	84 **3.307**	31 **1.220**	M16 **9/16**	F212D1 **F212D1** **F212D1** **F212D1**	UEL212D1 **UEL212-204D1** **UEL212-206D1** **UEL212-207D1**	**11,800**	**8,100**
65 2 1/2	UELF213D1 **UELF213-208D1**	187 **7 3/8**	149 **5 55/64**	22 **7/8**	50 **1 31/32**	19 **3/4**	81.55 **3 13/64**	85.7 **3.374**	97 **3.819**	34.15 **1.344**	M16 **9/16**	F213D1 **F213D1**	UEL213D1 **UEL213-208D1**	**12,900**	**9,000**
70 2 11/16 2 3/4	UELF214D1 **UELF214-211D1** **UELF214-212D1**	193 **7 19/32**	152 **5 63/64**	22 **7/8**	54 **2 1/8**	19 **3/4**	82.55 **3 1/4**	85.7 **3.374**	97 **3.819**	34.15 **1.344**	M16 **9/16**	F214D1 **F214D1** **F214D1**	UEL214D1 **UEL214-211D1** **UEL214-212D1**	**14,000**	**9,900**
75 2 15/16 3	UELF215D1 **UELF215-215D1** **UELF215-300D1**	200 **7 7/8**	159 **6 17/64**	22 **7/8**	56 **2 7/32**	19 **3/4**	88.7 **3 31/64**	92 **3.622**	102 **4.016**	37.3 **1.469**	M16 **9/16**	F215D1 **F215D1** **F215D1**	UEL215D1 **UEL215-215D1** **UEL215-300D1**	**14,900**	**11,130**

NTN

SERIES UELF3

ECCENTRIC LOCKING COLLAR TYPE

Units: Millimeters
INCHES

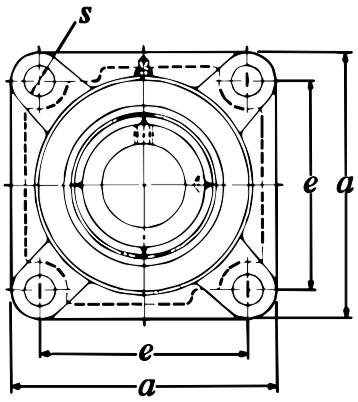

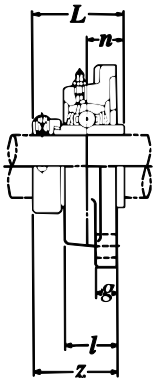

FLANGED UNITS - CAST HOUSING (FOUR BOLT)

Shaft Dia.	Complete Flanged Unit Number	Nominal Dimensions a	e	g	l	s	z	L	Di	n	Bolt Size	Housing Number	Bearing Number	Basic Load Ratings (lbs) Dynamic C	Static C_o
25 7/8 15/16 1	UELF305D1 UELF305-014D1 UELF305-015D1 UELF305-100D1	110 4 11/32	80 3 5/32	13 1/2	29 1 5/32	16 5/8	46.1 1 13/16	46.8 1.843	42.8 1.685	16.7 .657	M14 1/2	F305D1 F305D1 F305D1 F305D1	UEL305D1 UEL305-014D1 UEL305-015D1 UEL305-100D1	4,750	2,460
30 1 1/8 1 3/16	UELF306D1 UELF306-102D1 UELF306-103D1	125 4 29/32	95 3 47/64	15 19/32	32 1 1/4	16 5/8	50.5 1 63/64	50 1.969	50 1.969	17.5 .689	M14 1/2	F306D1 F306D1 F306D1	UEL306D1 UEL306-102D1 UEL306-103D1	6,000	3,400
35 1 1/4 1 5/16 1 3/8 1 7/16	UELF307D1 UELF307-104D1 UELF307-105D1 UELF307-106D1 UELF307-107D1	135 5 5/16	100 3 15/16	16 5/8	36 1 13/32	19 3/4	53.3 2 3/32	51.6 2.031	55 2.165	18.3 .720	M16 5/8	F307D1 F307D1 F307D1 F307D1 F307D1	UEL307D1 UEL307-104D1 UEL307-105D1 UEL307-106D1 UEL307-107D1	7,500	4,300
40 1 1/2	UELF308D1 UELF308-108D1	150 5 29/32	112 4 13/32	17 21/32	40 1 9/16	19 3/4	60.3 2 3/8	57.1 2.248	63.5 2.500	19.8 .780	M16 5/8	F308D1 F308D1	UEL308D1 UEL308-108D1	9,150	5,400
45 1 5/8 1 11/16 1 3/4	UELF309D1 UELF309-110D1 UELF309-111D1 UELF309-112D1	160 6 5/16	125 4 59/64	18 23/32	44 1 23/32	19 3/4	63.9 2 33/64	58.7 2.311	70 2.756	19.8 .780	M16 5/8	F309D1 F309D1 F309D1 F309D1	UEL309D1 UEL309-110D1 UEL309-111D1 UEL309-112D1	11,900	7,200
50 1 7/8 1 15/16	UELF310D1 UELF310-114D1 UELF310-115D1	175 6 7/8	132 5 13/64	19 3/4	48 1 7/8	23 29/32	70 2 3/4	66.6 2.622	76.2 3.000	24.6 .969	M20 3/4	F310D1 F310D1 F310D1	UEL310D1 UEL310-114D1 UEL310-115D1	13,900	8,600
55 2 2 1/8 2 3/16	UELF311D1 UELF311-200D1 UELF311-202D1 UELF311-203D1	185 7 9/32	140 5 33/64	20 25/32	52 2 1/16	23 29/32	75.2 2 61/64	73 2.874	83 3.268	27.8 1.094	M20 3/4	F311D1 F311D1 F311D1 F311D1	UEL311D1 UEL311-200D1 UEL311-202D1 UEL311-203D1	16,100	10,100
60 2 1/4 2 3/8 2 7/16	UELF312D1 UELF312-204D1 UELF312-206D1 UELF312-207D1	195 7 11/16	150 5 29/32	22 7/8	56 2 7/32	23 29/32	81.45 3 13/64	79.4 3.126	89 3.504	30.95 1.219	M20 3/4	F312D1 F312D1 F312D1 F312D1	UEL312D1 UEL312-204D1 UEL312-206D1 UEL312-207D1	18,400	11,700
65 2 1/2	UELF313D1 UELF313-208D1	208 8 3/16	166 6 17/32	22 7/8	58 2 9/32	23 29/32	86.15 3 25/64	85.7 3.374	97 3.819	32.55 1.281	M20 3/4	F313D1 F313D1	UEL313D1 UEL313-208D1	20,800	13,400
70 2 11/16 2 3/4	UELF314D1 UELF314-211D1 UELF314-212D1	226 8 29/32	178 7	25 31/32	61 2 13/32	25 63/64	93.95 3 45/64	92.1 3.626	102 4.016	34.15 1.344	M22 7/8	F314D1 F314D1 F314D1	UEL314D1 UEL314-211D1 UEL314-212D1	23,400	15,300
75 2 15/16 3	UELF315D1 UELF315-215D1 UELF315-300D1	236 9 9/32	184 7 1/4	25 31/32	66 2 19/32	25 63/64	101.7 4	100 3.937	113 4.449	37.3 1.469	M22 7/8	F315D1 F315D1 F315D1	UEL315D1 UEL315-215D1 UEL315-300D1	25,500	17,400
80 3 1/8 3 3/16	UELF316D1 UELF316-302D1 UELF316-303D1	250 9 27/32	196 7 23/32	27 1 1/16	68 2 11/16	31 1 7/32	103.9 4 3/32	106.4 4.189	119 4.685	40.5 1.594	M27 1	F316D1 F316D1 F316D1	UEL316D1 UEL316-302D1 UEL316-303D1	27,600	19,500
85 3 1/4	UELF317D1 UELF317-304D1	260 10 1/4	204 8 1/32	27 1 1/16	74 2 29/32	31 1 7/32	111.45 4 25/64	109.5 4.311	127 5.000	42.05 1.656	M27 1	F317D1 F317D1	UEL317D1 UEL317-304D1	29,800	21,800
90 3 7/16 3 1/2	UELF318D1 UELF318-307D1 UELF318-308D1	280 11 1/32	216 8 1/2	30 1 3/16	76 3	35 1 3/8	116.25 4 37/64	115.9 4.563	133 5.236	43.65 1.719	M30 1 1/8	F318D1 F318D1 F318D1	UEL318D1 UEL318-307D1 UEL318-308D1	32,000	24,100
95 3 3/4	UELF319D1 UELF319-312D1	290 11 13/32	228 8 31/32	30 1 3/16	94 3 11/16	35 1 3/8	142.4 5 39/64	122.3 4.815	140 5.512	38.9 1.531	M30 1 1/8	F319D1 F319D1	UEL319D1 UEL319-312D1	34,500	26,600
100 3 15/16 4	UELF320D1 UELF320-315D1 UELF320-400D1	310 12 7/32	242 9 17/32	32 1 1/4	94 3 11/16	38 1 1/2	137.6 5 27/64	128.6 5.063	146 5.748	50 1.969	M33 1 1/4	F320D1 F320D1 F320D1	UEL320D1 UEL320-315D1 UEL320-400D1	39,000	31,500
105	UELF321D1	310	242	32	94	38	150.3	139.7	157	48.4	M33	F321D1	UEL321D1	41,500	34,500
110	UELF322D1	340	266	35	96	41	152.1	141.3	168	49.2	M36	F322D1	UEL322D1	46,000	40,500

Units: Millimeters
INCHES

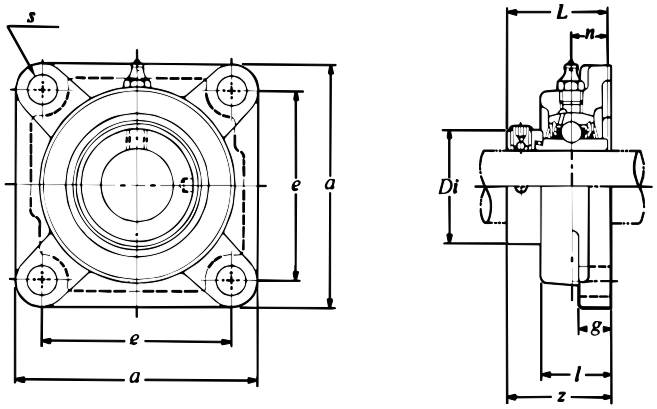

NTN

SERIES UELFU2

ECCENTRIC LOCKING COLLAR TYPE

FLANGED UNITS - CAST HOUSING (FOUR BOLT)

Shaft Dia.	Complete Flanged Unit Number	Nominal Dimensions									Bolt Size	Housing Number	Bearing Number	Basic Load Ratings (lbs)	
		a	*e*	*g*	*l*	*s*	*z*	*L*	*Di*	*n*				*Dynamic C*	*Static C_o*
20 3/4	UELFU204D1 **UELFU204-012D1**	86 **3 3/8**	63.5 **2 1/2**	15 **19/32**	29.5 **1 5/32**	11.5 **25/64**	45.6 **1 51/64**	43.7 **1.720**	33.3 **1.31**	17.1 **.673**	M10 **5/16**	FU204D1 **FU204D1**	UEL204D1 **UEL204-012D1**	**2,890**	**1,500**
25 13/16 7/8 15/16 1	UELFU205D1 **UELFU205-013D1** **UELFU205-014D1** **UELFU205-015D1** **UELFU205-100D1**	96 **3 25/32**	70 **2 3/4**	15 **19/32**	30 **1 3/16**	11.5 **29/64**	45.9 **1 13/16**	44.4 **1.748**	38.1 **1.50**	17.5 **.689**	M10 **3/8**	FU205D1 **FU205D1** **FU205D1** **FU205D1** **FU205D1**	UEL205D1 **UEL205-013D1** **UEL205-014D1** **UEL205-015D1** **UEL205-100D1**	**3,150**	**1,770**
30 1 1/16 1 1/8 1 3/16 1 1/4	UELFU206D1 **UELFU206-101D1** **UELFU206-102D1** **UELFU206-103D1** **UELFU206-104D1**	109 **4 9/32**	82.5 **3 1/4**	16 **5/8**	33 **1 5/16**	11.5 **29/64**	50.1 **1 31/32**	48.4 **1.906**	44.5 **1.75**	18.3 **.720**	M10 **3/8**	FU206D1 **FU206D1** **FU206D1** **FU206D1** **FU206D1**	UEL206D1 **UEL206-101D1** **UEL206-102D1** **UEL206-103D1** **UEL206-104D1**	**4,400**	**2,540**
35 1 1/4 1 5/16 1 3/8 1 7/16	UELFU207D1 **UELFU207-104D1** **UELFU207-105D1** **UELFU207-106D1** **UELFU207-107D1**	118 **4 21/32**	92 **3 5/8**	17 **21/32**	36 **1 13/32**	14 **35/64**	53.3 **2 3/32**	51.1 **2.012**	55.6 **2.19**	18.8 **.740**	M12 **7/16**	FU207D1 **FU207D1** **FU207D1** **FU207D1** **FU207D1**	UEL207D1 **UEL207-104D1** **UEL207-105D1** **UEL207-106D1** **UEL207-107D1**	**5,750**	**3,440**
40 1 1/2 1 9/16	UELFU208D1 **UELFU208-108D1** **UELFU208-109D1**	131 **5 5/32**	101.5 **4**	17 **21/32**	39 **1 17/32**	14 **35/64**	58.9 **2 5/16**	56.3 **2.217**	60.2 **2.37**	21.4 **.843**	M12 **7/16**	FU207D1 **FU208D1** **FU208D1**	UEL208D1 **UEL208-108D1** **UEL208-109D1**	**6,550**	**4,000**
45 1 5/8 1 11/16 1 3/4	UELFU209D1 **UELFU209-110D1** **UELFU209-111D1** **UELFU209-112D1**	137 **5 13/32**	105 **4 9/64**	18 **23/32**	40 **1 9/16**	16 **5/8**	58.9 **2 5/16**	56.3 **2.217**	63.5 **2.50**	21.4 **.843**	M14 **1/2**	FU209D1 **FU209D1** **FU209D1** **FU209D1**	UEL209D1 **UEL209-110D1** **UEL209-111D1** **UEL209-112D1**	**7,350**	**4,590**
50 1 13/16 1 7/8 1 15/16 2	UELFU210D1 **UELFU210-113D1** **UELFU210-114D1** **UELFU210-115D1** **UELFU210-200D1**	144 **5 21/32**	111 **4 3/8**	20 **25/32**	46 **1 13/16**	18 **45/64**	66.1 **2 39/64**	62.7 **2.469**	69.9 **2.75**	24.6 **.969**	M16 **1/2**	FU210D1 **FU210D1** **FU210D1** **FU210D1** **FU210D1**	UEL210D1 **UEL210-113D1** **UEL210-114D1** **UEL210-115D1** **UEL210-200D1**	**7,900**	**5,220**
55 2 2 1/16 2 1/8 2 3/16	UELFU211D1 **UELFU211-200D1** **UELFU211-201D1** **UELFU211-202D1** **UELFU211-203D1**	163 **6 13/32**	130 **5 1/8**	21 **13/16**	49 **1 15/16**	18 **45/64**	74.6 **2 15/16**	71.4 **2.811**	76.2 **3.00**	27.8 **1.094**	M16 **9/16**	FU211D1 **FU211D1** **FU211D1** **FU211D1** **FU211D1**	UEL211D1 **UEL211-200D1** **UEL211-201D1** **UEL211-202D1** **UEL211-203D1**	**9,750**	**6,570**
60 2 1/4 2 3/8 2 7/16	UELFU212D1 **UELFU212-204D1** **UELFU212-206D1** **UELFU212-207D1**	175 **6 7/8**	143 **5 5/8**	21 **13/16**	53 **2 3/32**	18 **45/64**	80.8 **3 3/16**	77.8 **3.063**	84.1 **3.31**	31 **1.220**	M16 **9/16**	FU212D1 **FU212D1** **FU212D1** **FU212D1**	UEL212D1 **UEL212-204D1** **UEL212-206D1** **UEL212-207D1**	**11,800**	**8,100**
65 2 1/2	UELFU213D1 **UELFU213-208D1**	187 **7 3/8**	149 **5 55/64**	22 **7/8**	59 **2 5/16**	20.5 **13/16**	89.55 **3 17/32**	85.7 **3.374**	97.0 **3.82**	34.15 **1.344**	M18 **5/8**	FU213D1 **FU213D1**	UEL213D1 **UEL213-208D1**	**12,900**	**9,000**
70 2 11/16 2 3/4	UELFU214D1 **UELFU214-211D1** **UELFU214-212D1**	193 **7 19/32**	152 **5 63/64**	22 **7/8**	62 **2 7/16**	20.5 **13/16**	89.55 **3 17/32**	85.7 **3.374**	97.0 **3.82**	34.15 **1.344**	M18 **5/8**	FU214D1 **FU214D1** **FU214D1**	UEL214D1 **UEL214-211D1** **UEL214-212D1**	**14,000**	**9,900**
75 2 15/16 3	UELFU215D1 **UELFU215-215D1** **UELFU215-300D1**	200 **7 7/8**	159 **6 17/64**	22 **7/8**	65 **2 9/16**	20.5 **13/16**	95.7 **3 49/64**	92 **3.622**	102 **4.02**	37.3 **1.469**	M18 **5/8**	FU215D1 **FU215D1** **FU215D1**	UEL215D1 **UEL215-215D1** **UEL215-300D1**	**14,900**	**11,130**

NTN

SERIES UKF2

ADAPTER TYPE

Units: Millimeters
INCHES

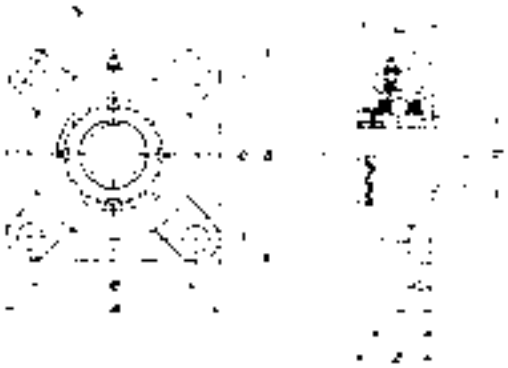

FLANGED UNITS - CAST HOUSING (4 BOLT)

Shaft Dia.	Unit Number 1) 2) 3)	Nominal Dimensions									Bolt Size mm inch	Housing Number	Bearing and Adapter Number	Basic Load Ratings (lbs)	
		a	*e*	*i*	*g*	*l*	*s*	*z*	*L*	*F min*				*Dynamic C*	*Static C_0*
20	UKF205D1 ; H 2305X	95	70	16	13	27	12	35.5	35	30	M10	F205D1	UK205D1 ; H 2305X	3,150	1,770
3/4	UKF205D1 ; HE2305	3 3/4	2 3/4	5/8	1/2	1 1/16	15/32	1 25/64	1.378	1 3/16	3/8		UK205D1 ; HE2305		
25	UKF206D1 ; H 2306X	108	83	18	13	31	12	39	38	36	M10	F206D1	UK206D1 ; H 2306X	4,400	2,540
7/8	UKF206D1 ; HS2306	4 1/4	3 9/32	45/64	1/2	1 7/32	15/32	1 17/32	1.496	1.406	3/8		UK206D1 ; HS2306		
1	UKF206D1 ; HE2306X												UK206D1 ; HE2306X		
30	UKF207D1 ; H 2307X	117	92	19	15	34	14	42.5	43	40	M12	F207D1	UK207D1 ; H 2307X	5,750	3,440
1 1/8	UKF207D1 ; HS2307	4 19/32	3 5/8	3/4	19/32	1 11/32	35/34	1 43/64	1.693	1 9/16	1/2		UK207D1 ; HS2307		
35	UKF208D1 ; HE2308X	130	102	21	15	36	16	46.5	46	46	M14	F208D1	UK208D1 ; H 2308X	6,550	4,000
1 1/4	UKF208D1 ; H 2308X	5 1/8	4 1/32	53/64	19/32	1 13/32	5/8	1 53/64	1.811	1 13/16	1/2		UK208D1 ; HE2308X		
1 3/8	UKF208D1 ; HS2308X												UK208D1 ; HS2308X		
40	UKF209D1 ; H 2309X	137	105	22	16	38	16	48.5	50	52	M14	F209D1	UK209D1 ; H 2309X	7,350	4,600
1 7/16	UKF209D1 ; HA2309	5 13/32	4 1/8	55/64	5/8	1 1/2	5/8	1 29/32	1.969	2 1/16	1/2		UK209D1 ; HA2309		
1 1/2	UKF209D1 ; HE2309X												UK209D1 ; HE2309X		
1 5/8	UKF209D1 ; HS2309X												UK209D1 ; HS2309X		
45	UKF210D1 ; H 2310X	143	111	22	16	40	16	50	55	57	M14	F210D1	UK210D1 ; H 2310X	7,900	5,200
1 5/8	UKF210D1 ; HS2310	5 5/8	4 3/8	55/64	5/8	1 9/16	5/8	1 31/32	2.165	2 1/4	1/2		UK210D1 ; HS2310		
1 11/16	UKF210D1 ; HA2310												UK210D1 ; HA2310		
1 3/4	UKF210D1 ; HE2310X												UK210D1 ; HE2310X		
50	UKF211D1 ; H 2311X	162	130	25	18	43	19	54.5	59	64	M16	F211D1	UK211D1 ; H 2311X	9,750	6,550
1 7/8	UKF211D1 ; HS2311	6 3/8	5 1/8	63/64	23/32	1 11/16	3/4	2 9/64	2.323	2 17/32	5/8		UK211D1 ; HS2311		
1 15/16	UKF211D1 ; HA2311												UK211D1 ; HA2311		
2	UKF211D1 ; HE2311XY												UK211D1 ; HE2311XY		
55	UKF212D1 ; H 2312X	175	143	29	18	48	19	61	62	69	M16	F212D1	UK212D1 ; H 2312X	11,800	8,150
2 1/8	UKF212D1 ; HS2312	6 7/8	5 5/8	1 9/64	23/32	1 7/8	3/4	2 13/32	2.441	2 23/32	5/8		UK212D1 ; HS2312		
60	UKF213D1 ; H 2313X	187	149	30	22	50	19	64	65	74	M16	F213D1	UK213D1 ; H 2313X	12,900	9,000
2 3/16	UKF213D1 ; HA2313	7 3/8	5 7/8	1 3/16	7/8	1 7/32	3/4	2 33/64	2.559	2 29/32	5/8		UK213D1 ; HA2313		
2 1/4	UKF213D1 ; HE2313												UK213D1 ; HE2313		
2 3/8	UKF213D1 ; HS2313												UK213D1 ; HS2313		
65	UKF215D1 ; H 2315X	200	159	34	22	56	19	71	73	84	M16	F215D1	UK215D1 ; H 2315X	14,900	11,100
2 7/16	UKF215D1 ; HA2315	7 7/8	6 1/4	1 11/32	7/8	2 7/32	3/4	2 51/64	2.874	3 5/16	5/8		UK215D1 ; HA2315		
2 1/2	UKF215D1 ; HE2315												UK215D1 ; HE2315		
70	UKF216D1 ; H 2316X	208	165	34	22	58	23	73.5	78	90	M20	F216D1	UK216D1 ; H 2316X	16,300	11,900
2 11/16	UKF216D1 ; HA2316	8 3/16	6 1/2	1 11/32	7/8	2 9/32	29/32	2 57/64	3.071	3 17/32	3/4		UK216D1 ; HA2316		
2 3/4	UKF216D1 ; HE2316												UK216D1 ; HE2316		
75	UKF217D1 ; H 2317X	220	175	36	24	63	23	77	82	95	M20	F217D1	UK217D1 ; H 2317X	18,700	14,300
2 15/16	UKF217D1 ; HA2317	8 21/32	6 7/8	1 27/64	15/16	2 15/32	29/32	3 1/32	3.228	3 3/4	3/4		UK217D1 ; HA2317		
3	UKF217D1 ; HE2317												UK217D1 ; HE2317		
80	UKF218D1 ; H 2318X	235	187	40	24	68	23	81.5	86	102	M20	F218D1	UK218D1 ; H 2318X	21,600	16,100
3 3/16	UKF218D1 ; HA2318	9 1/4	7 3/8	1 37/64	15/16	2 11/16	29/32	3 13/64	3.386	4 1/32	3/4		UK218D1 ; HA2318		

1) These numbers indicate re-lubricatable type. If maintenance free type is needed, please order without suffix "D1".

2) Adapter number with suffx "X" means a narrow slot type adapter sleeve. In this case the lock washer with the straight inner prong should be used.

3) For HE2311XY, screw thread pitch different from teh standard is applied, because of the thin thread section of sleeve. To distinguish it, a suffix "Y" is added.

Note: Please refer to NTN Engineering for grease fitting details.

Bearing Series → UCFL2 SERIES

UCFL201D1..... 1.3

Complete Flanged Unit Number

Weight (lbs)

NTN BEARING WEIGHTS

FLANGED UNITS — LBS.

UCFL2 SERIES

UCFL201D1	1.3
UCFL201-008D1	1.3
UCFL202D1	1.3
UCFL202-009D1	1.3
UCFL202-010D1	1.3
UCFL203D1	1.1
UCFL203-011D1	1.1
UCFL204D1	1.1
UCFL204-012D1	1.1
UCFL205D1	1.3
UCFL205-013D1	1.3
UCFL205-014D1	1.3
UCFL205-015D1	1.3
UCFL205-100D1	1.3
UCFL206D1	2.00
UCFL206-101D1	2.00
UCFL206-102D1	2.00
UCFL206-103D1	2.00
UCFL206-104D1	2.00
UCFL207D1	2.6
UCFL207-104D1	2.6
UCFL207-105D1	2.6
UCFL207-106D1	2.6
UCFL207-107D1	2.6
UCFL208D1	3.5
UCFL208-108D1	3.5
UCFL208-109D1	3.5
UCFL209D1	4.2
UCFL209-110D1	4.2
UCFL209-111D1	4.2
UCFL209-112D1	4.2
UCFL210D1	4.9
UCFL210-113D1	4.9
UCFL210-114D1	4.9
UCFL210-115D1	4.9
UCFL210-200D1	4.9
UCFL211D1	6.8
UCFL211-200D1	6.8
UCFL211-201D1	6.8
UCFL211-202D1	6.8
UCFL211-203D1	6.8
UCFL212D1	8.8
UCFL212-204D1	8.8
UCFL212-206D1	8.8
UCFL212-207D1	8.8
UCFL213D1	11
UCFL213-208D1	11
UCFL214D1	12
UCFL214-211D1	12
UCFL214-212D1	12
UCFL215D1	14
UCFL215-215D1	14
UCFL215-300D1	14
UCFL215D1	14
UCFL216-302D1	18
UCFL217D1	21
UCFL217-304D1	21
UCFL218D1	24
UCFL218-308D1	24

UCFL3 SERIES

UCFL305D1	3.3
UCFL305-014D1	3.3
UCFL305-015D1	3.3
UCFL305-100D1	3.3
UCFL306D1	4.2
UCFL306-102D1	4.2
UCFL306-103D1	4.2
UCFL307D1	5.1
UCFL307-104D1	5.1
UCFL307-105D1	5.1
UCFL307-106D1	5.1
UCFL307-107D1	5.1
UCFL308D1	7.3
UCFL308-108D1	7.3
UCFL309D1	9.3
UCFL309-110D1	9.3
UCFL309-111D1	9.3
UCFL309-112D1	9.3
UCFL310D1	12.0
UCFL310-114D1	12.0
UCFL310-115D1	12.0
UCFL311D1	14.0
UCFL311-200D1	14.0
UCFL311-202D1	14.0
UCFL311-203D1	12.0
UCFL312D1	17.0
UCFL312-204D1	17.0
UCFL312-206D1	17.0
UCFL312-207D1	17.0
UCFL313D1	22.0
UCFL313-208D1	22.0
UCFL314D1	26.0
UCFL314-211D1	26.0
UCFL314-212D1	26.0
UCFL315D1	26.0
UCFL315-215D1	26.0
UCFL315-300D1	26.0
UCFL316D1	35.0
UCFL316-302D1	35.0
UCFL316-303D1	35.0
UCFL317D1	40.0
UCFL317-304D1	40.0
UCFL318D1	46.0
UCFL318-307D1	46.0
UCFL318-308D1	46.0
UCFL319D1	57.0
UCFL319-312D1	57.0
UCFL320D1	68.0
UCFL320-315D1	68.0
UCFL320-400D1	68.0
UCFL321D1	71.0
UCFL322D1	86.0
UCFL324D1	115.0
UCFL326D1	141.0
UCFL328D1	196.0

UCFLX SERIES

UCFLX05D1	2.2
UCFLX05-013D1	2.2
UCFLX05-014D1	2.2
UCFLX05-015D1	2.2
UCFLX05-100D1	2.2
UCFLX06D1	3.3
UCFLX06-101D1	3.3
UCFLX06-102D1	3.3
UCFLX06-103D1	3.3
UCFLX06-104D1	3.3
UCFLX07D1	4.4
UCFLX07-105D1	4.4
UCFLX07-106D1	4.4
UCFLX07-107D1	4.4
UCFLX08D1	4.9
UCFLX08-108D1	4.9
UCFLX08-109D1	4.9
UCFLX09D1	5.3
UCFLX09-110D1	5.3
UCFLX09-111D1	5.3
UCFLX09-112D1	5.3
UCFLX09-113D1	5.3
UCFLX10D1	7.5
UCFLX10-114D1	7.5
UCFLX10-115D1	7.5
UCFLX10-200D1	7.5

UELFL2 SERIES

UELFL204D1	1.3
UELFL204-012D1	1.3
UELFL205D1	1.5
UELFL205-013D1	1.5
UELFL205-014D1	1.5
UELFL205-015D1	1.5
UELFL205-100D1	1.5
UELFL206D1	2.2
UELFL206-101D1	2.2
UELFL206-102D1	2.2
UELFL206-103D1	2.2
UELFL206-104D1	2.2
UELFL207D1	2.9
UELFL207-104D1	2.9
UELFL207-105D1	2.9
UELFL207-106D1	2.9
UELFL207-107D1	2.9
UELFL208D1	3.7
UELFL208-108D1	3.7
UELFL208-109D1	3.7
UELFL209D1	4.4
UELFL209-110D1	4.4
UELFL209-111D1	4.4
UELFL209-112D1	4.4
UELFL210D1	5.1
UELFL210-113D1	5.1
UELFL210-114D1	5.1
UELFL210-115D1	5.1
UELFL210-200D1	5.1
UELFL211D1	7.3
UELFL211-200D1	7.3
UELFL211-201D1	7.3
UELFL211-202D1	7.3
UELFL211-203D1	7.3
UELFL212D1	9.5
UELFL212-204D1	9.5
UELFL212-206D1	9.5
UELFL212-207D1	9.5
UELFL213D1	12.0
UELFL213-208D1	12.0
UELFL214D1	13.0
UELFL214-211D1	13.0
UELFL214-212D1	13.0
UELFL215D1	14.0
UELFL215-215D1	14.0
UELFL215-300D1	14.0

UELFL3 SERIES

UELFL305D1	2.4
UELFL305-014D1	2.4
UELFL305-015D1	2.4
UELFL305-100D1	2.4
UELFL306D1	3.5
UELFL306-102D1	3.5
UELFL306-103D1	3.5
UELFL307D1	4.4
UELFL307-104D1	4.4
UELFL307-105D1	4.4
UELFL307-106D1	4.4
UELFL307-107D1	4.4
UELFL308D1	5.7
UELFL308-108D1	5.7
UELFL309D1	7.9
UELFL309-110D1	7.9
UELFL309-111D1	7.9
UELFL309-112D1	7.9
UELFL310D1	10.0
UELFL310-114D1	10.0
UELFL310-115D1	10.0
UELFL311D1	12.0
UELFL311-200D1	12.0
UELFL311-202D1	12.0
UELFL311-203D1	12.0
UELFL312D1	14.0
UELFL312-204D1	14.0
UELFL312-206D1	14.0
UELFL312-207D1	14.0
UELFL313D1	18.0
UELFL313-208D1	18.0
UELFL314D1	21.0
UELFL314-211D1	21.0
UELFL314-212D1	21.0
UELFL315D1	24.0
UELFL315-215D1	24.0
UELFL315-300D1	24.0
UELFL316D1	31.0
UELFL316-302D1	31.0
UELFL316-303D1	31.0
UELFL317D1	35.0
UELFL317-304D1	35.0
UELFL318D1	42.0
UELFL318-307D1	42.0
UELFL318-308D1	42.0
UELFL319D1	53.0
UELFL319-312D1	53.0
UELFL320D1	64.0
UELFL320-315D1	64.0
UELFL320-400D1	64.0
UELFL321D1	66.0
UELFL322D1	79.0

UELFLU2 SERIES

UELFLU204D1	1.3
UELFLU204-012D1	1.3
UELFLU205D1	1.8
UELFLU205-013D1	1.8
UELFLU205-014D1	1.8
UELFLU205-015D1	1.8
UELFLU205-100D1	1.8
UELFLU206D1	2.4
UELFLU206-101D1	2.4
UELFLU206-102D1	2.4
UELFLU206-103D1	2.4
UELFLU206-104D1	2.4
UELFLU207D1	3.1
UELFLU207-104D1	3.1
UELFLU207-105D1	3.1
UELFLU207-106D1	3.1
UELFLU207-107D1	3.1
UELFLU208D1	4.0
UELFLU208-108D1	4.0
UELFLU208-109D1	4.0
UELFLU209D1	4.6
UELFLU209-110D1	4.6
UELFLU209-111D1	4.6
UELFLU209-112D1	4.6
UELFLU210D1	5.5
UELFLU210-113D1	5.5
UELFLU210-114D1	5.5
UELFLU210-115D1	5.5
UELFLU210-200D1	5.5
UELFLU211D1	7.7
UELFLU211-200D1	7.7
UELFLU211-201D1	7.7
UELFLU211-202D1	7.7
UELFLU211-203D1	7.7
UELFLU212D1	9.9
UELFLU212-204D1	9.9
UELFLU212-206D1	9.9
UELFLU212-207D1	9.9
UELFLU213D1	12.0
UELFLU213-208D1	12.0
UELFLU214D1	13.0
UELFLU214-211D1	13.0
UELFLU214-212D1	13.0
UELFLU215D1	15.0
UELFLU215-215D1	15.0
UELFLU215-300D1	15.0

AELFL2 SERIES

AELFL204D1	1.2
AELFL204-012D1	1.2
AELFL205D1	1.5
AELFL205-013D1	1.5
AELFL205-014D1	1.5
AELFL205-015D1	1.5
AELFL205-100D1	1.5
AELFL206D1	2.1
AELFL206-101D1	2.1
AELFL206-102D1	2.1
AELFL206-103D1	2.1
AELFL206-104D1	2.1
AELFL207D1	2.8
AELFL207-104D1	2.8
AELFL207-105D1	2.8
AELFL207-106D1	2.8
AELFL207-107D1	2.8
AELFL208D1	3.6
AELFL208-108D1	3.6
AELFL208-109D1	3.6
AELFL209D1	4.3
AELFL209-110D1	4.5
AELFL209-111D1	4.3
AELFL209-112D1	4.3
AELFL210D1	4.8
AELFL210-113D1	4.8
AELFL210-114D1	4.8
AELFL210-115D1	4.8

JELFL2 SERIES

JELFL204D1	1.2
JELFL204-012D1	1.2
JELFL205D1	1.5
JELFL205-013D1	1.5
JELFL205-014D1	1.5
JELFL205-015D1	1.5
JELFL205-100D1	1.5
JELFL206D1	2.1
JELFL206-101D1	2.1
JELFL206-102D1	2.1
JELFL206-103D1	2.1
JELFL206-104D1	2.1
JELFL207D1	2.8
JELFL207-104D1	2.8
JELFL207-105D1	2.8
JELFL207-106D1	2.8
JELFL207-107D1	2.8

Continued next page …

BEARING WEIGHTS

Bearing Series → UCFL2 SERIES

UCFL201D1..... 1.3

Complete Flanged Unit Number

Weight (lbs)

FLANGED UNITS — LBS.

JELFL208D1....3.6
JELFL208-108D1....3.6
JELFL208-109D1....3.6
JELFL209D1....4.3
JELFL209-110D1....4.5
JELFL209-111D1....4.3
JELFL209-112D1....4.3
JELFL210D1....4.8
JELFL210-113D1....4.8
JELFL210-114D1....4.8
JELFL210-115D1....4.8
JELFL210D1....5.1
JELFL210-113D1....5.1
JELFL210-114D1....5.1
JELFL210-115D1....5.1
JELFL210-200D1....5.1
JELFL211D1....7.3
JELFL211-200D1....7.3
JELFL211-201D1....7.3
JELFL211-202D1....7.3
JELFL211-203D1....7.3
JELFL212D1....9.5
JELFL212-204D1....9.5
JELFL212-206D1....9.5

ASFD2 SERIES

ASFD201....0.7
ASFD201-008....0.7
ASFD202....0.7
ASFD202-009....0.7
ASFD202-010....0.7
ASFD203....0.7
ASFD203-011....0.7
ASFD204....0.9
ASFD204-012....0.9
ASFD205....1.1
ASFD205-013....1.1
ASFD205-014....1.1
ASFD205-015....1.1
ASFD205-100....1.1
ASFD206D1....1.8
ASFD206-101....1.8
ASFD206-102....1.8
ASFD206-103....1.8
ASFD206-104....1.8
ASFD207....2.0
ASFD207-104....2.0
ASFD207-105....2.0
ASFD207-106....2.0
ASFD207-107....2.0

AELFD2 SERIES

AELFD201....0.7
AELFD201-008....0.7
AELFD202....0.7
AELFD202-009....0.7
AELFD202-010....0.7
AELFD203....0.7
AELFD203-011....0.7
AELFD204....1.1
AELFD204-012....1.1
AELFD205....1.1
AELFD205-013....1.1
AELFD205-014....1.1
AELFD205-015....1.1
AELFD205-100....1.1
AELFD206....1.8
AELFD206-101....1.8
AELFD206-102....1.8
AELFD206-103....1.8
AELFD206-104....1.8
AELFD207....2.2
AELFD207-104....2.2
AELFD207-105....2.2
AELFD207-106....2.2
AELFD207-107....2.2

JELFD2 SERIES

JELFD201....0.7
JELFD201-008....0.7
JELFD202....0.7
JELFD202-009....0.7
JELFD202-010....0.7
JELFD203....0.7
JELFD203-011....0.7
JELFD204....1.1
JELFD204-012....1.1
JELFD205....1.1
JELFD205-013....1.1
JELFD205-014....1.1
JELFD205-015....1.1
JELFD205-100....1.1
JELFD206....1.8
JELFD206-101....1.8
JELFD206-102....1.8
JELFD206-103....1.8
JELFD206-104....1.8
JELFD207....2.2
JELFD207-104....2.2
JELFD207-105....2.2
JELFD207-106....2.2
JELFD207-107....2.2

ASPFL2 Series

ASPFL201....0.2
ASPFL201-008....0.2
ASPFL202....0.2
ASPFL202-009....0.2
ASPFL202-010....0.2
ASPFL203....0.2
ASPFL203-011....0.2
ASPFL204....0.4
ASPFL204-012....0.4
ASPFL205....0.7
ASPFL205-013....0.7
ASPFL205-014....0.7
ASPFL205-015....0.7
ASPFL205-100....0.7
ASPFL206....0.9
ASPFL206-101....0.9
ASPFL206-102....0.9
ASPFL206-103....0.9
ASPFL206-104....0.9
ASPFL207....1.1
ASPFL207-104....1.1
ASPFL207-105....1.1
ASPFL207-106....1.1
ASPFL207-107....1.1

AELPFL2 SERIES

AELPFL201....0.4
AELPFL201-008....0.4
AELPFL202....0.4
AELPFL202-009....0.4
AELPFL202-010....0.4
AELPFL203....0.4
AELPFL203-011....0.4
AELPFL204....0.7
AELPFL204-012....0.7
AELPFL205....0.7
AELPFL205-013....0.7
AELPFL205-014....0.7
AELPFL205-015....0.7
AELPFL205-100....0.7
AELPFL206....1.1
AELPFL206-101....1.1
AELPFL206-102....1.1
AELPFL206-103....1.1
AELPFL206-104....1.1
AELPFL207....1.5
AELPFL207-104....1.5
AELPFL207-105....1.5
AELPFL207-106....1.5
AELPFL207-107....1.5

JELPFL2 SERIES

JELPFL201....0.4
JELPFL201-008....0.4
JELPFL202....0.4
JELPFL202-009....0.4
JELPFL202-010....0.4
JELPFL203....0.4
JELPFL203-011....0.4
JELPFL204....0.7
JELPFL204-012....0.7
JELPFL205....0.7
JELPFL205-013....0.7
JELPFL205-014....0.7
JELPFL205-015....0.7
JELPFL205-100....0.7
JELPFL206....1.1
JELPFL206-101....1.1
JELPFL206-102....1.1
JELPFL206-103....1.1
JELPFL206-104....1.1
JELPFL207....1.5
JELPFL207-104....1.5
JELPFL207-105....1.5
JELPFL207-106....1.5
JELPFL207-107....1.5

ASPF2 SERIES

ASPF201....0.4
ASPF201-008....0.4
ASPF202....0.4
ASPF202-009....0.4
ASPF202-010....0.4
ASPF203....0.4
ASPF203-011....0.4
ASPF204....0.7
ASPF204-012....0.7
ASPF205....0.7
ASPF205-013....0.7
ASPF205-014....0.7
ASPF205-015....0.7
ASPF205-100....0.7
ASPF206....1.1
ASPF206-101....1.1
ASPF206-102....1.1
ASPF206-103....1.1
ASPF206-104....1.1
ASPF207....1.5
ASPF207-104....1.5
ASPF207-105....1.5
ASPF207-106....1.5
ASPF207-107....1.5
ASPF208....2.4
ASPF208-108....2.4
ASPF208-109....2.4

AELPF2 SERIES

AELPF201....0.4
AELPF201-008....0.4
AELPF202....0.4
AELPF202-009....0.4
AELPF202-010....0.4
AELPF203....0.4
AELPF203-011....0.4
AELPF204....0.7
AELPF204-012....0.7
AELPF205....0.9
AELPF205-013....0.9
AELPF205-014....0.9
AELPF205-015....0.9
AELPF205-100....0.9
AELPF206....1.3
AELPF206-101....1.3
AELPF206-102....1.3
AELPF206-103....1.3
AELPF206-104....1.3
AELPF207....1.8
AELPF207-104....1.8
AELPF207-105....1.8
AELPF207-106....1.8
AELPF207-107....1.9
AELPF208....2.9
AELPF208-108....2.9
AELPF208-109....2.9

JELPF2 SERIES

JELPF201....0.4
JELPF201-008....0.4
JELPF202....0.4
JELPF202-009....0.4
JELPF202-010....0.4
JELPF203....0.4
JELPF203-011....0.4
JELPF204....0.7
JELPF204-012....0.7
JELPF205....0.9
JELPF205-013....0.9
JELPF205-014....0.9
JELPF205-015....0.9
JELPF205-100....0.9
JELPF206....1.3
JELPF206-101....1.3
JELPF206-102....1.3
JELPF206-103....1.3
JELPF206-104....1.3
JELPF207....1.8
JELPF207-104....1.8
JELPF207-105....1.8
JELPF207-106....1.8
JELPF207-107....1.9
JELPF208....2.9
JELPF208-108....2.9
JELPF208-109....2.9

UCF2 SERIES

UCF201D1....1.5
UCF201-008D1....1.5
UCF202D1....1.5
UCF202-009D1....1.5
UCF202-010D1....1.5
UCF203D1....1.3
UCF203-011D1....1.3
UCF204D1....1.3
UCF204-012D1....1.3
UCF205D1....1.8
UCF205-013D1....1.8
UCF205-014D1....1.8
UCF205-015D1....1.8
UCF205-100D1....1.8
UCF206D1....2.2
UCF206-101D1....2.2
UCF206-102D1....2.2
UCF206-103D1....2.2
UCF206-104D1....2.2
UCF207D1....3.1
UCF207-104D1....3.1
UCF207-105D1....3.1
UCF207-106D1....3.1
UCF207-107D1....3.1
UCF208D1....4.0
UCF208-108D1....4.0
UCF208-109D1....4.0
UCF209D1....4.9
UCF209-110D1....4.9
UCF209-111D1....4.9
UCF209-112D1....4.9
UCF210D1....5.3
UCF210-113D1....5.3
UCF210-114D1....5.3
UCF210-115D1....5.3
UCF210-200D1....5.3
UCF211D1....7.9
UCF211-200D1....7.9
UCF211-201D1....7.9
UCF211-202D1....7.9
UCF211-203D1....7.9
UCF212D1....9.7
UCF212-204D1....9.7
UCF212-206D1....9.7
UCF212-207D1....9.7
UCF213D1....12.0
UCF213-208D1....12.0
UCF214D1....13.0
UCF214-211D1....13.0
UCF214-212D1....13.0
UCF215D1....15.0
UCF215-215D1....15.0
UCF215-300D1....15.0
UCF216D1....18.0
UCF216-302D1....18.0
UCF217D1....21.0
UCF217-304D1....21.0
UCF218D1....24.0
UCF218-308D1....24.0

UCF3 SERIES

UCF305D1....2.4
UCF305-014D1....2.4
UCF305-015D1....2.4
UCF305-100D1....2.4
UCF306D1....3.5
UCF306-102D1....3.5
UCF306-103D1....3.5
UCF307D1....4.4
UCF307-104D1....4.4
UCF307-105D1....4.4
UCF307-106D1....4.4
UCF307-107D1....4.4
UCF308D1....6.0
UCF308-10BD1....6.0
UCF309D1....7.5
UCF309-110D1....7.5
UCF309-111D1....7.5

Bearing Series → UCFL2 SERIES

UCFL201D1..... 1.3

Complete Flanged Unit Number

Weight (lbs)

NTN BEARING WEIGHTS

FLANGED UNITS — LBS.

UCF309-112D1 ..... 7.5
UCF31001 ..... 9.9
UCF310-114D1 ..... 9.9
UCF310-115D1 ..... 9.9
UCF311D1 ..... 12.0
UCF311-200D1 ..... 12.0
UCF311-202D1 ..... 12.0
UCF311-203D1 ..... 12.0
UCF312D1 ..... 14.0
UCF312-204D1 ..... 14.0
UCF312-206D1 ..... 14.0
UCF312-207D1 ..... 14.0
UCF313D1 ..... 17.0
UCF313-208D1 ..... 17.0
UCF314D1 ..... 21.0
UCF314-211D1 ..... 21.0
UCF314-212D1 ..... 21.0
UCF315D1 ..... 26.0
UCF315-215D1 ..... 26.0
UCF315-300D1 ..... 26.0
UCF316D1 ..... 31.0
UCF316-302D1 ..... 31.0
UCF316-303D1 ..... 31.0
UCF317D1 ..... 35.0
UCF317-304D1 ..... 35.0
UCF318D1 ..... 42.0
UCF31B-307D1 ..... 42.0
UCF318-308D1 ..... 42.0
UCF319D1 ..... 49.0
UCF319-312D1 ..... 49.0
UCF320D1 ..... 57.0
UCF320-315D1 ..... 57.0
UCF320-400D1 ..... 57.0
UCF321D1 ..... 60.0
UCF322D1 ..... 84.0
UCF324D1 ..... 110.0
UCF326D1 ..... 146.0
UCF328D1 ..... 198.0

UCFX SERIES

UCFX05D1 ..... 2.2
UCFX05-013D1 ..... 2.2
UCFX05-014D1 ..... 2.2
UCFX05-015D1 ..... 2.2
UCFX05-100D1 ..... 2.2
UCFX06D1 ..... 3.7
UCFX06-101D1 ..... 3.7
UCFX06-102D1 ..... 3.7
UCFX06-103D1 ..... 3.7
UCFX06-104D1 ..... 3.7
UCFX07D1 ..... 4.6
UCFX07-105D1 ..... 4.6
UCFX07-106D1 ..... 4.6
UCFX07-107D1 ..... 4.6
UCFX0BD1 ..... 5.3
UCFX08-10BD1 ..... 5.3
UCFX08-109D1 ..... 5.3
UCFX09D1 ..... 5.5
UCFX09-110D1 ..... 5.5
UCFX09-111D1 ..... 5.5
UCFX09-112D1 ..... 5.5
UCFX09-113D1 ..... 5.5
UCFX10D1 ..... 8.6
UCFX10-114D1 ..... 8.6
UCFX10-115D1 ..... 8.6
UCFXI0-200D1 ..... 6.6
UCFX11D1 ..... 11.0
UCFX11-201D1 ..... 11.0
UCFX11-202D1 ..... 11.0
UCFX11-203D1 ..... 11.0
UCFX11-204D1 ..... 11.0
UCFX11-205D1 ..... 11.0
UCFX12D1 ..... 11.0
UCFX12-206D1 ..... 11.0
UCFX12-207D1 ..... 11.0
UCFX13D1 ..... 12.0
UCFX13-208D1 ..... 12.0
UCFX13-209D1 ..... 12.0
UCFX14D1 ..... 16.0
UCFX14-210D1 ..... 16.0
UCFX14-211D1 ..... 16.0
UCFX14-212D1 ..... 16.0
UCFX15D1 ..... 18.0
UCFX15-213D1 ..... 18.0
UCFX15-214D1 ..... 18.0
UCFX15-215D1 ..... 18.0
UCFX15-300D1 ..... 18.0
UCFX16D1 ..... 22.0
UCFX16-302D1 ..... 22.0
UCFX16-303D1 ..... 22.0
UCFX16-304D1 ..... 22.0
UCFX17D1 ..... 24.0
UCFX17-305D1 ..... 24.0
UCFX17-307D1 ..... 24.0
UCFX18D1 ..... 24.0
UCFX18-308D1 ..... 24.0
UCFX20D1 ..... 37.0
UCFX20-314D1 ..... 37.0
UCFX20-315D1 ..... 37.0
UCFX20-400D1 ..... 37.0

UELF2 SERIES

UELF204D1 ..... 1.5
UELF204-012D1 ..... 1.5
UELF205D1 ..... 1.8
UELF205-013D1 ..... 1.8
UELF205-014D1 ..... 1.8
UELF205-015D1 ..... 1.8
UELF205-100D1 ..... 1.8
UELF206D1 ..... 2.6
UELF206-101D1 ..... 2.6
UELF206-102D1 ..... 2.6
UELF206-103D1 ..... 2.6
UELF206-104D1 ..... 2.6
UELF207D1 ..... 3.5
UELF207-104D1 ..... 3.5
UELF207-105D1 ..... 3.5
UELF207-106D1 ..... 3.5
UELF207-107D1 ..... 3.5
UELF208D1 ..... 4.2
UELF206-108D1 ..... 4.2
UELF208-109D1 ..... 4.2
UELF209D1 ..... 5.1
UELF209-110D1 ..... 5.1
UELF209-111D1 ..... 5.1
UELF209-112D1 ..... 5.1
UELF210D1 ..... 5.7
UELF210-113D1 ..... 5.7
UELF210-114D1 ..... 5.7
UELF210-115D1 ..... 5.7
UELF210-200D1 ..... 5.7
UELF211D1 ..... 8.4
UELF211-200D1 ..... 8.4
UELF211-201D1 ..... 8.4
UELF211-202D1 ..... 8.4
UELF211-203D1 ..... 8.4
UELF212D1 ..... 11.0
UELF212-204D1 ..... 11.0
UELF212-206D1 ..... 11.0
UELF212-207D1 ..... 11.0
UELF213D1 ..... 13.0
UELF213-208D1 ..... 13.0
UELF214D1 ..... 14.0
UELF214-211D1 ..... 14.0
UELF214-212D1 ..... 14.0
UELF215D1 ..... 16.0
UELF215-215D1 ..... 16.0
UELF215-300D1 ..... 16.0

UELF3 SERIES

UELF305D1 ..... 2.6
UELF305-D14D1 ..... 2.6
UELF305-015D1 ..... 2.6
UELF305-100D1 ..... 2.6
UELF306D1 ..... 3.7
UELF306-102D1 ..... 3.7
UELF306-103D1 ..... 3.7
UELF307D1 ..... 4.4
UELF307-104D1 ..... 4.4
UELF307-105D1 ..... 4.4
UELF307-106D1 ..... 4.4
UELF307-107D1 ..... 4.4
UELF308D1 ..... 6.2
UELF308-106D1 ..... 6.2
UELF309D1 ..... 7.9
UELF309-110D1 ..... 7.9
UELF309-111D1 ..... 7.9
UELF309-112D1 ..... 7.9
UELF310D1 ..... 10.0
UELF310-114D1 ..... 10.0
UELF310-115D1 ..... 10.0
UELF311D1 ..... 13.0
UELF311-200D1 ..... 13.0
UELF311-202D1 ..... 13.0
UELF311-203D1 ..... 13.0
UELF312D1 ..... 15.0
UELF312-204D1 ..... 15.0
UELF312-206D1 ..... 15.0
UELF312-207D1 ..... 15.0
UELF313D1 ..... 18.0
UELF313-208D1 ..... 18.0
UELF314D1 ..... 22.0
UELF314-211D1 ..... 22.0
UELF314-212D1 ..... 22.0
UELF315D1 ..... 26.0
UELF315-215D1 ..... 26.0
UELF315-300D1 ..... 26.0
UELF316D1 ..... 35.0
UELF316-302D1 ..... 35.0
UELF316-303D1 ..... 35.0
UELF317D1 ..... 37.0
UELF317-304D1 ..... 37.0
UELF318D1 ..... 46.0
UELF318-307D1 ..... 46.0
UELF318-308D1 ..... 46.0
UELF319D1 ..... 51.0
UELF319-312D1 ..... 51.0
UELF320D1 ..... 62.0
UELF320-315D1 ..... 62.0
UELF320-400D1 ..... 62.0
UELF321D1 ..... 64.0
UELF322D1 ..... 88.0

UELFU2 SERIES

UELFU204D1 ..... 1.8
UELFU204-012D1 ..... 1.8
UELFU205D1 ..... 2.0
UELFU205-013D1 ..... 2.0
UELFU205-01401 ..... 2.0
UELFU205-01501 ..... 2.0
UELFU205-100D1 ..... 2.0
UELFU206D1 ..... 2.9
UELFU206-101D1 ..... 2.9
UELFU206-102D1 ..... 2.9
UELFU206-104D1 ..... 2.9
UELFU207D1 ..... 4.0
UELFU207-104D1 ..... 4.0
UELFU207-105D1 ..... 4.0
UELFU207-106D1 ..... 4.0
UELFU207-107D1 ..... 4.0
UELFU208D1 ..... 4.6
UELFU208-108D1 ..... 4.6
UELFU208-109D1 ..... 4.6
UELFU209D1 ..... 5.5
UELFU209-110D1 ..... 5.5
UELFU209-111D1 ..... 5.5
UELFU209-112D1 ..... 5.5
UELFU210D1 ..... 6.4
UELFU210-113D1 ..... 6.4
UELFU210-11401 ..... 6.4
UELFU210-115D1 ..... 6.4
UELFU210-200D1 ..... 6.4
UELFU211D1 ..... 9.3
UELFU211-200D1 ..... 9.3
UELFU211-20101 ..... 9.3
UELFU211-202D1 ..... 9.3
UELFU211-203D1 ..... 9.3
UELFU212D1 ..... 11.0
UELFU212-204D1 ..... 11.0
UELFU212-206D1 ..... 11.0
UELFU212-207D1 ..... 11.0
UELFU213D1 ..... 13.0
UELFU213-208D1 ..... 13.0
UELFU214D1 ..... 13.0
UELFU214-211D1 ..... 13.0
UELFU214-212D1 ..... 13.0
UELFU215D1 ..... 17.0
UELFU215-215D1 ..... 17.0
UELFU215-300D1 ..... 17.0

UKF2SERIES

UKF205;H2305X 1.8
UKF205;HE2305 ..... 1.8
UKF206;H2306X 2.4
UKF206;HS2306 ..... 2.4
UKF206;HE2306X 2.4
UKF207;H2307X 3.3
UKF207;HS2307 ..... 3.3
UKF208;H2308X 4.2
UKF208;HE2308X 4.2
UKF208;HS2308X 4.2
UKF209;H2309X 5.1
UKF209;HA2309 ..... 5.1
UKF209;HE2309X 5.1
UKF209;HS2309X 5.1
UKF210;H2310X 5.7
UKF210;HS2310 ..... 5.7
UKF210;HA2310 ..... 5.7
UKF210;HE2310X 5.7
UKF211;H2311X 8.4
UKF211;HS2311 ..... 8.4
UKF211;HA2311 ..... 8.4
UKF211;HE2311XY 8.4
UKF212;H2313X 9.9
UKF212;HS2312 ..... 9.9
UKF213;H2313X 12
UKF213;HA2313 12
UKF213;HE2313 12
UKF213;HS2313 12
UKF215;H2315X 16
UKF215;HA2315 16
UKF215;HE2315 16
UKF216;H2316X 19
UKF216;HA2316 19
UKF216;HE2316 19
UKF217;H2317 22
UKF217;HA2317 22
UKF217;HE2317 22
UKF218;H2318X 26
UKF218;HA2318 26

Continued next page …

NTN

SERIES UC2

Units: Millimeters
INCHES

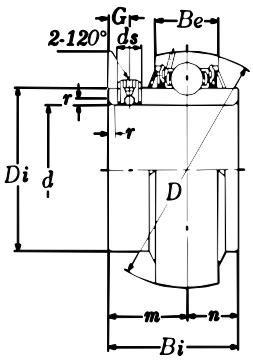

BALL BEARING INSERTS

Bore d	Bearing Number	Nominal Dimensions D	Bi	Be	r	n	m	G	Di	Socket Set Screw ds	Basic Load Ratings (lbs) Dynamic C	Static C_0
12	UC201D1	47	31	18	1	12.7	18.3	4.5	29.6	M5 X 0.8	2,890	1,500
½	UC201-008D1	1.8504	1.220	.709	.039	.500	.720	.177	1.165	10-32UNF		
15	UC202D1	47	31	18	1	12.7	18.3	4.5	29.6	M5 X 0.8	2,890	1,500
9/16	UC202-009D1	1.8504	1.220	.709	.039	.500	.720	.177	1.165	10-32UNF		
⅝	UC202-010D1											
17	UC203D1	47	31	18	1	12.7	18.3	4.5	29.6	M5 X 0.8	2,890	1,500
11/16	UC203-011D1	1.8504	1.220	.709	.039	.500	.720	.177	1.165	10-32UNF		
20	UC204D1	47	31	18	1.5	12.7	18.3	4.5	29.6	M5 X 0.8	2,890	1,500
¾	UC204-012D1	1.8504	1.220	.709	.059	.500	.720	.177	1.165	10-32UNF		
25	UC205D1	52	34	18	1.5	14.3	19.7	5	33.9	M5 X 0.8	3,150	1,760
13/16	UC205-013D1	2.0472	1.339	.709	.059	.563	.776	.197	1.335	10-32UNF		
⅞	UC205-014D1											
15/16	UC205-015D1											
1	UC205-100D1											
30	UC206D1	62	38.1	20	1.5	15.9	22.2	5	40.8	M6 X 0.75	4,400	2,540
1 1/16	UC206-101D1	2.4409	1.500	.787	.059	.626	.874	.197	1.606	¼-28UNF		
1 ⅛	UC206-102D1											
1 3/16	UC206-103D1											
1 ¼	* UC206-104D1											
35	UC207D1	72	42.9	22	2	17.5	25.4	6	46.8	M6 X 0.75	5,750	3,440
1 ¼	UC207-104D1	2.8346	1.689	.866	.079	.689	1.000	.236	1.843	¼-28UNF		
1 5/16	UC207-105D1											
1 ⅜	UC207-106D1											
1 7/16	* UC207-107D1											
40	UC208D1	80	49.2	24	2	19	30.2	8	53	M8 X 1	6,550	4,000
1 ½	UC208-108D1	3.1496	1.937	.945	.079	.748	1.189	.315	2.087	5/16-24UNF		
1 9/16	UC208-109D1											
45	UC209D1	85	49.2	24	2	19	30.2	8	57.5	M8 X 1	7,350	4,590
1 ⅝	UC209-110D1	3.3465	1.937	.945	.079	.748	1.189	.315	2.264	5/16-24UNF		
1 11/16	UC209-111D1											
1 ¾	UC209-112D1											
50	UC210D1	90	51.6	25	2	19	32.6	9	62.4	M8 X 1	7,900	5,220
1 13/16	UC210-113D1	3.5433	2.031	.984	.079	.748	1.283	.354	2.457	5/16-24UNF		
1 ⅞	UC210-114D1											
1 15/16	UC210-115D1											
2	UC210-200D1											
55	UC211D1	100	55.6	27	2.5	22.2	33.4	9	69	M8 X 1	9,750	6,560
2	UC211-200D1	3.9370	2.189	1.063	.098	.874	1.315	.354	2.717	5/16-24UNF		
2 1/16	UC211-201D1											
2 ⅛	UC211-202D1											
2 3/16	UC211-203D1											
60	UC212D1	110	65.1	30	2.5	25.4	39.7	10	77	M10 X 1.25	11,800	8,100
2 ¼	UC212-204D1	4.3307	2.563	1.181	.098	1.000	1.563	3.94	3.031	⅜-24UNF		
2 ⅜	UC212-206D1											
2 7/16	* UC212-207D1											
65	UC213D1	120	65.1	32	2.5	25.4	39.7	10	82.5	M10 X 1.25	12,900	9,000
2 ½	UC213-208D1	4.7244	2.563	1.260	.098	1.000	1.563	.394	3.248	⅜-24UNF		
70	UC214D1	125	74.6	33	2.5	30.2	44.4	12	87	M10 X 1.25	14,000	9,900
2 11/16	UC214-211D1	4.9213	2.937	1.299	.098	1.189	1.748	.472	3.425	⅜-24UNF		
2 ¾	UC214-212D1											
75	UC215D1	130	77.8	34	2.5	33.3	44.5	12	93	M10 X 1.25	14,900	11,100
2 15/16	UC215-215D1	5.1181	3.063	1.339	.098	1.311	1.752	.472	3.661	⅜-24UNF		
3	UC215-300D1											
80	UC216D1	140	82.6	35	3	33.3	49.3	12	98.1	M10 X 1.25	16,300	11,900
3 ⅛	UC216-302D1	5.5118	3.252	1.378	.118	1.311	1.941	.472	3.862	⅜-24UNF		
85	UC217D1	150	85.7	36	3	34.1	51.6	12	106.1	M12 X 1.5	18,700	14,400
3 ¼	UC217-304D1	5.9055	3.374	1.417	.118	1.343	2.031	.472	4.177	½-20UNF		
90	UC218D1	160	96	37	3	39.7	56.3	12	111.6	M12 X 1.5	21,600	16,100
3 ½	UC218-308D1	6.2992	3.780	1.457	.118	1.563	2.217	.472	4.394	½-20UNF		

"A-" at front of part number to denote Ultraclass insert.

BALL BEARING INSERTS

Units: Millimeters
INCHES

SERIES UC3

SET SCREW TYPE

Bore *d*	Bearing Number	Nominal Dimensions *D*	*Bi*	*Be*	*r*	*n*	*m*	*G*	*Di*	Socket Set Screw *ds*	Basic Load Ratings (lbs) *Dynamic C*	*Static C_0*
25	UC305D1	62	38	20	2	15	23	6	36.8	M6 X 0.75	4,750	2,460
7/8	UC305-014D1	2.4409	1.496	.787	.079	.591	.906	.236	1.449	1/4-28UNF		
15/16	UC305-015D1											
1	UC305-100D1											
30	UC306D1	72	43	23	2	17	26	6	44.9	M6 X 0.75	6,000	3,400
1 1/8	UC306-102D1	2.8346	1.693	.906	.079	.669	1.024	.236	1.768	1/4-28UNF		
1 3/16	UC306-103D1											
35	UC307D1	80	48	25	2.5	19	29	8	49.4	M8 X 1	7,500	4,300
1 1/4	UC307-104D1	3.1496	1.890	.984	.098	.748	1.142	.315	1.945	5/16-24UNF		
1 5/16	UC307-105D1											
1 3/8	UC307-106D1											
1 7/16	UC307-107D1											
40	UC308D1	90	52	27	2.5	19	33	10	56	M10 X 1.25	9,150	5,400
1 1/2	UC308-108D1	3.5433	2.047	1.063	.098	.748	1.299	.394	2.205	3/8-24UNF		
45	UC309D1	100	57	29	2.5	22	35	10	63.5	M10 X 1.25	11,900	7,200
1 5/8	UC309-110D1	3.9370	2.244	1.142	.098	.866	1.378	.394	2.500	3/8-24UNF		
1 11/16	UC309-111D1											
1 3/4	UC309-112D1											
50	UC310D1	110	61	32	3	22	39	12	70.6	M12 X 1.5	13,900	8,660
1 7/8	UC310-114D1	4.3307	2.402	1.260	.118	.866	1.535	.472	2.780	1/2-20UNF		
1 15/16	UC310-115D1											
55	UC311D1	120	66	34	3	25	41	12	76.6	M12 X 1.5	16,100	10,100
2	UC311-200D1	4.7244	2.598	1.339	.118	.984	1.614	.472	3.016	1/2-20UNF		
2 1/8	UC311-202D1											
2 3/16	UC311-203D1											
60	UC312D1	130	71	36	3.5	26	45	12	82.7	M12 X 1.5	18,400	11,700
2 1/4	UC312-204D1	5.1181	2.795	1.417	.138	1.024	1.772	.472	3.256	1/2-20UNF		
2 3/8	UC312-206D1											
2 7/16	UC312-207D1											
65	UC313D1	140	75	39	3.5	30	45	12	88.2	M12 X 1.5	20,800	13,400
2 1/2	UC313-208D1	5.5118	2.953	1.535	.138	1.181	1.772	.472	3.472	1/2-20UNF		
70	UC314D1	150	78	41	3.5	33	45	12	94.8	M12 X 1.5	23,400	15,300
2 11/16	UC314-211D1	5.9055	3.071	1.614	.138	1.299	1.772	.472	3.732	1/2-20UNF		
2 3/4	UC314-212D1											
75	UC315D1	160	82	43	3.5	32	50	14	101.3	M14 X 1.5	25,500	17,400
2 15/16	UC315-215D1	6.2992	3.228	1.693	.138	1.260	1.969	.551	3.988	9/16-18UNF		
3	UC315-300D1											
80	UC316D1	170	86	45	3.5	34	52	14	107.9	M14 X 1.5	27,600	19,500
3 1/8	UC316-302D1	6.6929	3.386	1.772	.138	1.339	2.047	.551	4.248	9/16-18UNF		
3 3/16	UC316-303D1											
85	UC317D1	180	96	47	4	40	56	16	114.4	M16 X 1.5	29,800	21,800
3 1/4	UC317-304D1	7.0866	3.780	1.850	.157	1.575	2.205	.630	4.504	5/8-18UNF		
90	UC318D1	190	96	49	4	40	56	16	120.9	M16 X 1.5	32,000	24,100
3 7/16	UC318-307D1	7.4803	3.780	1.929	.157	1.575	2.205	.630	4.760	5/8-18UNF		
3 1/2	UC318-308D1											
95	UC319D1	200	103	51	4	41	62	16	127.5	M16 X 1.5	34,500	26,600
3 3/4	UC319-312D1	7.8740	4.055	2.008	.157	1.614	2.441	.630	5.020	5/8-18UNF		
100	UC320D1	215	108	55	4	42	66	18	135.6	M18 X 1.5	39,000	31,500
3 15/16	UC320-315D1	8.4646	4.252	2.165	.157	1.654	2.598	.709	5.339	5/8-18UNF		
4	UC320-400D1											
105	UC321D1	225	112	57	4	44	68	18	142.1	M18 X 1.5	41,400	34,500
110	UC322D1	240	117	59	4	46	71	18	151.7	M18 X 1.5	46,100	40,500
120	UC324D1	260	126	63	4	51	75	18	165.2	M18 X 1.5	46,600	41,500
130	UC326D1	280	135	67	5	54	81	20	178.3	M20 X 1.5	51,500	48,000
140	UC328D1	300	145	71	5	59	86	20	190.4	M20 X 1.5	56,900	55,500

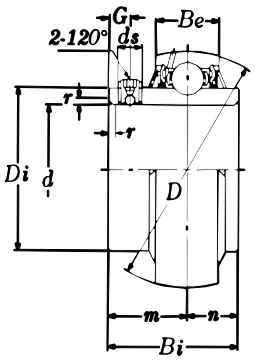

"A-" at front of part number to denote Ultraclass insert.

SERIES UCX

SET SCREW TYPE

Units: Millimeters
INCHES

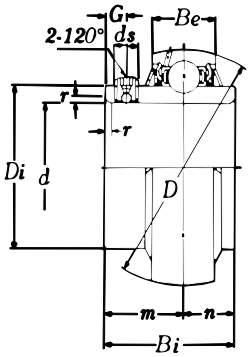

BALL BEARING INSERTS

Bore d	Bearing Number	Nominal Dimensions D	Bi	Be	r	n	m	G	Di	Socket Set Screw ds	Basic Load Ratings (lbs) Dynamic C	Static C_0
25	UCX05D1	62	38.1	20	1.5	15.9	22.2	5	40.8	M6 X 0.75	4,400	2,540
13/16	UCX25-013D1	2.4409	1.500	.787	.059	.626	.874	.197	1.606	1/4-28UNF		
7/8	UCX05-014D1											
15/16	UCX05-015D1											
1	UCX05-100D1											
30	UCX06D1	72	42.9	22	1.5	17.5	25.4	6	46.8	M8 X 1	5,750	3,440
1 1/16	UCX06-101D1	2.8346	1.689	.866	.059	.689	1.000	.236	1.843	5/16-24UNF		
1 1/8	UCX06-102D1											
1 3/16	UCX06-102D1											
35	UCX07D1	80	49.2	24	2	19	30.2	8	53	M8 X 1	6,550	4,000
1 5/16	UCX07-105D1	3.1496	1.937	.945	.079	.748	1.189	.315	2.087	5/16-24UNF		
1 3/8	UCX07-106D1											
1 7/16	UCX07-107D1											
40	UCX08D1	85	49.2	24	2	19	30.2	8	57.5	M8 X 1	7,350	4,590
1 1/2	UCX08-108D1	3.3465	1.937	.945	.079	.748	1.189	.315	2.264	5/16-24UNF		
1 9/16	UCX08-109D1											
45	UCX09D1	90	51.6	25	2	19	32.6	9	62.4	M10 X 1.25	7,900	5,220
1 5/8	UCX09-110D1	3.5433	2.031	.984	.079	.748	1.283	.354	2.457	3/8-24UNF		
1 11/16	UCX09-111D1											
1 3/4	UCX09-112D1											
50	UCX10D1	100	55.6	27	2	22.2	33.4	9	69	M10 X 1.25	9,750	6,560
1 7/8	UCX10-114D1	3.9370	2.189	1.063	.079	.874	1.315	.354	2.717	3/8-24UNF		
1 15/16	UCX10-115D1											
55	UCX11D1	110	65.1	30	2.5	25.4	39.7	10	77	M10 X 1.25	11,800	8,100
2 1/16	UCX11-201D1	4.3307	2.563	1.181	.098	1.000	1.563	.394	3.031	3/8-24UNF		
2 1/8	UCX11-202D1											
2 3/16	UCX11-203D1											
60	UCX12D1	120	65.1	32	2.5	25.4	39.7	10	82.5	M10 X 1.25	12,900	9,000
2 3/8	UCX12-206D1	4.7244	2.563	1.260	.098	1.000	1.563	.394	3.248	3/8-24UNF		
2 7/16	UCX12-207D1											
65	UCX13D1	125	74.6	33	2.5	30.2	44.4	12	87	M12 X 1.5	14,000	9,900
2 1/2	UCX13-208D1	4.9213	2.937	1.299	.098	1.189	1.748	.472	3.425	1/2-20UNF		
2 9/16	UCX13-209D1											
70	UCX14D1	130	77.8	34	2.5	33.3	44.5	12	93	M12 X 1.5	14,900	11,100
2 5/8	UCX14-210D1	5.1181	3.063	1.339	.098	1.311	1.752	.472	3.661	1/2-20UNF		
2 11/16	UCX14-211D1											
2 3/4	UCX14-212D1											
75	UCX15D1	140	82.6	35	2.5	33.3	49.3	12	98.1	M12 X 1.5	16,300	11,900
2 13/16	UCX15-213D1	5.5118	3.252	1.378	.098	1.311	1.941	.472	3.862	1/2-20UNF		
2 7/8	UCX15-214D1											
2 15/16	UCX15-215D1											
3	UCX15-300D1											
80	UCX16D1	150	85.7	36	3	34.1	51.6	12	106.1	M12 X 1.5	18,700	14,400
3 1/8	UCX16-302D1	5.9055	3.374	1.417	.118	1.343	2.031	.472	4.177	1/2-20UNF		
3 3/16	UCX16-303D1											
85	UCX17D1	160	96	37	3	39.7	56.3	12	111.6	M12 X 1.5	21,600	16,100
3 5/16	UCX17-305D1	6.2992	3.780	1.457	.118	1.563	2.217	.472	4.394	1/2-20UNF		
3 7/16	UCX17-307D1											
90	UCX18D1	170	104	39	3	42.9	61.1	14	118.2	M14 X 1.5	24,500	18,400
3 1/2	UCX18-308D1	6.6929	4.094	1.535	.118	1.689	2.406	.551	4.654	9/16-18UNF		
100	UCX20D1	190	117.5	44	3.5	49.2	68.3	16	131.3	M16 X 1.5	29,900	23,600
3 7/8	UCX20-314D1	7.4803	4.626	1.732	.138	1.937	2.689	.630	5.169	5/8-18UNF		
3 15/16	UCX20-315D1											
4	UCX20-400D1											

"A-" at front of part number to denote Ultraclass insert.

Units: Millimeters
INCHES

SERIES AS2 ASS2

SET SCREW TYPE

BALL BEARING INSERTS – AS2 SERIES

Bore	Bearing Number	Nominal Dimensions								Socket Set Screw	Basic Load Ratings (lbs)	
d		*D*	*Bi*	*Be*	*r*	*n*	*m*	*G*	*Di*	*ds*	*Dynamic C*	*Static C_0*
12	AS201	40	22	12	1	6	16	4.2	24.4	M5 X 0.8	2,160	1,030
½	AS201-008	1.5748	.866	.472	.039	.236	.630	.165	.961	10-32UNF		
15	AS202	40	22	12	1	6	16	4.2	24.4	M5 X 0.8	2,160	1,030
9/16	AS202-009	1.5748	.866	.472	.039	.236	.630	.165	.961	10-32UNF		
⅝	AS202-010											
17	AS203	40	22	12	1	6	16	4.2	24.4	M5 X 0.8	2,160	1,030
11/16	* AS203-011	1.5748	.866	.472	.039	.236	.630	.165	.961	10-32UNF		
20	AS204	47	25	14	1.5	7	18	4.2	29.6	M5 X 0.8	2,890	1,500
¾	AS204-012	1.8504	.984	.551	.059	.276	.708	.165	1.165	10-32UNF		
25	AS205	52	27	15	1.5	7.5	19.5	5	33.9	M5 X 0.8	3,150	1,760
13/16	AS205-013	2.0472	1.063	.591	.059	.295	.768	.197	1.335	10-32UNF		
⅞	AS205-014											
15/16	AS205-015											
1	AS205-100											
30	AS206	62	29	16	1.5	8	21	5	40.8	M6 X 0.75	4,400	2,540
1 1/16	AS206-101	2.4409	1.142	.630	.059	.315	.827	.197	1.606	¼-28UNF		
1 ⅛	AS206-102											
1 3/16	AS206-103											
1 ¼	* AS206-104											
35	AS207	72	34	17	2	8.5	25.5	6	46.8	M6 X 0.75	5,750	3,440
1 ¼	AS207-104	2.8349	1.339	.669	.079	.335	1.004	.236	1.843	¼-28UNF		
1 5/16	AS207-105											
1 ⅜	AS207-106											
1 7/16	* AS207-107											
40	AS208	80	38	18	2	9	29	8	53	M8 X 1	6,540	4,000
1 ½	AS208-108	3.1496	1.496	.709	.079	.354	1.142	.315	2.087	5/16 -24UNF		
1 9/16	AS208-109											

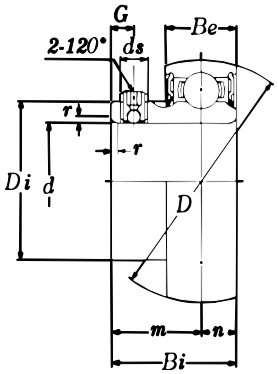

AS2

BALL BEARING INSERTS – ASS2 SERIES

Bore	Bearing Number	Nominal Dimensions											Socket Set Screw	Basic Load Ratings (lbs)	
d		*D*	*Bi*	*Be*	*r*	*n*	*m*	*G*	*Di*	*Dn*	*an*	*bn*	*ds*	*Dynamic C*	*Static C_0*
12	ASS201N	40	22	12	1	6	16	4.2	24.4	38.1	1.98	1.5	M5 X 0.8	2,160	1,030
½	ASS201-008N	1.5748	.866	.472	.039	.236	.630	.165	.961	1.500	.078	.059	10-32UNF		
15	ASS202N	40	22	12	1	6	16	4.2	24.4	38.1	1.98	1.5	M5 X 0.8	2,160	1,030
9/16	ASS202-009N	1.5748	.866	.472	.039	.236	.630	.165	.961	1.500	.078	.059	10-32UNF		
⅝	ASS202-010N														
17	ASS203N	40	22	12	1	6	16	4.2	24.4	38.1	1.98	1.5	M5 X 0.8	2,160	1,030
11/16	* ASS203-011N	1.5748	.866	.472	.039	.236	.630	.165	.961	1.500	.078	.059	10-32UNF		
20	ASS204N	47	25	14	1.5	7	18	4.2	29.6	44.6	2.38	1.5	M5 X 0.8	2,890	1,500
¾	ASS204-012N	1.8504	.984	.551	.059	.276	.708	.165	1.165	1.756	.094	.059	10-32UNF		
25	ASS205N	52	27	15	1.5	7.5	19.5	5	33.9	49.73	2.38	1.5	M5 X 0.8	3,150	1,760
13/16	ASS205-013N	2.0472	1.063	.591	.059	.295	.768	.197	1.335	1.958	.094	.059	10-32UNF		
⅞	ASS205-014N														
15/16	ASS205-015N														
1	ASS205-100N														
30	ASS206N	62	29	16	1.5	8	21	5	40.8	59.61	3.18	2.05	M6 X 0.75	4,400	2,540
1 1/16	ASS206-101N	2.4409	1.142	.630	.059	.315	.827	.197	1.606	2.347	.125	.081	¼-28UNF		
1 ⅛	ASS206-102N														
1 3/16	ASS206-103N														
1 ¼	* ASS206-104N														
35	ASS207N	72	34	17	2	8.5	25.5	6	46.8	68.81	3.18	2.05	M6 X 0.75	5,750	3,440
1 ¼	ASS207-104N	2.8349	1.339	.669	.079	.335	1.004	.236	1.843	2.709	.125	.081	¼-28UNF		
1 5/16	ASS207-105N														
1 ⅜	ASS207-106N														
1 7/16	* ASS207-107N														
40	ASS208N	80	38	18	2	9	29	8	53	76.81	3.18	2.05	M8 X 1	6,540	4,000
1 ½	ASS208-108N	3.1496	1.496	.709	.079	.354	1.142	.315	2.087	3.024	.125	.081	5/16-24UNF		
1 9/16	ASS208-109N														

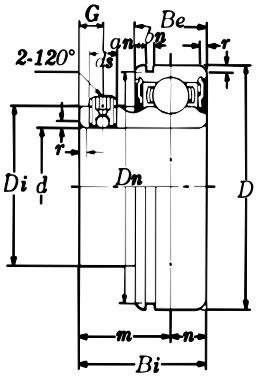

ASS2

SERIES AR2

SET SCREW TYPE

Units: Millimeters
INCHES

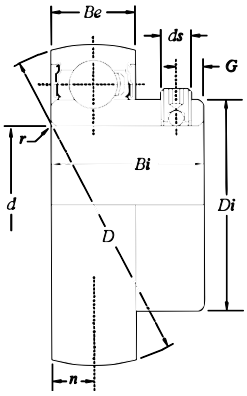

BALL BEARING INSERTS

Bore *d*	Bearing Number	Nominal Dimensions *D*	*Bi*	*Be*	*r*	*n*	*G*	*Di*	Socket Set Screw *ds*	Basic Load Ratings (lbs) *Dynamic C*	*Static* C_0
12 ½	AR201 AR201-008	40 1.5748	22.5 .8858	13 .5118	1 .0394	6.5 .2559	5 .1969	24.4 .9606	M6 X 0.75 ¼-28UNF	1,370	615
15 9/16 ⅝	AR202 AR202-009 AR202-010	40 1.5748	22.5 .8858	13 .5118	1 .0394	6.5 .2559	5 .1969	24.4 .9606	M6 X 0.75 ¼-28UNF	1,740	805
17 11/16	AR203 AR203-011	40 1.5748	22.5 .8858	13 .5118	1 .0394	6.5 .2559	5 .1969	24.4 .9606	M6 X 0.75 ¼-28UNF	2,160	1,030
20 ¾	AR204 AR204-012	47 1.8504	25.5 1.0039	15 .5906	1.5 .0591	7.5 .2953	5 .1969	29.6 1.1654	M6 X 0.75 ¼-28UNF	2,890	1,500
25 13/16 ⅞ 15/16 1	AR205 AR205-013 AR205-014 AR205-015 AR205-100	52 2.0472	27 1.0630	15 .5906	1.5 .0591	7.5 .2953	5 .1969	33.9 1.3346	M6 X 0.75 ¼-28UNF	3,150	1,770
30 1 1/16 1 ⅛ 1 3/16 1 ¼	AR206 AR206-101 AR206-102 AR206-103 AR206-104	62 2.4409	30 1.1811	18 .7087	1.5 .0591	9 .3543	5 .1969	40.8 1.6063	M6 X 0.75 ¼-28UNF	4,400	2,540
35 1 ¼ 1 5/16 1 ⅜ 1 7/16	AR207 AR207-104 AR207-105 AR207-106 AR207-107	72 2.8346	35 1.3780	19 .7480	2 .0787	9.5 .3740	6 .2362	46.8 1.8425	M6 X 0.75 ¼-28UNF	5,750	3,450
40 1 ½ 1 9/16	AR208 AR208-108 AR208-109	80 3.1496	40 1.5748	22 .8661	2 .0787	11 .4331	8 .3150	53 2.0866	M8 X 1 5/16-24UNF	6,550	4,000
45 1 ⅝ 1 11/16 1 ¾	AR209 AR209-110 AR209-111 AR209-112	85 3.3465	41.5 1.6339	22 .8661	2 .0787	11 .4331	8 .3150	57.5 2.2638	M8 X 1 5/16-24UNF	7,350	4,600
50 1 13/16 1 ⅞ 1 15/16 2	AR210 AR210-113 AR210-114 AR210-115 AR210-200	90 3.5433	43 1.6929	22 .8661	2 .0787	11 .4331	9 .3543	62.4 2.4567	M8 X 1 5/16 -24UNF	7,900	5,200

BALL BEARING INSERTS

Units: Millimeters
INCHES

SERIES UCS2

SET SCREW TYPE

Bore *d*	Bearing Number	Nominal Dimensions *D*	*Bi*	*Be*	*r*	*n*	*m*	*G*	*Di*	*Dn*	*an*	*bn*	Socket Set Screw *ds*	Basic Load Ratings (lbs) *Dynamic C*	*Static C_0*
12	UCS201D1N	47	31	18	1	12.7	18.3	4.5	29.6	44.6	3.2	1.5	M5 X 0.8	2,890	1,500
1/2	UCS201-008D1N	1.8504	1.220	.079	.039	.500	.720	.177	1.165	1.756	.126	.059	10-32UNF		
15	UCS202D1N	47	31	18	1	12.7	18.3	4.5	29.6	44.6	3.2	1.5	M5 X 0.8	2,890	1,500
9/16	UCS202-009D1N	1.8504	1.220	.709	.039	.500	.720	.177	1.165	1.756	.126	.059	10-32UNF		
5/8	UCS202-010D1N														
17	UCS203D1N	47	31	18	1	12.7	18.3	4.5	29.6	44.6	3.2	1.5	M5 X 0.8	2,890	1,500
11/16	UCS203-011D1N	1.8504	1.220	.709	.039	.500	.720	.177	1.165	1.756	.126	.059	10-32UNF		
20	UCS204D1N	47	31	18	1.5	12.7	18.3	4.5	29.6	44.6	3.2	1.5	M5 X 0.8	2,890	1,500
3/4	UCS204-012D1N	1.8504	1.220	.709	.059	.500	.720	.177	1.165	1.756	.126	.059	10-32UNF		
25	UCS205D1N	52	34	18	1.5	14.3	19.7	5	33.9	49.73	3.2	1.5	M5 X 0.8	3,150	1,760
13/16	UCS205-013D1N	2.0472	1.339	.709	.059	.563	.776	.197	1.335	1.958	.126	.059	10-32UNF		
7/8	UCS205-014D1N														
15/16	UCS205-015D1N														
1	UCS205-100D1N														
30	UCS206D1N	62	38.1	20	1.5	15.9	22.2	5	40.8	59.61	3.5	2.05	M6 X 0.75	4,400	2,540
1 1/16	UCS206-101D1N	2.4409	1.500	.787	.059	.626	.874	.197	1.606	2.347	.138	.081	1/4-28UNF		
1 1/8	UCS206-102D1N														
1 3/16	UCS206-103D1N														
35	UCS207D1N	72	42.9	22	2	17.5	25.4	6	46.8	68.81	3.7	2.05	M6 X 0.75	5,750	3,440
1 1/4	UCS207-104D1N	2.8346	1.689	.866	.079	.689	1.000	.236	1.843	2.709	.146	.081	1/4-28UNF		
1 5/16	UCS207-105D1N														
1 3/8	UCS207-106D1N														
1 7/16	* UCS207-107D1N														
40	UCS208D1N	80	49.2	24	2	19	30.2	8	53	76.81	3.7	2.05	M8 X 1	6,550	4,000
1 1/2	UCS208-108D1N	3.1496	1.937	.945	.079	.748	1.189	.315	2.087	3.024	.146	.081	5/16-24UNF		
1 9/16	UCS208-109D1N														
45	UCS209D1N	85	49.2	24	2	19	30.2	8	57.5	81.81	3.7	2.05	M8 X 1	7,350	4,590
1 5/8	UCS209-110D1N	3.3465	1.937	.945	.079	.748	1.189	.315	2.264	3.221	.146	.081	5/16-24UNF		
1 11/16	UCS209-111D1N														
1 3/4	UCS209-112D1N														
50	UCS210D1N	90	51.6	25	2	19	32.6	9	62.4	86.79	4	2.85	M8 X 1	7,900	5,220
1 13/16	UCS210-113D1N	3.5433	2.031	.984	.079	.748	1.283	.354	2.457	3.417	.157	.112	5/16-24UNF		
1 7/8	UCS210-114D1N														
1 15/16	UCS210-115D1N														
55	UCS211D1N	100	55.6	27	2.5	22.2	33.4	9	69	96.8	4.5	2.85	M8 X 1	9,750	6,560
2	UCS211-200D1N	3.9370	2.189	1.063	.098	.874	1.315	.354	2.717	3.811	.177	.112	5/16-24UNF		
2 1/16	UCS211-201D1N														
2 1/8	UCS211-202D1N														
2 3/16	UCS211-203D1N														
60	UCS212D1	110	65.1	30	2.5	25.4	39.7	10	77	—	—	—	M10 X 1.25	11,800	8,100
2 1/4	UCS212-204D1	4.3307	2.563	1.181	.098	1.000	1.563	.394	3.031	—	—	—	3/8-24UNF		
2 3/8	UCS212-206D1														
2 7/16	* UCS212-207D1														
65	UCS213D1	120	65.1	32	2.5	25.4	39.7	10	82.5	—	—	—	M10 X 1.25	12,900	9,000
2 1/2	UCS213-208D1	4.7244	2.563	1.260	.098	1.000	1.563	.394	3.248	—	—	—	3/8 -24UNF		
70	UCS214D1	125	74.6	33	2.5	30.2	44.4	12	87	—	—	—	M10 X 1.25	14,000	9,900
75	UCS215D1	130	77.8	34	2.5	33.3	44.5	12	93	—	—	—	M10 X 1.25	14,900	11,100
80	UCS216D1	140	82.6	35	3	33.3	49.3	12	98.1	—	—	—	M10 X 1.25	16,300	11,900
85	UCS217D1	150	85.7	36	3	34.1	51.6	12	106.1	—	—	—	M12 X 1.5	18,700	14,300
90	UCS218D1	160	96	37	3	39.7	56.3	12	111.6	—	—	—	M12 X 1.5	21,600	16,100

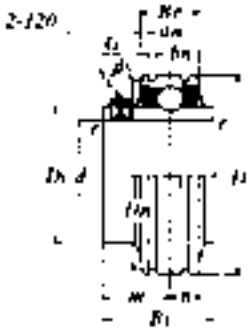

UCS•••D1N

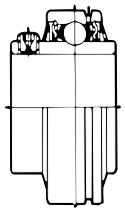

UCS•••D1

SERIES UCS3

SET SCREW TYPE

Units: Millimeters
INCHES

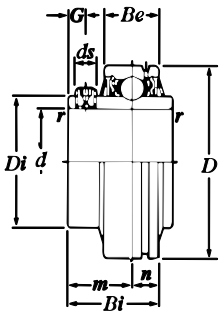

BALL BEARING INSERTS

Bore d	Bearing Number	Nominal Dimensions D	Bi	Be	r	n	m	G	Di	Socket Set Screw ds	Basic Load Ratings (lbs) Dynamic C	Static C_0
25	UCS305D1	62	38	20	2	15	23	6	36.8	M6 X 0.75	4,770	2,450
7/8	UCS305-014D1	2.4409	1.496	.787	.079	.591	.906	.236	1.449	1/4-28UNF		
15/16	UCS305-015D1											
1	UCS305-100D1											
30	UCS306D1	72	43	23	2	17	26	6	44.9	M6 X 0.75	6,000	3,370
1 1/8	UCS306-102D1	2.8346	1.693	.906	.079	.669	1.024	.236	1.768	1/4-28UNF		
1 3/16	UCS306-103D1											
35	UCS307D1	80	48	25	2.5	19	29	8	49.4	M8 X 1	7,530	4,290
1 1/4	UCS307-104D1	3.1496	1.890	.984	.098	.748	1.142	.315	1.945	5/16-24UNF		
1 5/16	UCS307-105D1											
1 3/8	UCS307-106D1											
1 7/16	UCS307-107D1											
40	UCS308D1	90	52	27	2.5	19	33	10	56	M10 X 1.25	9,100	5,400
1 1/2	UCS308-108D1	3.5433	2.047	1.063	.098	.748	1.299	.394	2.205	3/8-24UNF		
45	UCS309D1	100	57	29	2.5	22	35	10	63.5	M10 X 1.25	11,900	7,200
1 5/8	UCS309-110D1	3.9370	2.244	1.142	.098	.866	1.378	.394	2.500	3/8-24UNF		
1 11/16	UCS309-111D1											
1 3/4	UCS309-112D1											
50	UCS310D1	110	61	32	3	22	39	12	70.6	M12 X 1.5	13,900	8,660
1 7/8	UCS310-114D1	4.3307	2.402	1.260	.118	.866	1.535	.472	2.780	1/2-20UNF		
1 15/16	UCS310-115D1											
55	UCS311D1	120	66	34	3	25	41	12	76.6	M12 X 1.5	16,100	10,100
2	UCS311-200D1	4.7244	2.598	1.339	.118	.984	1.614	.472	3.016	1/2-20UNF		
2 1/8	UCS311-202D1											
2 3/16	UCS311-203D1											
60	UCS312D1	130	71	36	3.5	26	45	12	82.7	M12 X 1.5	18,400	11,700
2 1/4	UCS312-204D1	5.1181	2.795	1.417	.138	1.024	1.772	.472	3.256	1/2-20UNF		
2 3/8	UCS312-206D1											
2 7/16	UCS312-207D1											
65	UCS313D1	140	75	39	3.5	30	45	12	88.2	M12 X 1.5	20,800	13,500
2 1/2	UCS313-208D1	5.5118	2.953	1.535	.138	1.181	1.772	.472	3.472	1/2-20UNF		
70	UCS314D1	150	78	41	3.5	33	45	12	94.8	M12 X 1.5	23,400	15,300
2 11/16	UCS314-211D1	5.9055	3.071	1.614	.138	1.299	1.772	.472	3.732	1/2-20UNF		
2 3/4	UCS314-212D1											
75	UCS315D1	160	82	43	3.5	32	50	14	101.3	M14 X 1.5	25,400	17,300
2 15/16	UCS315-215D1	6.2992	3.228	1.693	.138	1.260	1.969	.551	3.988	9/16-18UNF		
3	UCS315-300D1											
80	UCS316D1	170	86	45	3.5	34	52	14	107.9	M14 X 1.5	27,700	19,400
3 1/8	UCS316-302D1	6.6929	3.386	1.772	.138	1.339	2.047	.551	4.248	9/16-18UNF		
3 3/16	UCS316-303D1											
85	UCS317D1	180	96	47	4	40	56	16	114.4	M16 X 1.5	29,900	21,800
3 1/4	UCS317-304D1	7.0866	3.780	1.850	.157	1.575	2.205	.630	4.504	5/8-18UNF		
90	UCS318D1	190	96	49	4	40	56	16	120.9	M16 X 1.5	32,100	24,100
3 7/16	UCS318-307D1	7.4803	3.780	1.929	.157	1.575	2.205	.630	4.760	5/8-18UNF		
3 1/2	UCS318-308D1											
95	UCS319D1	200	103	51	4	41	62	16	127.5	M16 X 1.5	34,400	26,800
3 3/4	UCS319-312D1	7.8740	4.055	2.008	.157	1.614	2.441	.630	5.020	5/8-18UNF		
100	UCS320D1	215	108	55	4	42	66	18	135.6	M18 X 1.5	38,900	31,700
3 15/16	UCS320-315D1	8.4646	4.252	2.165	.157	1.654	2.598	.709	5.339	5/8-18UNF		
4	UCS320-400D1											
105	UCS321D1	225	112	57	4	44	68	18	142.1	M18 X 1.5	41,400	34,400
110	UCS322D1	240	117	59	4	46	71	18	151.7	M18 X 1.5	46,100	40,200
120	UCS324D1	260	126	63	4	51	75	18	165.2	M18 X 1.5	46,500	41,600
130	UCS326D1	280	135	67	5	54	81	20	178.3	M20 X 1.5	51,500	48,100
140	UCS328D1	300	145	71	5	59	86	20	190.4	M20 X 1.5	56,900	55,300

BALL BEARING INSERTS

Units: Millimeters
INCHES

SERIES UEL2

ECCENTRIC LOCKING COLLAR TYPE

Bore d	Bearing Number	Nominal Dimensions D	L	Bi	Be	r	n	m	G	Di	Socket Set Screw ds	Basic Load Ratings (lbs) Dynamic C	Static C_0
20	UEL204D1	47	43.7	34.2	18	1.5	17.1	26.6	4.8	33	M6 X 0.75	2,890	1,500
¾	UEL204-012D1	1.8504	1.720	1.346	.709	.059	.672	1.047	.189	1.31	¼-28UNF		
25	UEL205D1	52	44.4	34.9	18	1.5	17.5	26.9	4.8	38	M6 X 0.75	3,150	1,760
13/16	UEL205-013D1	2.0472	1.748	1.374	.709	.059	.688	1.059	.189	1.50	¼-28UNF		
⅞	UEL205-014D1												
15/16	UEL205-015D1												
1	UEL205-100D1												
30	UEL206D1	62	48.4	36.5	20	1.5	18.3	30.1	6	44.5	M8 X 1	4,400	2,540
1 1/16	UEL206-101D1	2.4409	1.906	1.437	.787	.059	.719	1.185	.236	1.75	5/16-24UNF		
1 ⅛	UEL206-102D1												
1 3/16	UEL206-103D1												
1 ¼	UEL206-104D1												
35	UEL207D1	72	51.1	37.6	22	2	18.8	32.3	6.8	55.5	M10 X 1.25	5,750	3,440
1 ¼	UEL207-104D1	2.8346	2.012	1.480	.866	.079	.742	1.272	.268	2.19	⅜-24UNF		
1 5/16	UEL207-105D1												
1 ⅜	UEL207-106D1												
1 7/16	UEL207-107D1												
40	UEL208D1	80	56.3	42.8	24	2	21.4	34.9	6.8	60	M10 X 1.25	6,550	4,000
1 ½	UEL208-108D1	3.1496	2.217	1.685	.945	.079	.844	1.374	.268	2.37	⅜-24UNF		
1 9/16	UEL208-109D1												
45	UEL209D1	85	56.3	42.8	24	2	21.4	34.9	6.8	63.5	M10 X 1.25	7,350	4,590
1 ⅝	UEL209-110D1	3.3465	2.217	1.685	.945	.079	.844	1.374	.268	2.50	⅜-24UNF		
1 11/16	UEL209-111D1												
1 ¾	UEL209-112D1												
50	UEL210D1	90	62.7	49.2	25	2	24.6	38.1	6.8	69.5	M10 X 1.25	7,900	5,220
1 13/16	UEL210-113D1	3.5433	2.469	1.937	.984	.079	.969	1.500	.268	2.74	⅜-24UNF		
1 ⅞	UEL210-114D1												
1 15/16	UEL210-115D1												
2	UEL210-200D1												
55	UEL211D1	100	71.4	55.5	27	2.5	27.8	43.6	8	76	M10 X 1.25	9,750	6,560
2	UEL211-200D1	3.9370	2.811	2.185	1.063	.098	1.094	1.717	.315	3.00	⅜-24UNF		
2 1/16	UEL211-201D1												
2 ⅛	UEL211-202D1												
2 3/16	UEL211-203D1												
60	UEL212D1	110	77.8	61.9	30	2.5	31	46.8	8	84	M10 X 1.25	11,800	8,100
2 ¼	UEL212-204D1	4.3307	3.063	2.437	1.181	.098	1.219	1.843	.315	3.31	⅜-24UNF		
2 ⅜	UEL212-206D1												
2 7/16	UEL212-207D1												
65	UEL213D1	120	85.7	68.3	32	2.5	34.15	51.55	8.7	97	M10 X 1.25	12,900	9,000
2 ½	UEL213-208D1	4.7244	3.374	2.689	1.260	.098	1.344	2.030	.343	3.819	⅜-24UNF		
70	UEL214D1	125	85.7	68.3	33	2.5	34.15	51.55	8.7	97	M10 X 1.25	13,900	9,900
2 11/16	UEL214-211D1	4.9213	3.374	2.689	1.299	.098	1.344	2.030	.343	3.819	⅜-24UNF		
2 ¾	UEL214-212D1												
75	UEL215D1	130	92	74.6	34	2.5	37.3	54.7	8.7	102	M10 X 1.25	14,800	11,100
2 15/16	UEL215-215D1	5.1181	3.622	2.937	1.339	.098	1.469	2.154	.343	4.016	⅜-24UNF		
3	UEL215-300D1												

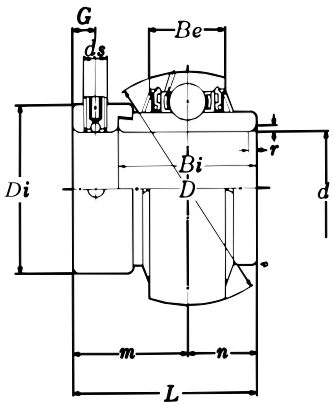

"A-" at front of part number to denote Ultraclass insert.

NTN

SERIES UEL3

ECCENTRIC LOCKING COLLAR TYPE

Units: Millimeters
INCHES

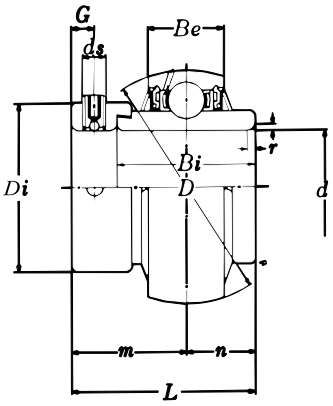

BALL BEARING INSERTS

Bore d	Bearing Number	Nominal Dimensions D	L	Bi	Be	r	n	m	G	Di	Socket Set Screw ds	Basic Load Ratings (lbs) Dynamic C	Static C_0
25 ⅞ 15/16 1	UEL305D1 UEL305-014D1 UEL305-015D1 UEL305-100D1	62 2.4409	46.8 1.843	34.9 1.374	20 .787	2 .079	16.7 .657	30.1 1.185	6 .236	42.8 1.685	M8 X 1 5/16-24UNF	4,770	2,450
30 1 ⅛ 1 3/16	UEL306D1 UEL306-102D1 UEL306-103D1	72 2.8346	50 1.969	36.5 1.437	23 .906	2 .079	17.5 .689	32.5 1.280	6.7 .264	50 1.969	M8 X 1 5/16-24UNF	6,000	3,370
35 1 ¼ 1 5/16 1 ⅜ 1 7/16	UEL307D1 UEL307-104D1 UEL307-105D1 UEL307-106D1 UEL307-107D1	80 3.1496	51.6 2.031	38.1 1.500	25 .984	2.5 .098	18.3 .720	33.3 1.311	6.7 .264	55 2.165	M8 X 1 5/16-24UNF	7,530	4,290
40 1 ½	UEL308D1 UEL308-108D1	90 3.5433	57.1 2.248	41.3 1.626	27 1.063	2.5 .098	19.8 .780	37.3 1.469	8 .315	63.5 2.500	M10 X 1.25 ⅜-24UNF	9,100	5,400
45 1 ⅝ 1 11/16 1 ¾	UEL309D1 UEL309-110D1 UEL309-111D1 UEL309-112D1	100 3.9370	58.7 2.311	42.9 1.689	29 1.142	2.5 .098	19.8 .780	38.9 1.531	8 .315	70 2.756	M10 X 1.25 ⅜-24UNF	11,900	7,200
50 1 ⅞ 1 15/16	UEL310D1 UEL310-114D1 UEL310-115D1	110 4.3307	66.6 2.622	49.2 1.937	32 1.260	3 .118	24.6 .969	42 1.654	8.7 .343	76.2 3.000	M10 X 1.25 ⅜-24UNF	13,900	8,660
55 2 2 ⅛ 2 3/16	UEL311D1 UEL311-200D1 UEL311-202D1 UEL311-203D1	120 4.7244	73 2.874	55.6 2.189	34 1.339	3 .118	27.8 1.094	45.2 1.780	8.7 .343	83 3.268	M10 X 1.25 ⅜-24UNF	16,100	10,100
60 2 ¼ 2 ⅜ 2 7/16	UEL312D1 UEL312-204D1 UEL312-206D1 UEL312-207D1	130 5.1181	79.4 3.126	61.9 2.437	36 1.417	3.5 .138	30.95 1.219	48.45 1.907	8.7 .343	89 3.504	M10 X 1.25 ⅜-24UNF	18,400	11,700
65 2 ½	UEL313D1 UEL313-208D1	140 5.5118	85.7 3.374	65.1 2.563	39 1.535	3.5 .138	32.55 1.281	53.15 2.093	10.3 .406	97 3.819	M12 X 1.5 ½-20UNF	20,800	13,500
70 2 11/16 2 ¾	UEL314D1 UEL314-211D1 UEL314-212D1	150 5.9055	92.1 3.626	68.3 2.689	41 1.614	3.5 .138	34.15 1.344	57.95 2.281	10.3 .406	102 4.016	M12 X 1.5 ½-20UNF	23,400	15,300
75 2 15/16 3	UEL315D1 UEL315-215D1 UEL315-300D1	160 6.2992	100 3.937	74.6 2.937	43 1.693	3.5 .138	37.3 1.469	62.7 2.469	12.7 .500	113 4.449	M16 X 1.5 ⅝-18UNF	25,400	17,300
80 3 ⅛ 3 3/16	UEL316D1 UEL316-302D1 UEL316-303D1	170 6.6929	106.4 4.189	81 3.189	45 1.772	3.5 .138	40.5 1.594	65.9 2.594	12.7 .500	119 4.685	M16 X 1.5 ⅝-18UNF	27,700	19,400
85 3 ¼	UEL317D1 UEL317-304D1	180 7.0866	109.5 4.311	84.1 3.311	47 1.850	4 .157	42.05 1.656	67.45 2.656	12.7 .500	127 5.000	M16 X 1.5 ⅝-18UNF	29,900	21,800
90 3 7/16 3 ½	UEL318D1 UEL318-307D1 UEL318-308D1	190 7.4803	115.9 4.563	87.3 3.437	49 1.929	4 .157	43.65 1.719	72.25 2.844	14.3 .563	133 5.236	M20 X 1.5 ¾-16UNF	32,100	24,100
95 3 ¾	UEL319D1 UEL319-312D1	200 7.8740	122.3 4.815	93.7 3.689	51 2.008	4 .157	38.9 1.531	83.4 3.283	14.3 .563	140 5.512	M20 X 1.5 ¾-16UNF	34,400	26,800
100 3 15/16 4	UEL320D1 UEL320-315D1 UEL320-400D1	215 8.4646	128.6 5.063	100 3.937	55 2.165	4 .157	50 1.969	78.6 3.094	14.3 .563	146 5.748	M20 X 1.5 ¾-16UNF	38,900	31,700
105	UEL321D1	225	139.7	104.8	57	4	48.4	91.3	17.5	157	M20 X 1.5	41,400	34,400
110	UEL322D1	240	141.3	106.4	59	4	49.2	92.1	17.5	168	M20 X 1.5	46,100	40,200

"A-" at front of part number to denote Ultraclass insert.

Units: Millimeters
INCHES

SERIES AEL2 AELS2

ECCENTRIC LOCKING COLLAR TYPE

BALL BEARING INSERTS – AEL2 SERIES

Bore	Bearing Number	Nominal Dimensions									Socket Set Screw	Basic Load Ratings (lbs)	
d		*D*	*L*	*Bi*	*Be*	*r*	*n*	*m*	*G*	*Di*	*ds*	*Dynamic C*	*Static C_0*
12	AEL201	40	28.6	19	12	0.6	6.5	22.1	4.8	29	M6 X 0.75	2,160	1,030
½	AEL201-008	1.5748	1.126	.748	.472	.024	.256	.870	.189	1.14	¼-28UNF		
15	AEL202	40	28.6	19	12	0.6	6.5	22.1	4.8	29	M6 X 0.75	2,160	1,030
9/16	AEL202-009	1.5748	1.126	.748	.472	.024	.256	.870	.189	1.14	¼-28UNF		
⅝	AEL202-010												
17	AEL203	40	28.6	19	12	0.6	6.5	22.1	4.8	29	M6 X 0.75	2,160	1,030
11/16	AEL203-011	1.5748	1.126	.748	.472	.024	.256	.870	.189	1.14	¼-28UNF		
20	AEL204	47	31	21.5	14	1	7.5	23.5	4.8	33	M6 X 0.75	2,890	1,500
¾	AEL204-012	1.8504	1.219	.846	.551	.039	.295	.924	.189	1.31	¼-28UNF		
25	AEL205	52	31	21.5	15	1	7.5	23.5	4.8	38	M6 X 0.75	3,150	1,760
13/16	AEL205-013	2.0472	1.219	.846	.591	.039	.295	.924	.189	1.50	¼-28UNF		
⅞	AEL205-014												
15/16	AEL205-015												
1	AEL205-100												
30	AEL206	62	35.7	23.8	16	1	9	26.7	6	44.5	M8 X 1	4,400	2,540
1 1/16	AEL206-101	2.4409	1.406	.937	.630	.039	.354	1.052	.236	1.75	5/16-24UNF		
1 ⅛	AEL206-102												
1 3/16	AEL206-103												
1 ¼	AEL206-104												
35	AEL207	72	38.9	25.4	17	1.5	9.5	29.4	6.8	55.5	M10 X 1.25	5,750	3,440
1 ¼	AEL207-104	2.8346	1.531	1.000	.669	.059	.374	1.157	.268	2.19	⅜-24UNF		
1 5/16	AEL207-105												
1 ⅜	AEL207-106												
1 7/16	AEL207-107												
40	AEL208	80	43.7	30.2	18	1.5	11	32.7	6.8	60	M10 X 1.25	6,550	4,000
1 ½	AEL208-108	3.1496	1.719	1.189	.709	.059	.433	1.286	.268	2.37	⅜-24UNF		
1 9/16	AEL208-109												
45	AEL209	85	43.7	30.2	19	1.5	11	32.7	6.8	63.5	M10 X 1.25	7,350	4,600
1 ⅝	AEL209-110	3.4640	1.720	1.189	.748	.059	.433	1.287	.268	2.50	⅜-24UNF		
1 11/16	AEL209-111												
50	AEL210W3	90	43.7	30.2	20	1.5	11	32.7	6.8	69.5	M10 X 1.25	7,900	5,200
1 13/16	AEL210-113	3.5433	1.720	1.189	.787	.059	.433	1.287	.268	2.736	⅜-24UNF		
1 ⅞	AEL210-114												
1 15/16	AEL210-115												
2	AEL210-200												
55	AEL211	100	48.4	32.5	21	2	12	36.4	8	76	M10 X 1.25	9,750	6,550
2	AEL211-200	3.937	1.906	1.280	.827	.079	.472	1.433	.315	2.992	⅜-24UNF		

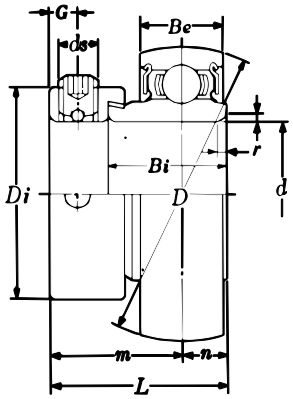

AEL2

BALL BEARING INSERTS – AELS2 SERIES

Bore	Bearing Number	Nominal Dimensions													Socket Set Screw	Basic Load Ratings (lbs)	
d		*D*	*L*	*Bi*	*Be*	*r*	*n*	*m*	*G*	*Di*	*Dn*	*an*	*bn*		*ds*	*Dynamic C*	*Static C_0*
12	AELS201N	40	28.6	19	12	0.6	6.5	22.1	4.8	29	38.1	1.98	1.5		M6 X 0.75	2,160	1,030
½	AELS201-008N	1.5748	1.126	.748	.472	.024	.256	.870	.189	1.14	1.500	.078	.059		¼-28UNF		
15	AELS202N	40	28.6	19	12	0.6	6.5	22.1	4.8	29	38.1	1.98	1.5		M6 X 0.75	2,160	1,030
9/16	AELS202-009N	1.5748	1.126	.748	.472	.024	.256	.870	.189	1.14	1.500	.078	.059		¼-28UNF		
⅝	AELS202-010N																
17	AELS203N	40	28.6	19	12	0.6	6.5	22.1	4.8	29	38.1	1.98	1.5		M6 X 0.75	2,160	1,030
11/16	AELS203-011N	1.5748	1.126	.748	.472	.024	.256	.870	.189	1.14	1.500	.078	.059		¼-28UNF		
20	AELS204N	47	31	21.5	14	1	7.5	23.5	4.8	33	44.6	2.38	1.5		M6 X 0.75	2,890	1,500
¾	AELS204-012N	1.8504	1.219	.846	.551	.039	.295	.924	.189	.1.31	1.756	.094	.059		¼-28UNF		
25	AELS205N	52	31	21.5	15	1	7.5	23.5	4.8	38	49.7	2.38	1.5		M6 X 0.75	3,150	1,760
13/16	AELS205-013N	2.0472	1.219	.846	.591	.039	.295	.924	.189	1.50	1.958	.094	.059		¼-28UNF		
⅞	AELS205-014N																
15/16	AELS205-015N																
1	AELS205-100N																
30	AELS206N	62	35.7	23.8	16	1	9	26.7	6	44.5	59.6	3.18	2.05		M8 X 1	4,400	2,540
1 1/16	AELS206-101N	2.4409	1.406	.937	.630	.039	.354	1.052	.236	1.75	2.347	.125	.081		5/16-24UNF		
1 ⅛	AELS206-102N																
1 3/16	AELS206-103N																
1 ¼	AELS206-104N																
35	AELS207N	72	38.9	25.4	17	1.5	9.5	29.4	6.8	55.5	68.8	3.18	2.05		M10 X 1.25	5,750	3,440
1 ¼	AELS207-104N	2.8346	1.531	1.000	.669	.059	.374	1.157	.268	2.19	2.709	.125	.081		⅜-24UNF		
1 5/16	AELS207-105N																
1 ⅜	AELS207-106N																
1 7/16	AELS207-107N																
40	AELS208N	80	43.7	30.2	18	1.5	11	32.7	6.8	60	76.8	3.18	2.05		M10 X 1.25	6,550	4,000
1 ½	AELS208-108N	3.1496	1.719	1.189	.709	.059	.433	1.286	.268	2.37	3.024	.125	.081		⅜-24UNF		
1 9/16	AELS208-109N																
45	AELS209N	85	43.7	30.2	19	1.5	11	32.7	6.8	63.5	81.8	3.18	2.05		M10 X 1.25	7,350	4,600
1 ⅝	AELS209-110N	3.3465	1.720	1.189	.748	.059	.433	1.286	.268	2.50	3.221	.125	.081		⅜-24UNF		
1 11/16	AELS209-111N																
1 ¾	AELS209-112N																
50	AELS210N	90	43.7	30.2	20	2.0	1.5	32.7	6.8	69.5	86.7	3.18	2.85		M10 X 1.25	7,900	5,200
1 13/16	AELS210-113N	3.5433	1.720	1.189	.787	.079	.059	1.286	.268	2.73	3.417	.125	.112		⅜-24UNF		
1 ⅞	AELS210-114N																
1 15/16	AELS210-115N																
2	AELS210-200N																
55	AELS211N	100	48.4	32.5	21	2.3	2.3	36.4	8.0	76.0	96.8	3.18	2.85		M10 X 1.25	9,750	6,550
2	AELS211-200N	3.9370	1.906	1.279	.826	.091	.091	1.433	.315	2.992	3.811	.125	.112		⅜-24UNF		

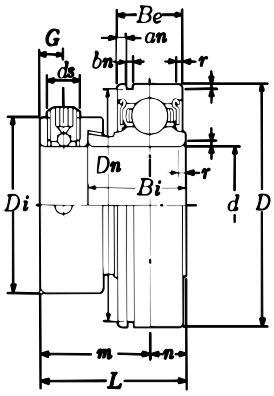

AELS2

SERIES JEL2

ECCENTRIC LOCKING COLLAR TYPE

Units: Millimeters
INCHES

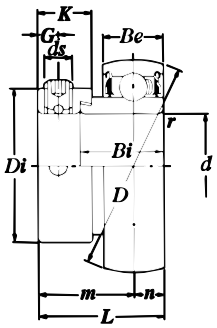

BALL BEARING INSERTS

Bore d	Bearing Number	Nominal Dimensions D	L	Bi	Be	r	n	m	G	Di	Socket Set Screw ds	Basic Load Ratings (lbs) Dynamic C	Static C_0
12	JEL201	40	28.6	19	13	1	6.5	22.1	4.8	29	M6 X 0.75	2,160	1,030
½	JEL201-008	1.5748	1.126	.748	.512	.039	.256	.870	.189	1.142	¼-28UNF		
15	JEL202	40	28.6	19	13	1	6.5	22.1	4.8	29	M6 X 0.75	2,160	1,030
9/16	JEL202-009	1.5748	1.126	.748	.512	.039	.256	.870	.189	1.142	¼-28UNF		
⅝	JEL202-010												
17	JEL203	40	28.6	19	13	1	6.5	22.1	4.8	29	M6 X 0.75	2,160	1,030
11/16	JEL203-011	1.5748	1.126	.748	.512	.039	.256	.870	.189	1.142	¼-28UNF		
20	JEL204	47	31.0	21.5	15	1.5	7.5	23.5	4.8	33	M6 X 0.75	2,890	1,500
¾	JEL204-012	1.8504	1.220	.846	.591	.059	.295	.925	.189	1.299	¼-28UNF		
25	JEL205	52	31.0	21.5	15	1.5	7.5	23.5	4.8	38	M6 X 0.75	3,150	1,770
13/16	JEL205-013	2.0472	1.220	.846	.591	.059	.295	.925	.189	1.496	¼-28UNF		
⅞	JEL205-014												
15/16	JEL205-015												
1	JEL205-100												
30	JEL206	62	35.7	23.8	18	1.5	9	26.7	6	44.5	M8 X 1	4,400	2,540
1 1/16	JEL206-101	2.4409	1.406	.937	.709	.059	.354	1.051	.236	1.752	5/16-24UNF		
1 ⅛	JEL206-102												
1 3/16	JEL206-103												
1 ¼	JEL206-104												
35	JEL207	72	38.9	25.4	19	2	9.5	29.4	6.8	55.5	M10 X 1.25	5,750	3,450
1 ¼	JEL207-104	2.8346	1.531	1.000	.748	.079	.374	1.157	.268	2.185	⅜-24UNF		
1 5/16	JEL207-105												
1 ⅜	JEL207-106												
1 7/16	JEL207-107												
40	JEL208	80	43.7	30.2	22	2	11	32.7	6.8	60	M10 X 1.25	6,550	4,000
1 ½	JEL208-108	3.1496	1.720	1.189	.866	.079	.433	1.287	.268	2.362	⅜-24UNF		
1 9/16	JEL208-109												
45	JEL209	85	43.7	30.2	22	2	11	32.7	6.8	63.5	M10 X 1.25	7,380	4,580
1 1/16	JEL209-110	3.3465	1.720	1.189	.866	.079	.433	1.287	.268	2.50	⅜-24UNF		
1 11/16	JEL209-111												
1 ¾	JEL209-112												
50	JEL210	90	43.7	30.2	22	2	11	32.7	6.8	69.5	M10 X 1.25	7,930	5,220
1 ⅞	JEL210-114	3.5433	1.720	1.189	.866	.079	.433	1.287	.268	2.74	⅜-24UNF		
1 15/16	JEL210-115												
55	JEL211	100	48.4	32.5	24	2.5	12	36.4	8	76	M10 X 1.25	9,810	6,570
2	JEL211-200	3.9370	1.906	1.280	.945	.098	.472	1.433	.315	3.00	⅜-24UNF		
2 3/16	JEL211-203												
60	JEL212	110	53.1	37.2	27	2.5	13.5	39.6	8	84	M10 X 1.25	11,800	8,150
2 ¼	JEL212-204	4.3307	2.091	1.465	1.063	.098	.531	1.559	.315	3.31	⅜-24UNF		

BALL BEARING INSERTS

Units: Millimeters
INCHES

SERIES REL2

ECCENTRIC LOCKING COLLAR TYPE

Bore *d*	Bearing Number	Nominal Dimensions *D*	*L*	*Bi*	*Be*	*r*	*n*	*m*	*G*	*Di*	Socket Set Screw *ds*	Basic Load Ratings (lbs) *Dynamic C*	*Static C_0*
20	REL204	47	43.7	34.2	15	1.5	17.1	26.6	4.8	33	M6 X 0.75	2,890	1,500
¾	REL204-012	1.8504	1.720	1.3465	.591	.059	.673	1.047	.189	1.31	¼-28UNF		
25	REL205	52	44.4	34.9	15	1.5	17.45	26.9	4.8	38	M6 X 0.75	3,150	1,770
13/16	REL205-013	2.0472	1.748	1.3740	.591	.059	.687	1.061	.189	1.50	¼-28UNF		
⅞	REL205-014												
15/16	REL205-015												
1	REL205-100												
30	REL206	62	48.4	36.5	18	1.5	18.25	30.2	6	44.5	M8 X 1	4,400	2,540
1 1/16	REL206-101	2.4409	1.906	1.4370	.709	.059	.719	1.188	.236	1.75	5/16-24UNF		
1 ⅛	REL206-102												
1 3/16	REL206-103												
1 ¼	REL206-104												
35	REL207	72	51.1	37.6	19	2	18.8	32.3	6.8	55.5	M10 X 1.25	5,750	3,450
1 ¼	REL207-104	2.8346	2.012	1.4803	.748	.079	.740	1.272	.268	2.19	⅜-28UNF		
1 5/16	REL207-105												
1 ⅜	REL207-106												
1 7/16	REL207-107												
40	REL208	80	56.3	42.8	22	2	21.4	34.9	6.8	60	M10 X 1.25	6,550	4,000
1 ½	REL208-108	3.1496	2.217	1.6850	.866	.079	.843	1.375	.268	2.37	⅜-28UNF		
1 9/16	REL208-109												
45	REL209	85	56.3	42.8	22	2	21.4	34.9	6.8	63.5	M10 X 1.25	7,350	4,600
1 ⅝	REL209-110	3.3465	2.217	1.6850	.866	.079	.843	1.375	.268	2.50	⅜-28UNF		
1 11/16	REL209-111												
1 ¾	REL209-112												
50	REL210	90	62.7	49.2	22	2	24.6	38.1	6.8	69.5	M10 X 1.25	7,900	5,200
1 13/16	REL210-113	3.5433	2.469	1.9370	.866	.079	.969	1.501	.268	2.74	⅜-28UNF		
1 ⅞	REL210-114												
1 15/16	REL210-115												
2	REL210-200												
55	REL211	100	71.4	55.5	24	2.5	27.75	43.7	8	76	M10 X 1.25	9,750	6,550
2	REL211-200	3.9370	2.811	2.1850	.945	.098	1.093	1.719	.315	3.00	⅜-28UNF		
2 1/16	REL211-201												
2 ⅛	REL211-202												
2 3/16	REL211-203												
60	REL212	110	77.8	61.9	27	2.5	30.95	46.9	8	84	M10 X 1.25	11,800	8,150
2 ¼	REL212-204	4.3307	3.063	2.4370	1.063	.098	1.219	1.845	.315	3.31	⅜-28UNF		
2 5/16	REL212-205												
2 ⅜	REL212-206												
2 7/16	REL212-207												

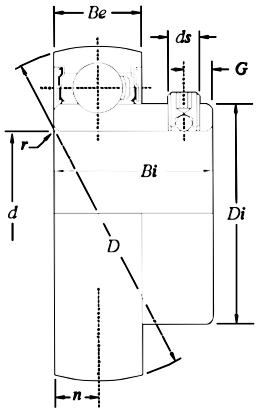

NTN

SERIES UK2

ADAPTER TYPE

Units: Millimeters
INCHES

UK2...D1

UK2...
D1 + H,
HA, HE, HS

BALL BEARING INSERTS

Bore *d1*	Bearing and adapter number	Nominal dimensions *d*	*D*	*Bi*	*Be*	*Di*	*L*	*C*	*D3*	Basic Load Ratings (lbs) Dynamic *C*	Static C_0
20	UK205D1 ; H 2305X	25	52	23	18	33.9	35	8	38	3,150	1,770
¾	UK205D1 ; HE2305	0.9843	2.0472	0.906	0.709	1.335	1.378	0.315	1.496		
25	UK206D1 ; H 2306X	30	62	26	20	40.8	38	8	45	4,400	2,540
⅞	UK206D1 ; HS2306	1.1811	2.4409	1.024	0.787	1.606	1.496	0.315	1.772		
1	UK206D1 ; HE2306X										
30	UK207D1 ; H 2307X	35	72	29	22	46.8	43	9	52	5,750	3,450
1 ⅛	UK207D1 ; HS2307	1.3780	2.8346	1.142	0.866	1.843	1.693	0.354	2.047		
35	UK208D1 ; H 2308X	40	80	31	24	53	46	10	58	6,550	4,000
1 ¼	UK208D1 ; HE2308X	1.5748	3.1496	1.220	0.945	2.087	1.811	0.394	2.283		
1 ⅜	UK208D1 ; HS2308X										
40	UK209D1 ; H 2309X	45	85	31	24	57.5	50	11	65	7,350	4,600
1 7/16	UK209D1 ; HA2309	1.7717	3.3465	1.220	0.945	2.264	1.969	0.433	2.559		
1 ½	UK209D1 ; HE2309X										
1 ⅝	UK209D1 ; HS2309X										
45	UK210D1 ; H 2310X	50	90	32	25	62.4	55	12	70	7,900	5,200
1 ⅝	UK210D1 ; HS2310	1.9685	3.5433	1.260	0.984	2.457	2.165	0.472	2.756		
1 11/16	UK210D1 ; HA2310										
1 ¾	UK210D1 ; HE2310X										
50	UK211D1 ; H 2311X	55	100	35	27	69	59	12	75	9,750	6,550
1 ⅞	UK211D1 ; HS2311	2.1654	3.937	1.378	1.063	2.717	2.323	0.472	2.953		
1 15/16	UK211D1 ; HA2311										
2	UK211D1 ; HE2311XY										
55	UK212D1 ; H 2312X	60	110	38	30	77	62	13	80	11,800	8,150
2 ⅛	UK212D1 ; HS2312X	2.3622	4.3307	1.496	1.181	3.031	2.441	0.512	3.150		
60	UK213D1 ; H 2313X	65	120	40	32	82.5	65	14	85	12,900	9,000
2 3/16	UK213D1 ; HA2313	2.5591	7.7244	1.575	1.260	3.248	2.559	0.551	3.346		
2 ¼	UK213D1 ; HE2313										
2 ⅜	UK213D1 ; HS2313										
65	UK215D1 ; H 2315X	75	130	44	34	93	73	15	98	14,900	11,100
2 7/16	UK215D1 ; HA2315	2.9528	5.1181	1.732	1.339	3.661	2.874	0.591	3.858		
2 ½	UK215D1 ; HE2315										
70	UK216D1 ; H 2316X	80	140	45	35	98.1	78	17	105	16,300	11,900
2 11/16	UK216D1 ; HA2316	3.1496	5.5118	1.772	1.378	3.862	3.071	0.669	4.134		
2 ¾	UK216D1 ; HE2316										
75	UK217D1 ; H 2317X	85	150	150	36	106.1	82	18	110	18,700	14,300
2 15/16	UK217D1 ; HA2317	3.3465	5.9055	5.9055	1.417	4.177	3.228	0.709	4.331		
3	UK217D1 ; HE2317										
80	UK218D1 ; H 2318X	90	160	160	37	111.6	86	18	120	21,600	16,100
3 3/16	UK218D1 ; HA2318	3.5433	6.2992	6.2992	1.457	4.394	3.386	0.709	4.724		

These numbers indicate re-lubricatable type. If maintenance free type is needed, please order without suffix “D1”.

Adapter number with suffix “X” means a narrow slot type adapter sleeve. In this case the lock washer with the straight inner prong should be used.

For HE2311XY, screw thread pitch different from the standard is applied, because of the thin thread section of sleeve. To distinguish it, a suffix “Y” is added.

Bearing Series → **AS2 SERIES**

AS201 ..... .22

Bearing Number → AS201 ← Weight (lbs)

NTN BEARING WEIGHTS

BALL BEARING INSERTS — LBS.

AS2 SERIES

AS201	.22
AS201-008	.22
AS202	.20
AS202-009	.21
AS202-010	.20
AS203	.18
AS203-011	.18
AS204	.29
AS204-012	.29
AS205	.35
AS205-013	.42
AS205-014	.40
AS205-015	.38
AS205-100	.35
AS206	.55
AS206-101	.61
AS206-102	.59
AS206-103	.57
AS206-104	.55
AS207	.82
AS207-104	1.06
AS207-105	.93
AS207-106	.81
AS207-107	.69
AS208	1.10
AS208-108	1.15
AS208-109	1.06

ASS2 SERIES

ASS201N	.26
ASS201-008N	.22
ASS202N	.24
ASS202-009N	.21
ASS202-010N	.20
ASS203N	.22
ASS203-011N	.18
ASS204N	.37
ASS204-012N	.29
ASS205N	.44
ASS205-013N	.42
ASS205-014N	.40
ASS205-015N	.38
ASS205-100N	.35
ASS206N	.68
ASS206-101N	.61
ASS206-102N	.59
ASS206-103N	.57
ASS206-104N	.55
ASS207N	1.08
ASS207-104N	1.06
ASS207-105N	.93
ASS207-106N	.81
ASS207-107N	.69
ASS208N	1.10
ASS208-108N	1.15
ASS208-109N	1.06

AEL2 SERIES

AEL201	.26
AEL201-008	.26
AEL202	.24
AEL202-009	.26
AEL202-010	.24
AEL203	.22
AEL203-011	.23
AEL204	.37
AEL204-012	.35
AEL205	.44
AEL205-013	.51
AEL205-014	.48
AEL205-015	.45
AEL205-100	.42
AEL206	.68
AEL206-101	.74
AEL206-102	.73
AEL206-103	.66
AEL206-104	.61
AEL207	1.08
AEL207-104	1.15
AEL207-105	1.10
AEL207-106	1.04
AEL207-107	.98
AEL208	1.46
AEL208-108	1.41
AEL208-109	1.34

AELS2 SERIES

AELS201N	.26
AELS201-008N	.26
AELS202N	.24
AELS202-009N	.26
AELS202-010N	.24
AELS203N	.22
AELS203-011N	.23
AELS204N	.37
AELS204-012N	.35
AELS205N	.44
AELS205-013N	.51
AELS205-014N	.48
AELS205-015N	.45
AELS205-100N	.42
AELS206N	.68
AELS206-101N	.74
AELS206-102N	.73
AELS206-103N	.66
AELS206-104N	.61
AELS207N	1.08
AELS207-104N	1.15
AELS207-105N	1.10
AELS207-106N	1.04
AELS207-107N	.98
AELS208N	1.46
AELS208-108N	1.41
AELS208-109N	1.34

JEL2 SERIES

JEL201	.26
JEL201-008	.25
JEL202	.22
JEL202-009	.24
JEL202-010	.22
JEL203	.20
JEL203-011	.20
JEL204	.35
JEL204-012	.37
JEL205	.42
JEL205-013	.50
JEL205-014	.47
JEL205-015	.44
JEL205-100	.41
JEL206	.71
JEL206-101	.78
JEL206-102	.73
JEL206-103	.69
JEL206-104	.64
JEL207	1.10
JEL207-104	1.22
JEL207-105	1.16
JEL207-106	1.11
JEL207-107	1.05
JEL208	1.43
JEL208-108	1.53
JEL208-109	1.46
JEL209	1.69
JEL209-110	1.87
JEL209-111	1.79
JEL209-112	1.72
JEL210	1.86
JEL210-114	1.99
JEL210-115	1.91
JEL211	2.51
JEL211-200	2.78
JEL211-203	2.47
JEL212	3.48
JEL212-204	3.70

AR SERIES

AR201	.23
AR201-008	.22
AR202	.21
AR202-009	.21
AR202-010	.20
AR203	.19
AR203-011	.19
AR204	.31
AR204-012	.33
AR205	.35
AR205-013	.42
AR205-014	.40
AR205-015	.38
AR205-100	.33
AR206	.60
AR206-101	.66
AR206-102	.64
AR206-103	.60
AR206-104	.55
AR207	.88
AR207-104	.99
AR207-105	.93
AR207-106	.88
AR207-107	.84
AR208	1.24
AR208-108	1.32
AR208-109	1.26
AR209	1.35
AR209-110	1.52
AR209-111	1.46
AR209-112	1.37
AR210	1.48
AR210-113	1.70
AR210-114	1.61
AR210-115	1.52
AR210-200	1.43

UK2 SERIES

UK205D1: H2305X	.55
UK205D1: HE2305	.57
UK206D1: H2306X	.79
UK206D1: HS2306	.86
UK206D1: HE2306X	.78
UK207D1: H2307X	1.27
UK207D1: HS2307	1.30
UK208D1: H2308X	1.63
UK208D1: HE2308X	1.77
UK208D1: HS2308X	1.63
UK209D1: H2309X	1.83
UK209D1: HA2309	2.01
UK209D1: HE2309X	1.93
UK209D1: HS2309X	1.76
UK210D1: H2310X	2.14
UK210D1: HS2310	2.38
UK210D1: HA2310	2.28
UK210D1: HE2310X	2.18
UK211D1: H2311X	2.78
UK211D1: HS2311	2.96
UK211D1: HA2311	2.84
UK211D1: HE2311XY	2.70
UK212D1: H2312X	3.51
UK212D1: HS2312	3.60
UK213D1: H2313X	4.41
UK213D1: HA2313X	4.86
UK213D1: HE2313	4.70
UK213D1: HS2313	4.38
UK215D1: H2315X	5.64
UK215D1: HA2315	6.04
UK215D1: HE2315	5.84
UK216D1: H2316X	7.12
UK216D1: HA2316	7.38
UK216D1: HE2316	7.14
UK217D1: H2317X	8.66
UK217D1: HA2317	8.73
UK217D1: HE2317	8.46
UK218D1: H2318X	10.45
UK218D1: HA2318	11.00

REL SERIES

REL204	.35
REL204-012	.38
REL205	.40
REL205-013	.49
REL205-014	.46
REL205-015	.42
REL205-100	.38
REL206	.66
REL206-101	.75
REL206-102	.71
REL206-103	.66
REL206-104	.60
REL207	.93
REL207-104	1.04
REL207-105	.99
REL207-106	.93
REL207-107	.88
REL208	1.28
REL208-108	1.37
REL208-109	1.30
REL209	1.37
REL209-110	1.54
REL209-111	1.54
REL209-112	1.39
REL210	1.61
REL210-113	1.85
REL210-114	1.76
REL210-115	1.65
REL210-200	1.57
REL211	2.25
REL211-200	2.58
REL211-201	2.47
REL211-202	2.34
REL211-203	2.21
REL212	3.13
REL212-204	3.42
REL212-205	3.26
REL212-206	3.11
REL212-207	2.93

UC2 SERIES

UC201D1	.46
UC201-008D1	.46
UC202D1	.44
UC202-009D1	.44
UC202-010D1	.42
UC203D1	.40
UC203-011D1	.39
UC204D1	.37
UC204-012D1	.39
UC205D1	.44
UC205-013D1	.53
UC205-014D1	.51
UC205-015D1	.46
UC205-100D1	.44
UC206D1	.73
UC206-101D1	.82
UC206-102D1	.77
UC206-103D1	.73

Continued next page …

NTN BEARING WEIGHTS

Bearing Series → **AS2 SERIES**

AS201 ..... .22

Bearing Number → AS201 ← Weight (lbs)

BALL BEARING INSERTS — LBS.

UC206-104D1	.66
UC207D1	1.08
UC207-104D1	1.21
UC207-105D1	1.15
UC207-106D1	1.08
UC207-107D1	1.01
UC208D1	1.43
UC208-108D1	1.52
UC208-109D1	1.46
UC209D1	1.54
UC209-110D1	1.76
UC209-111D1	1.68
UC209-112D1	1.57
UC210D1	1.76
UC210-113D1	2.03
UC210-114D1	1.92
UC210-115D1	1.81
UC210-200D1	1.69
UC211D1	2.38
UC211-200D1	2.71
UC211-201D1	2.60
UC211-202D1	2.46
UC211-203D1	2.34
UC212D1	3.37
UC212-204D1	3.66
UC212-206D1	3.33
UC212-207D1	3.17
UC213D1	4.08
UC213-208D1	4.26
UC214D1	4.63
UC214-211D1	4.87
UC214-212D1	4.65
UC215D1	5.18
UC215-215D1	5.25
UC215-300D1	4.98
UC216D1	6.17
UC216-302D1	6.28
UC217D1	7.43
UC217-304D1	7.92
UC218D1	9.61
UC218-308D1	9.88

UCX SERIES

UCX05D1	.86
UCX05-013D1	.97
UCX05-014D1	.93
UCX05-015D1	.88
UCX05-100D1	.84
UCX06D1	1.50
UCX06-101D1	1.61
UCX06-102D1	1.54
UCX06-103D1	1.50
UCX07D12	1.81
UCX07-105D1	1.87
UCX07-106D1	1.81
UCX07-107D1	1.74
UCX08D1	2.05
UCX08-108D1	2.16
UCX08-109D1	2.07
UCX09D1	2.21
UCX09-110D1	2.43
UCX09-111D1	2.34
UCX09-112D1	2.25
UCX10D1	2.98
UCX10-114D1	3.15
UCX10-115D1	3.04
UCX11D1	4.19
UCX11-201D1	4.43
UCX11-202D1	4.30
UCX11-203D1	4.12
UCX12D1	5.01
UCX12-206D1	4.96
UCX12-207D1	4.81
UCX13D1	5.40
UCX13-208D1	5.60
UCX13-209D1	5.38
UCX14D1	5.45
UCX14-210D1	5.93
UCX14-211D1	5.69
UCX14-212D1	5.47
UCX15D1	6.86
UCX15-213D1	7.43
UCX15-214D1	7.19
UCX15-215D1	6.92
UCX15-300D1	6.66
UCX16D1	8.36
UCX16-302D1	8.47
UCX16-303D1	8.18
UCX17D1	10.6
UCX17-305D1	10.8
UCX17-307D1	10.1
UCX18D1	12.2
UCX18-308D1	12.4
UCX20D1	19.7
UCX20-314D1	18.4
UCX20-315D1	19.7
UCX20-400D1	19.2

UC3 SERIES

UC305D1	.77
UC305-014D1	.77
UC305-015D1	.77
UC305-100D1	.77
UC306D1	1.23
UC306-102D1	1.23
UC306-103D1	1.23
UC307D1	1.57
UC307-104D1	1.57
UC307-105D1	1.57
UC307-106D1	1.57
UC307-107D1	1.57
UC308D1	2.12
UC308-108D1	2.12
UC309D1	2.82
UC309-110D1	2.82
UC309-111D1	2.82
UC309-112D1	2.82
UC310D1	3.64
UC310-114D1	3.64
UC310-115D1	3.64
UC311D1	4.56
UC311-200D1	4.56
UC311-202D1	4.56
UC311-203D1	4.56
UC312D1	5.73
UC312-204D1	5.73
UC312-206D1	5.73
UC312-207D1	5.73
UC313D1	7.17
UC313-208D1	7.17
UC314D1	8.58
UC314-211D1	8.58
UC314-212D1	8.58
UC315D1	10.4
UC315-215D1	10.4
UC315-300D1	10.4
UC316D1	12.2
UC316-302D1	12.2
UC316-303D1	12.2
UC317D1	14.7
UC317-304D1	14.7
UC318D1	16.7
UC318-307D1	16.7
UC318-308D1	16.7
UC319D1	19.2
UC319-312D1	19.2
UC320D1	23.8
UC320-315D1	23.8
UC320-400D1	23.4
UC321D1	26.9
UC322D1	31.5
UC324D1	40.8
UC326D1	50.7
UC328D1	62.8

UCS2 SERIES

UCS201D1N	.46
UCS201-008D1N	.46
UCS202D1N	.44
UCS202-009D1N	.44
UCS202-010D1N	.42
UCS203D1N	.40
UCS203-011D1N	.39
UCS204D1N	.37
UCS204-012D1N	.39
UCS205D1N	.44
UCS205-013D1N	.53
UCS205-014D1N	.51
UCS205-015D1N	.46
UCS205-100D1N	.44
UCS206D1N	.73
UCS206-101D1N	.82
UCS206-102D1N	.77
UCS206-103D1N	.73
UCS207D1N	1.08
UCS207-104D1N	1.21
UCS207-105D1N	1.15
UCS207-106D1N	1.08
UCS207-107D1N	1.01
UCS208D1N	1.43
UCS208-108D1N	1.52
UCS208-109D1N	1.46
UCS209D1N	1.54
UCS209-110D1N	1.76
UCS209-111D1N	1.68
UCS209-112D1N	1.57
UCS210D1N	1.76
UCS210-113D1N	2.03
UCS210-114D1N	1.92
UCS210-115D1N	1.81
UCS211D1N	2.38
UCS211-200D1N	2.71
UCS211-201D1N	2.60
UCS211-202D1N	2.46
UCS211-203D1N	2.34
UCS212D1	3.51
UCS212-204D1	3.78
UCS212-206D1	3.45
UCS212-207D1	3.29
UCS213D1	4.23
UCS213-208D1	4.41
UCS214D1	4.78
UCS215D1	5.36
UCS216D1	6.37
UCS217D1	7.65
UCS218D1	9.83

UCS3 SERIES

UCS305D1	.82
UCS305-014D1	.90
UCS305-015D1	.83
UCS305-100D1	.81
UCS306D1	1.28
UCS306-102D1	1.33
UCS306-103D1	1.28
UCS307D1	1.63
UCS307-104D1	1.77
UCS307-105D1	1.70
UCS307-106D1	1.64
UCS307-107D1	1.57
UCS308D1	2.21
UCS308-108D1	2.32
UCS309D1	2.93
UCS309-110D1	3.17
UCS309-111D1	3.09
UCS309-112D1	2.98
UCS310D1	3.79
UCS310-114D1	3.99
UCS310-115D1	3.85
UCS311D1	4.74
UCS311-200D1	5.14
UCS311-202D1	4.85
UCS311-203D1	4.68
UCS312D1	5.95
UCS312-204D1	6.27
UCS312-206D1	5.89
UCS312-207D1	5.72
UCS313D1	7.43
UCS313-208D1	7.63
UCS314D1	8.89
UCS314-211D1	9.13
UCS314-212D1	8.91
UCS315D1	10.8
UCS315-215D1	10.9
UCS315-300D1	10.6
UCS316D1	12.7
UCS316-302D1	12.7
UCS316-303D1	12.5
UCS317D1	15.2
UCS317-304D1	15.7
UCS318D1	17.2
UCS318-307D1	17.8
UCS318-308D1	17.4
UCS319D1	19.8
UCS319-312D1	19.7
UCS320D1	24.5
UCS320-315D1	24.5
UCS320-400D1	24.1
UCS321D1	27.8
UCS322D1	32.4
UCS324D1	41.9
UCS326D1	52.0
UCS328D1	64.4

UEL2 SERIES

UEL204D1	.51
UEL204-012D1	.45
UEL205D1	.60
UEL205-013D1	.61
UEL205-014D1	.58
UEL205-015D1	.55
UEL205-100D1	.51
UEL206D1	.99
UEL206-101D1	.94
UEL206-102D1	.89
UEL206-103D1	.84
UEL206-104D1	.80
UEL207D1	1.32
UEL207-104D1	1.45
UEL207-105D1	1.40
UEL207-106D1	1.35
UEL207-107D1	1.28
UEL208D1	1.74
UEL208-108D1	1.90
UEL208-109D1	1.82
UEL209D1	1.87
UEL209-110D1	2.05
UEL209-111D1	1.97
UEL209-112D1	1.88
UEL210D1	2.16
UEL210-113D1	2.46
UEL210-114D1	2.36
UEL210-115D1	2.25
UEL210-200D1	2.09
UEL211D1	2.91
UEL211-200D1	3.28

Continued next page …

BALL BEARING INSERTS — LBS.

UEL211-201D1	3.12
UEL211-202D1	3.02
UEL211-203D1	2.90
UEL212D1	4.12
UEL212-204D1	4.38
UEL212-206D1	4.05
UEL212-207D1	3.88
UEL3 SERIES	
UEL305D1	.95
UEL305-014D1	1.05
UEL305-015D1	1.01
UEL305-100D1	.96
UEL306D1	1.52
UEL306-102D1	1.51
UEL306-103D1	1.45
UEL307D1	1.76
UEL307-104D1	1.92
UEL307-105D1	1.84
UEL307-106D1	1.77
UEL307-107D1	1.69
UEL308D1	2.38
UEL308-108D1	2.58
UEL309D1	3.20
UEL309-110D1	3.36
UEL309-111D1	3.26
UEL309-112D1	3.15
UEL310D1	4.10
UEL310-114D1	4.29
UEL310-115D1	4.15
UEL311D1	5.16
UEL311-200D1	5.58
UEL311-202D1	5.25
UEL311-203D1	5.08
UEL312D1	6.48
UEL312-204D1	6.80
UEL312-206D1	6.48
UEL312-207D1	6.19
UEL313D1	8.09
UEL313-208D1	8.49
UEL314D1	9.70
UEL314-211D1	10.2
UEL314-212D1	9.96
UEL315D1	11.8
UEL315-215D1	12.7
UEL315-300D1	12.5
UEL316D1	14.8
UEL316-302D1	14.6
UEL316-303D1	14.9
UEL317D1	17.6
UEL317-304D1	17.7
UEL318D1	20.1
UEL318-307D1	20.7
UEL318-308D1	20.2
UEL319D1	22.9
UEL319-312D1	22.6
UEL320D1	28.7
UEL320-315D1	27.6
UEL320-400D1	27.0
UEL321D1	32.2
UEL322D1	37.9

BEARING SPEED LIMITS

Bearing Series → **AS2 SERIES**

AS201 11,000

Bearing Number → AS201 ← Speed Limit (RPMs)

BALL BEARING INSERTS — RPMs

AS2 SERIES

AS201	11,000
AS201-008	11,000
AS202	10,000
AS202-009	10,000
AS202-010	10,000
AS203	8,000
AS203-011	8,000
AS204	6,700
AS204-012	6,700
AS205	5,900
AS205-013	5,900
AS205-014	5,900
AS205-015	5,900
AS205-100	5,900
AS206	4,900
AS206-101	4,900
AS206-102	4,900
AS206-103	4,900
AS206-104	4,900
AS207	4,200
AS207-104	4,200
AS207-105	4,200
AS207-106	4,200
AS207-107	4,200
AS208	3,700
AS208-108	3,700
AS208-109	3,700

ASS2 SERIES

ASS201N	11,000
ASS201-008N	11,000
ASS202N	10,000
ASS202-009N	10,000
ASS202-010N	10,000
ASS203N	8,000
ASS203-011N	8,000
ASS204N	6,700
ASS204-012N	6,700
ASS205N	5,900
ASS205-013N	5,900
ASS205-014N	5,900
ASS205-015N	5,900
ASS205-100N	5,900
ASS206N	4,900
ASS206-101N	4,900
ASS206-102N	4,900
ASS206-103N	4,900
ASS206-104N	4,900
ASS207N	4,200
ASS207-104N	4,200
ASS207-105N	4,200
ASS207-106N	4,200
ASS207-107N	4,200
ASS208N	3,700
ASS208-108N	3,700
ASS208-109N	3,700

AEL2 SERIES

AEL201	11,000
AEL201-008	11,000
AEL202	10,000
AEL202-009	10,000
AEL202-010	10,000
AEL203	8,000
AEL203-011	8,000
AEL204	6,700
AEL204-012	6,700
AEL205	5,900
AEL205-013	5,900
AEL205-014	5,900
AEL205-015	5,900
AEL205-100	5,900
AEL206	4,900
AEL206-101	4,900
AEL206-102	4,900
AEL206-103	4,900
AEL206-104	4,900
AEL207	4,200
AEL207-104	4,200
AEL207-105	4,200
AEL207-106	4,200
AEL207-107	4,200
AEL208	3,700
AEL208-108	3,700
AEL208-109	3,700

AELS2 SERIES

AELS201N	11,000
AELS201-008N	11,000
AELS202N	10,000
AELS202-009N	10,000
AELS202-010N	10,000
AELS203N	8,000
AELS203-011N	8,000
AELS204N	6,700
AELS204-012N	6,700
AELS205N	5,900
AELS205-013N	5,900
AELS205-014N	5,900
AELS205-015N	5,900
AELS205-100N	5,900
AELS206N	4,900
AELS206-101N	4,900
AELS206-102N	4,900
AELS206-103N	4,900
AELS206-104N	4,900
AELS207N	4,200
AELS207-104N	4,200
AELS207-105N	4,200
AELS207-106N	4,200
AELS207-107N	4,200
AELS208N	3,700
AELS208-108N	3,700
AELS208-109N	3,700

JEL2 SERIES

JEL201	11,000
JEL201-008	11,000
JEL202	10,000
JEL202-009	10,000
JEL202-010	10,000
JEL203	8,000
JEL203-011	8,000
JEL204	6,700
JEL204-012	6,700
JEL205	5,900
JEL205-013	5,900
JEL205-014	5,900
JEL205-015	5,900
JEL205-100	5,900
JEL206	4,900
JEL206-101	4,900
JEL206-102	4,900
JEL206-103	4,900
JEL206-104	4,900
JEL207	4,200
JEL207-104	4,200
JEL207-105	4,200
JEL207-106	4,200
JEL207-107	4,200
JEL208	3,700
JEL208-108	3,700
JEL208-109	3,700
JEL209	3,500
JEL209-110	3,500
JEL209-111	3,500
JEL209-112	3,500
JEL210	3,100
JEL210-114	3,100
JEL210-115	3,100
JEL211	2,900
JEL211-200	2,900
JEL211-203	2,900
JEL212	2,500
JEL212-204	2,500

AR SERIES

AR201	11,000
AR201-008	11,000
AR202	10,000
AR202-009	10,000
AR202-010	10,000
AR203	8,000
AR203-011	8,000
AR204	6,700
AR204-012	6,700
AR205	5,900
AR205-013	5,900
AR205-014	5,900
AR205-015	5,900
AR205-100	5,900
AR206	4,900
AR206-101	4,900
AR206-102	4,900
AR206-103	4,900
AR206-104	4,900
AR207	4,200
AR207-104	4,200
AR207-105	4,200
AR207-106	4,200
AR207-107	4,200
AR208	3,700
AR208-108	3,700
AR208-109	3,700
AR209	3,500
AR209-110	3,500
AR209-111	3,500
AR209-112	3,500
AR210	3,100
AR210-113	3,100
AR210-114	3,100
AR210-115	3,100
AR210-200	3,100

UK2 SERIES

UK205D1: H2305X	5,900
UK205D1: HE2305	5,900
UK206D1: H2306X	4,900
UK206D1: HS2306	4,900
UK206D1: HE2306X	4,900
UK207D1: H2307X	4,200
UK207D1: HS2307	4,200
UK208D1: H2308X	3,700
UK208D1: HE2308X	3,700
UK208D1: HS2308X	3,700
UK209D1: H2309X	3,500
UK209D1: HA2309	3,500
UK209D1: HE2309X	3,500
UK209D1: HS2309X	3,500
UK210D1: H2310X	3,100
UK210D1: HS2310	3,100
UK210D1: HA2310	3,100
UK210D1: HE2310X	3,100
UK211D1: H2311X	2,900
UK211D1: HS2311	2,900
UK211D1: HA2311	2,900
UK211D1: HE2311XY	2,900
UK212D1: H2312X	2,500
UK212D1: HS2312	2,500
UK213D1: H2313X	2,400
UK213D1: HA2313X	2,400
UK213D1: HE2313	2,400
UK213D1: HS2313	2,400
UK215D1: H2315X	2,100
UK215D1: HA2315	2,100
UK215D1: HE2315	2,100
UK216D1: H2316X	2,000
UK216D1: HA2316	2,000
UK216D1: HE2316	2,000
UK217D1: H2317X	1,900
UK217D1: HA2317	1,900
UK217D1: HE2317	1,900
UK218D1: H2318X	1,700
UK218D1: HA2318	1,700

REL SERIES

REL204	6,700
REL204-012	6,700
REL205	5,900
REL205-013	5,900
REL205-014	5,900
REL205-015	5,900
REL205-100	5,900
REL206	4,900
REL206-101	4,900
REL206-102	4,900
REL206-103	4,900
REL206-104	4,900
REL207	4,200
REL207-104	4,200
REL207-105	4,200
REL207-106	4,200
REL207-107	4,200
REL208	3,700
REL208-108	3,700
REL208-109	3,700
REL209	3,500
REL209-110	3,500
REL209-111	3,500
REL209-112	3,500
REL210	3,100
REL210-113	3,100
REL210-114	3,100
REL210-115	3,100
REL210-200	3,100
REL211	2,900
REL211-200	2,900
REL211-201	2,900
REL211-202	2,900
REL211-203	2,900
REL212	2,500
REL212-204	2,500
REL212-205	2,500
REL212-206	2,500
REL212-207	2,500

UC2 SERIES

UC201D1	11,000
UC201-008D1	11,000
UC202D1	10,000
UC202-009D1	10,000
UC202-010D1	10,000
UC203D1	8,000
UC203-011D1	8,000
UC204D1	6,700
UC204-012D1	6,700
UC205D1	5,900
UC205-013D1	5,900
UC205-014D1	5,900
UC205-015D1	5,900
UC205-100D1	5,900
UC206D1	4,900
UC206-101D1	4,900
UC206-102D1	4,900
UC206-103D1	4,900

Continued next page …

Bearing Series → **AS2 SERIES**

AS201 11,000

Bearing Number → AS201 ← Speed Limit (RPMs)

NTN BEARING SPEED LIMITS

BALL BEARING INSERTS — RPMs

UC206-104D1	4,900
UC207D1	4,200
UC207-104D1	4,200
UC207-105D1	4,200
UC207-106D1	4,200
UC207-107D1	4,200
UC208D1	3,700
UC208-108D1	3,700
UC208-109D1	3,700
UC209D1	3,500
UC209-110D1	3,500
UC209-111D1	3,500
UC209-112D1	3,500
UC210D1	3,100
UC210-113D1	3,100
UC210-114D1	3,100
UC210-115D1	3,100
UC210-200D1	3,100
UC211D1	2,900
UC211-200D1	2,900
UC211-201D1	2,900
UC211-202D1	2,900
UC211-203D1	2,900
UC212D1	2,500
UC212-204D1	2,500
UC212-206D1	2,500
UC212-207D1	2,500
UC213D1	2,400
UC213-208D1	2,400
UC214D1	2,300
UC214-211D1	2,300
UC214-212D1	2,300
UC215D1	2,100
UC215-215D1	2,100
UC215-300D1	2,100
UC216D1	2,000
UC216-302D1	2,000
UC217D1	1,900
UC217-304D1	1,900
UC218D1	1,700
UC218-308D1	1,700

UC3 SERIES

UC305D1	5,400
UC305-014D1	5,400
UC305-015D1	5,400
UC305-100D1	5,400
UC306D1	4,400
UC306-102D1	4,400
UC306-103D1	4,400
UC307D1	4,000
UC307-104D1	4,000
UC307-105D1	4,000
UC307-106D1	4,000
UC307-107D1	4,000
UC308D1	3,500
UC308-108D1	3,500
UC309D1	3,100
UC309-110D1	3,100
UC309-111D1	3,100
UC309-112D1	3,100
UC310D1	2,800
UC310-114D1	2,800
UC310-115D1	2,800
UC311D1	2,600
UC311-200D1	2,600
UC311-202D1	2,600
UC311-203D1	2,600
UC312D1	2,400
UC312-204D1	2,400
UC312-206D1	2,400
UC312-207D1	2,400
UC313D1	2,200
UC313-208D1	2,200
UC314D1	2,100
UC314-211D1	2,100
UC314-212D1	2,100
UC315D1	1,900
UC315-215D1	1,900
UC315-300D1	1,900
UC316D1	1,800
UC316-302D1	1,800
UC316-303D1	1,800
UC317D1	1,700
UC317-304D1	1,700
UC318D1	1,600
UC318-307D1	1,600
UC318-308D1	1,600
UC319D1	1,500
UC319-312D1	1,500
UC320D1	1,500
UC320-315D1	1,500
UC320-400D1	1,500
UC321D1	1,400
UC322D1	1,300

UCS2 SERIES

UCS201D1N	11,000
UCS201-008D1N	11,000
UCS202D1N	10,000
UCS202-009D1N	10,000
UCS202-010D1N	10,000
UCS203D1N	8,000
UCS203-011D1N	8,000
UCS204D1N	6,700
UCS204-012D1N	6,700
UCS205D1N	5,900
UCS205-013D1N	5,900
UCS205-014D1N	5,900
UCS205-015D1N	5,900
UCS205-100D1N	5,900
UCS206D1N	4,900
UCS206-101D1N	4,900
UCS206-102D1N	4,900
UCS206-103D1N	4,900
UCS207D1N	4,200
UCS207-104D1N	4,200
UCS207-105D1N	4,200
UCS207-106D1N	4,200
UCS207-107D1N	4,200
UCS208D1N	3,700
UCS208-108D1N	3,700
UCS208-109D1N	3,700
UCS209D1N	3,500
UCS209-110D1N	3,500
UCS209-111D1N	3,500
UCS209-112D1N	3,500
UCS210D1N	3,100
UCS210-113D1N	3,100
UCS210-114D1N	3,100
UCS210-115D1N	3,100
UCS211D1N	2,900
UCS211-200D1N	2,900
UCS211-201D1N	2,900
UCS211-202D1N	2,900
UCS211-203D1N	2,900
UCS212D1	2,500
UCS212-204D1	2,500
UCS212-206D1	2,500
UCS212-207D1	2,500
UCS213D1	2,400
UCS213-208D1	2,400
UCS214D1	2,300
UCS215D1	2,100
UCS216D1	2,000
UCS217D1	1,900
UCS218D1	1,700

UCS3 SERIES

UCS305D1	5,400
UCS305-014D1	5,400
UCS305-015D1	5,400
UCS305-100D1	5,400
UCS306D1	4,400
UCS306-102D1	4,400
UCS306-103D1	4,400
UCS307D1	4,000
UCS307-104D1	4,000
UCS307-105D1	4,000
UCS307-106D1	4,000
UCS307-107D1	4,000
UCS308D1	3,500
UCS308-108D1	3,500
UCS309D1	3,100
UCS309-110D1	3,100
UCS309-111D1	3,100
UCS309-112D1	3,100
UCS310D1	2,800
UCS310-114D1	2,800
UCS310-115D1	2,800
UCS311D1	2,600
UCS311-200D1	2,600
UCS311-202D1	2,600
UCS311-203D1	2,600
UCS312D1	2,400
UCS312-204D1	2,400
UCS312-206D1	2,400
UCS312-207D1	2,400
UCS313D1	2,200
UCS313-208D1	2,200
UCS314D1	2,100
UCS314-211D1	2,100
UCS314-212D1	2,100
UCS315D1	1,900
UCS315-215D1	1,900
UCS315-300D1	1,900
UCS316D1	1,800
UCS316-302D1	1,800
UCS316-303D1	1,800
UCS317D1	1,700
UCS317-304D1	1,700
UCS318D1	1,600
UCS318-307D1	1,600
UCS318-308D1	1,600
UCS319D1	1,500
UCS319-312D1	1,500
UCS320D1	1,500
UCS320-315D1	1,500
UCS320-400D1	1,500
UCS321D1	1,400
UCS322D1	1,300

UEL2 SERIES

UEL204D1	6,700
UEL204-012D1	6,700
UEL205D1	5,900
UEL205-013D1	5,900
UEL205-014D1	5,900
UEL205-015D1	5,900
UEL205-100D1	5,900
UEL206D1	4,900
UEL206-101D1	4,900
UEL206-102D1	4,900
UEL206-103D1	4,900
UEL206-104D1	4,900
UEL207D1	4,200
UEL207-104D1	4,200
UEL207-105D1	4,200
UEL207-106D1	4,200
UEL207-107D1	4,200
UEL208D1	3,700
UEL208-108D1	3,700
UEL208-109D1	3,700
UEL209D1	3,500
UEL209-110D1	3,500
UEL209-111D1	3,500
UEL209-112D1	3,500
UEL210D1	3,100
UEL210-113D1	3,100
UEL210-114D1	3,100
UEL210-115D1	3,100
UEL210-200D1	3,100
UEL211D1	2,900
UEL211-200D1	2,900
UEL211-201D1	2,900
UEL211-202D1	2,900
UEL211-203D1	2,900
UEL212D1	2,500
UEL212-204D1	2,500
UEL212-206D1	2,500
UEL212-207D1	2,500

UEL3 SERIES

UEL305D1	5,400
UEL305-014D1	5,400
UEL305-015D1	5,400
UEL305-100D1	5,400
UEL306D1	4,400
UEL306-102D1	4,400
UEL306-103D1	4,400
UEL307D1	4,000
UEL307-104D1	4,000
UEL307-105D1	4,000
UEL307-106D1	4,000
UEL307-107D1	4,000
UEL308D1	3,500
UEL308-108D1	3,500
UEL309D1	3,100
UEL309-110D1	3,100
UEL309-111D1	3,100
UEL309-112D1	3,100
UEL310D1	2,800
UEL310-114D1	2,800
UEL310-115D1	2,800
UEL311D1	2,600
UEL311-200D1	2,600
UEL311-202D1	2,600
UEL311-203D1	2,600
UEL312D1	2,400
UEL312-204D1	2,400
UEL312-206D1	2,400
UEL312-207D1	2,400
UEL313D1	2,200
UEL313-208D1	2,200
UEL314D1	2,100
UEL314-211D1	2,100
UEL314-212D1	2,100
UEL315D1	1,900
UEL315-215D1	1,900
UEL315-300D1	1,900
UEL316D1	1,800
UEL316-302D1	1,800
UEL316-303D1	1,800
UEL317D1	1,700
UEL317-304D1	1,700
UEL318D1	1,600
UEL318-307D1	1,600
UEL318-308D1	1,600
UEL319D1	1,500
UEL319-312D1	1,500
UEL320D1	1,500
UEL320-315D1	1,500
UEL320-400D1	1,500
UEL321D1	1,400
UEL322D1	1,300

SERIES 1AS-7AS

Units: **INCHES**

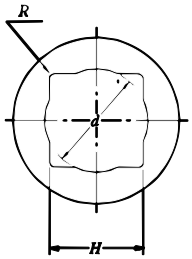

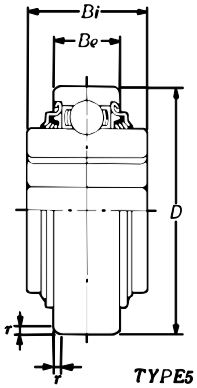

TYPE5

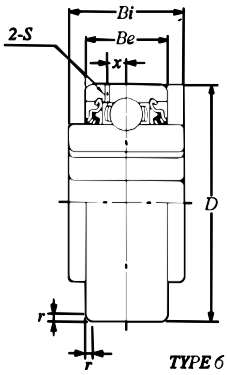

TYPE 6

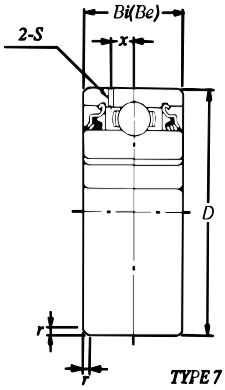

TYPE 7

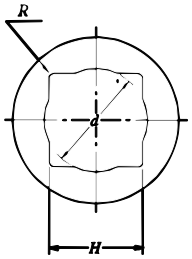

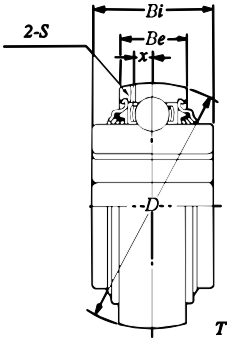

TYPE 1

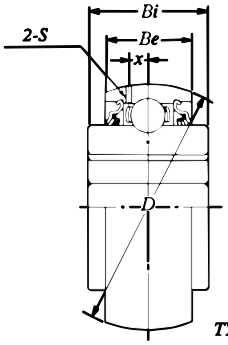

TYPE 2

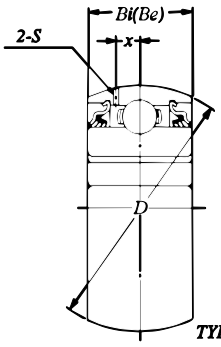

TYPE 3

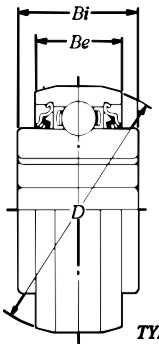

TYPE 4

DISC HARROW BEARINGS

Bearing No.	Type	Shaft Size	Sq. Bore Dim. ±.005 H	Max. d	Max. R	Outside Diameter D	Ring Widths Be	Ring Widths Bi	r	s	x	Basic Load Ratings (lbs) Dynamic C	Basic Load Ratings (lbs) Static C_o	Weight (lbs)
4AS08-⅞	4	⅞	.9050	.961	.089	3.4385/3.4375	1.189	1.437	—	—	—	6,500	4,000	2.02
1AS08-1	1	1	1.0300	1.094	.089	3.1496/3.1491	.709	1.437	—	—	—	6,500	4,000	1.38
2AS08-1	2	1	1.0300	1.094	.089	3.1496/3.1491	1.189	1.437	—	—	—	6,500	4,000	1.68
4AS08-1	4	1	1.0300	1.094	.089	3.4385/3.4375	1.189	1.437	—	—	—	6,500	4,000	1.94
1AS08-1 ⅛	1	1 ⅛	1.1800	1.236	.089	3.1496/3.1491	.709	1.437	—	—	—	6,500	4,000	1.27
2AS08-1 ⅛	2	1 ⅛	1.1800	1.236	.089	3.1496/3.1491	1.189	1.437	—	—	—	6,500	4,000	1.57
2AS08-1 ⅛D1	2	1 ⅛	1.1800	1.236	.089	3.1496/3.1491	1.189	1.437	—	.087	.260	6,500	4,000	1.57
4AS08-1 ⅛	4	1 ⅛	1.1800	1.236	.089	3.4385/3.4375	1.189	1.437	—	—	—	6,500	4,000	1.83
1AS08-1 5/32D1	1	1 5/32	1.1811	1.252	.089	3.1496/3.1491	.827	1.437	—	.087	.260	6,500	4,000	1.27
2AS09-1 ¼D1	2	1 ¼	1.2900	1.370	.089	3.3465/3.3459	1.189	1.437	—	.087	.264	7,350	4,600	1.75
4AS09-1 ¼	4	1 ¼	1.2900	1.370	.089	3.4424/3.4346	1.189	1.437	—	—	—	7,350	4,600	1.81
2AS10-1 ⅛	2	1 ⅛	1.1800	1.236	.089	3.5433/3.5427	1.189	1.437	—	—	—	7,900	5,200	2.13
3AS10-1 ⅛	3	1 ⅛	1.1800	1.236	.089	3.5433/3.5427	1.189	1.189	—	—	—	7,900	5,200	1.90
1AS11-1 ½D1	1	1 ½	1.5311	1.622	.089	3.9370-3.9364	.984	1.750	—	.098	.299	9,750	6,550	2.56
3AS11-1 ½	3	1 ½	1.5311	1.622	.089	3.9370-3.9364	1.311	1.311	—	—	—	9,750	6,550	2.40
3AS11-1 ½D1	3	1 ½	1.5311	1.622	.089	3.9370-3.9364	1.311	1.311	—	.098	.299	9,750	6,550	2.40
4AS11-1 ½	4	1 ½	1.5311	1.622	.089	4.1250/4.1200	1.437	1.750	—	—	—	9,750	6,550	3.20
3AS14-2D1	3	2	2.0551	2.161	.157	4.9213/4.9205	1.563	1.563	—	.118	.370	14,000	9,900	4.30
5AS08-1 ⅛	5	1 ⅛	1.1800	1.236	.089	3.1496/3.1491	.709	1.437	.079	—	—	6,550	4,000	1.27
6AS08-1 ⅛D1	6	1 ⅛	1.1800	1.236	.089	3.1496/3.1491	1.189	1.437	.079	.087	.264	6,550	4,000	1.57
6AS09-1 ¼	6	1 ¼	1.2900	1.370	.089	3.3460/3.3450	1.189	1.437	.079	—	—	7,350	4,600	1.75
6AS09-1 ¼D1	6	1 ¼	1.2900	1.370	.089	3.3460/3.3450	1.189	1.437	.079	.087	.260	7,350	4,600	1.75
7AS10-1 ⅛D1	7	1 ⅛	1.1800	1.236	.089	3.5433/3.5427	1.189	1.189	.079	0.87	.264	7,900	5,200	1.90
6AS11-1 ½V1	6	1 ½	1.5311	1.622	.089	4.0000/3.9990	1.437	1.750	.098	—	—	9,750	6,550	3.06
7AS11-1 ½	7	1 ½	1.5311	1.622	.089	3.9370/3.9364	1.311	1.311	.098	—	—	9,750	6,550	2.40
7AS11-1 ½D1	7	1 ½	1.5311	1.622	.089	3.9370/3.9364	1.311	1.311	.098	.098	.299	9,750	6,550	2.40

Ring width tolerances are:
Sizes up to and including AS110 +.000 to -.005
AS11 through A14, +.000 to -.006

Units: **INCHES**

SERIES 1AC-7AC

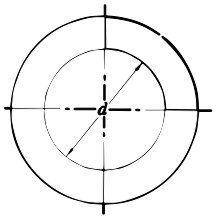

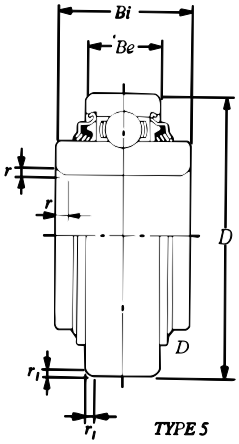

TYPE 5

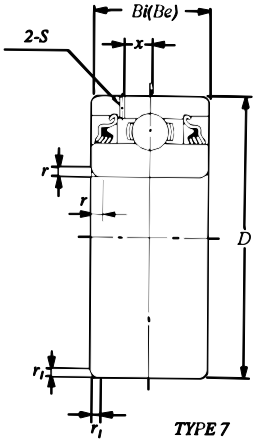

TYPE 7

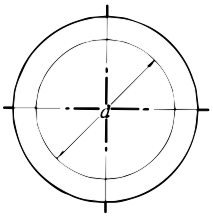

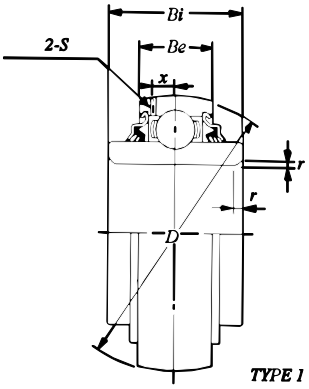

TYPE 1

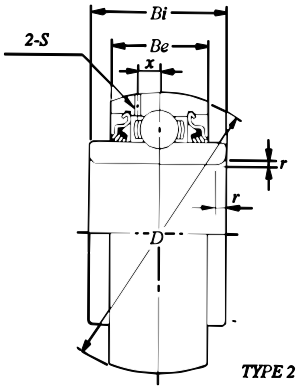

TYPE 2

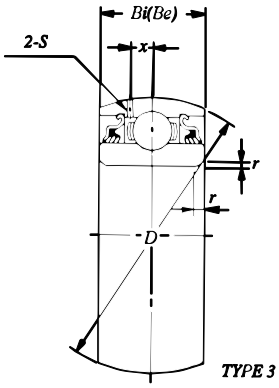

TYPE 3

DISC HARROW BEARINGS

Bearing No.	Type	Bore	Outside Diameter	Ring Widths						Basic Load Ratings (lbs)		Weight (lbs)
		d	*D*	*Be*	*Bi*	*r*	r_1	*s*	*x*	Dynamic *C*	Static C_o	
1AC08-1 3/16	1	1.1880/1.1875	3.1496/3.1491	.709	1.189	.079	—	—	—	6,550	4,000	1.22
2AC08-1 1/2D1	2	1.5005/1.5000	3.1496/3.1491	1.189	1.689	.079	—	.087	.260	6,550	4,000	1.60
1AC09D1V1	1	1.7776/1.7717	3.3465/3.3459	.866	1.437	.079	—	.087	.264	7,350	4,600	1.30
3AC09	3	1.7717/1.7712	3.3465/3.3459	1.189	1.189	.079	—	—	—	7,350	4,600	1.44
3AC09D1	3	1.7717/1.7712	3.3465/3.3459	1.189	1.189	.079	—	.087	.284	7,350	4,600	1.44
3AC09-1 1/2	3	1.5350/1.5250	3.3465/3.3459	1.189	1.189	.079	—	—	—	7,350	4,600	1.58
3AC09-1 1/2D1	3	1.5350/1.5250	3.3465/3.3459	1.189	1.189	.079	—	.087	.264	7,350	4,600	1.58
3AC10-1 3/4	3	1.7850/1.7750	3.5433/3.5427	1.189	1.189	.079	—	—	—	7,900	5,200	1.68
3AC10-1 3/4D1	3	1.7850/1.7750	3.5433/3.5427	1.189	1.189	.079	—	.087	.264	7,900	5,200	1.68
3AC10-1 15/16	3	1.9380/1.9375	3.5433/3.5427	1.189	1.189	.079	—	—	—	7,900	5,200	1.57
3AC10-1 15/16D1	3	1.9380/1.9375	3.5433/3.5427	1.189	1.189	.079	—	.087	.264	7,900	5,200	1.57
1AC11-2 3/16D1V1	1	2.1939/2.1880	3.9370/3.9364	.984	1.563	.098	—	.098	.299	9,750	6,550	1.92
3AC11-2 3/16	3	2.1880/2.1874	3.9370/3.9364	1.311	1.311	.098	—	—	—	9,750	6,550	2.11
3AC11-2 3/16D1	3	2.1880/2.1874	3.9370/3.9364	1.311	1.311	.098	—	.098	.299	9,750	6,550	2.11
3AC14D1	3	2.7559/2.7553	4.9213/4.9205	1.563	1.563	.098	—	.118	.370	14,000	9,900	3.44
5AC10-1 15/16	5	1.9380/1.9375	3.5433/3.5427	.787	1.937	.079	.079	—	—	7,900	5,200	1.62
7AC10-1 15/16	7	1.9380/1.9375	3.5433/3.5427	1.189	1.189	.079	.079	—	—	7,900	5,200	1.57
7AC11-2 3/16D1	7	2.1880/2.1874	3.9370/3.9364	1.311	1.311	.098	.098	.098	.299	9,750	6,550	2.11

SERIES 1AH-3AH

Units: **INCHES**

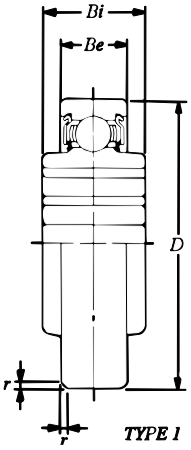

TYPE 1

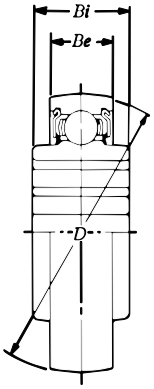

TYPE 2

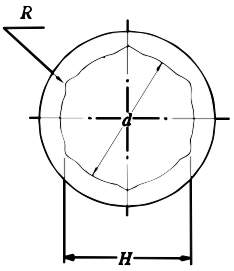

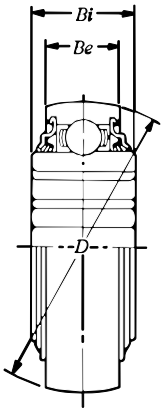

TYPE 2...V2

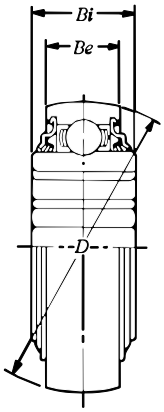

TYPE 2...V2

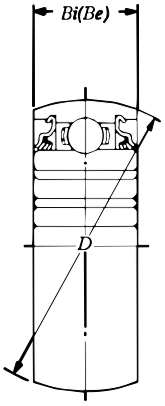

TYPE 3...V2

HEX BORE BEARINGS

Bearing No.	Type	Shaft Size	Hex Bore +.005 -.000 *H*	Max. *d*	Max. *R*	Outside Diameter *D*	Ring Widths ±.005 *Be*	Ring Widths ±.005 *Bi*	*r*	Basic Load Ratings (lbs) *Dynamic* *C*	Basic Load Ratings (lbs) *Static* C_o	Weight (lbs)
1AH04-11/16	1	11/16	.695	.713	.010	1.8504/1.8499	.551	.827	.059	2,890	1,500	.289
1AH05-7/8	1	7/8	.876	.898	.010	2.0472/2.0467	.591	1.000	.059	3,150	1,770	.379
2AH05-7/8	2	7/8	.876	.898	.010	2.0472/2.0467	.591	1.000	—	3,150	1,770	.379
1AH06-1	1	1	1.001	1.028	.010	2.4409/2.4404	.630	.945	.059	4,400	2,540	.558
2AH06-1	2	1	1.001	1.028	.010	2.4409/2.4404	.630	.945	—	4,400	2,540	.558
2AH07-1 1/8	2	1 1/8	1.126	1.154	.010	2.8346/2.8341	.669	1.484	—	5,750	3,450	1.02
2AH08-1 1/4V2	2	1 1/4	1.260	1.287	.010	3.1496/3.1491	.709	1.437	—	6,550	4,000	1.28
2AH09-1 1/2	2	1 1/2	1.501	1.535	.010	3.3465/3.3459	.748	1.181	—	7,350	4,600	1.22
3AH10-1 5/8V2	3	1 5/8	1.626	1.665	.010	3.5433/3.5427	1.189	1.189	—	7,900	5,200	1.63

SPHERICAL ROLLER BEARING PILLOW BLOCK NUMBERING

Metric Series

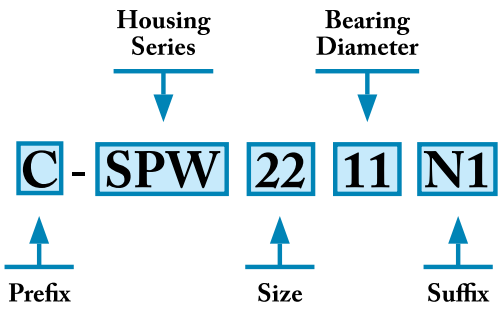

Inch Series

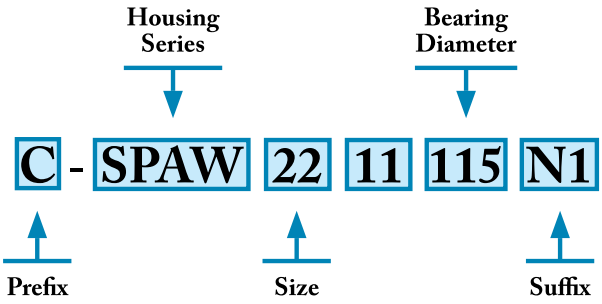

1. PREFIX

C:	Taconite service seals
CM:	Taconite service seal + end cover

2. HOUSING SERIES

SPW:	Sealed spherical pillow block, metric with inch shaft dimension
SPAW:	Sealed spherical pillow block, inch*
SFCW:	Sealed spherical flanged block, metric
SAF:	Split pillow block, cast iron housing
SAFS:	Split pillow block, cast steel housing
PSAF:	Split pillow block, cast iron, 4 bolt option
FSPAW:	Sealed pillow block, inch, 4 bolt option

3. BEARING

W22xx:	MX-W222xx Series sealed spherical roller bearing

4. Bore Diameter (-Xnn)

X:	Number of inches
nn:	Number of 1/16 inches e.g.:-115 indicates a 1-15/16” bore

5. SUFFIX

N1:	Ductile cast iron housing
F:	Solid base
G:	One stabilizing ring included

* SPAW dimensionally the same as SAF housing

SPW
PILLOW
BLOCKS

Units: Millimeters
INCHES

SPW22...

2 Bolt Base Solid Base

SPW PILLOW BLOCKS

Shaft Diameter *d* Inches	Complete Pillow Block Number	Pillow Block Housing	Bearing Number	Basic Load Ratings (lbs) *Dynamic C*	Basic Load Ratings (lbs) *Static C_0*	Adaptaer Locknut and Lockwasher	Weight (lbs)
1 15/16	SPW2211-115N1	SP211N1	MX-W22211BLLKC3	21,000	24,700	HA2311M1	13
50	SPW2211N1	SP211N1	MX-W22211BLLKC3	21,000	24,700	H2311XM1	13
2	SPW2211-200N1	SP211N1	MX-W22211BLLKC3	21,000	24,700	HE2311XYM1	13
2 3/16	SPW2213-203N1	SP213N1	MX-W22213BLLKC3	32,000	40,000	HA2313M1	18
2 1/4	SPW2213-204N1	SP213N1	MX-W22213BLLKC3	32,000	40,000	HE2313XM1	18
60	SPW2213N1	SP213N1	MX-W22213BLLKC3	32,000	40,000	H2313XM1	18
2 3/8	SPW2213-206N1	SP213N1	MX-W22213BLLKC3	32,000	40,000	HS2313XM1	18
2 7/16	SPW2215-207N1	SP215N1	MX-W22215BLLKC3	37,500	50,000	HA2315M1	20
2 1/2	SPW2215-208N1	SP215N1	MX-W22215BLLKC3	37,500	50,000	HE2315XM1	20
65	SPW2215N1	SP215N1	MX-W22215BLLKC3	37,500	50,000	H2315XM1	20
2 15/16	SPW2217-215N1	SP217N1	MX-W22217BLLKC3	46,500	61,000	HA2317XM1	31
75	SPW2217N1	SP217N1	MX-W22217BLLKC3	46,500	61,000	H2317XM1	31
3	SPW2217-300N1	SP217N1	MX-W22217BLLKC3	46,500	61,000	HE2317XM1	31
3 7/16	SPW2220-307N1	SP220N1	MX-W22220BLLKC3	69,500	92,000	HA2320M1	54
3 1/2	SPW2220-308N1	SP220N1	MX-W22220BLLKC3	69,500	92,000	HE2320XM1	54
90	SPW2220N1	SP220N1	MX-W22220BLLKC3	69,500	92,000	H2320XM1	54
100	SPW2222N1	SP222N1	MX-W22222BLLKC3	92,000	128,000	H2322XM1	71
3 15/16	SPW2222-315N1	SP222N1	MX-W22222BLLKC3	92,000	128,000	HA2322M1	71
4	SPW2222-400N1	SP222N1	MX-W22222BLLKC3	92,000	128,000	HE2322XM1	71
4 3/16	SPW2224-403N1	SP224N1	MX-W22224BLLKC3	109,000	157,000	HA2324M1	84
4 1/4	SPW2224-404N1	SP224N1	MX-W22224BLLKC3	109,000	157,000	HE2324M1	84
110	SPW2224N1	SP224N1	MX-W22224BLLKC3	109,000	157,000	H2324XM1	84
4 7/16	SPW2226-407N1	SP226N1	MX-W22226BLLKC3	127,000	176,000	HA2326M1	101
4 1/2	SPW2226-408N1	SP226N1	MX-W22226BLLKC3	127,000	176,000	HE2326M1	101
115	SPW2226N1	SP226N1	MX-W22226BLLKC3	127,000	176,000	H2326M1	101
125	SPW2228N1	SP228N1	MX-W22228BLLKC3	153,000	218,000	H2328M1	118
4 15/16	SPW2228-415N1	SP228N1	MX-W22228BLLKC3	153,000	218,000	HA2328M1	118
5	SPW2228-500N1	SP228N1	MX-W22228BLLKC3	153,000	218,000	HE2328M1	118
5 7/16	SPW2232-507N1	SP232N1	MX-W22232BLLKC3	196,000	290,000	HA2332M1	171
5 1/2	SPW2232-508N1	SP232N1	MX-W22232BLLKC3	196,000	290,000	HE2332M1	171
140	SPW2232N1	SP232N1	MX-W22232BLLKC3	196,000	290,000	H2332M1	171

C(M)-SPW22...

How to Order

Example: When you order one SPW2220N1, you will receive an assembly consisting of one SP220N1 Pillow Block Housing, one MX-W22220BLLKC3 Bearing, and one H2320XM1 Adapter.

To order a solid base housing, add suffix F to the part number (example: SPW2220FN1).

When C-SPW2220N1 or CM-SPW2220N1 are specified, external covers will be supplied with the unit.

Example: “C” prefix - 2 taconite service seals

“CM” prefix - 1 taconite service seal, 1 end cover

Notes: Taconite service seals for which dimensions are shown are standard. For dimensions and availability of non-standard taconite service seals, consult NTN Engineering.

All units are supplied in float arrangement and may be converted to fixed by relocation of a snap ring.

All bearing inserts are supplied prelubricated with Shell Alvania™ 3 grease.

Solid base housings may be drilled for 2 or 4 bolt arrangement.

Grease fittings are provided with all units.
An eye bolt is provided on housings SP228N1 and SP23N1.

SPW PILLOW BLOCKS

Complete Pillow Block Number	Dimensions (Millimeters)													Set Bolts	
	h	*a*	*b*	*b1*	*c*	*m*	*m1*	*n*	*w*	*l*	*l1*	*u*	*v*	(2 req'd)	(4 req'd)
SPW2211-115N1	70	255	62	70	28	210	200	40	136	120	114	18	23	M16	M12
SPW2211N1	70	255	62	70	28	210	200	40	136	120	114	18	23	M16	M12
SPW2211-200N1	70	255	62	70	28	210	200	40	136	120	114	18	23	M16	M12
SPW2213-203N1	80	275	70	80	30	230	220	48	157	138	126	18	23	M16	M12
SPW2213-204N1	80	275	70	80	30	230	220	48	157	—	—	18	23	M16	M12
SPW2213N1	80	275	70	80	30	230	220	48	157	—	—	18	23	M16	M12
SPW2213-206N1	80	275	70	80	30	230	220	48	157	—	—	18	23	M16	M12
SPW2215-207N1	80	280	72	80	30	230	220	48	163	132	123	18	23	M16	M12
SPW2215-208N1	80	280	72	80	30	230	220	48	163	—	—	18	23	M16	M12
SPW2215N1	80	280	72	80	30	230	220	48	163	—	—	18	23	M16	M12
SPW2217-216N1	95	320	80	90	32	260	252	52	192	156	146	22	27	M20	M16
SPW2217N1	95	320	80	90	32	260	252	52	192	—	—	22	27	M20	M16
SPW2217-300N1	95	320	80	90	32	260	252	52	192	—	—	22	27	M20	M16
SPW2220-307N1	112	380	95	110	40	320	300	66	226	185	175	26	32	M24	M16
SPW2220-308N1	112	380	95	110	40	320	300	66	226	—	—	26	32	M24	M16
SPW2220N1	112	380	95	110	40	320	300	66	226	—	—	26	32	M24	M16
SPW2222N1	125	410	100	120	45	350	320	74	252	—	—	26	32	M24	M16
SPW2222-315N1	125	410	100	120	45	350	320	74	252	198	185	26	32	M24	M16
SPW2222-400N1	125	410	100	120	45	350	320	74	252	—	—	26	32	M24	M16
SPW2224-403N1	140	410	105	120	45	350	330	74	274	203	190	26	32	M24	M16
SPW2224-404N1	140	410	105	120	45	350	330	74	274	—	—	26	32	M24	M16
SPW2224N1	140	410	105	120	45	350	330	74	274	—	—	26	32	M24	M16
SPW2226-407N1	150	445	115	130	50	380	370	80	293	219	206	28	36	M24	M20
SPW2226-408N1	150	445	115	130	50	380	370	80	293	—	—	28	36	M24	M20
SPW2226N1	150	445	115	130	50	380	370	80	293	—	—	28	36	M24	M20
SPW2228N1	150	500	120	150	50	420	400	80	305	—	—	33	42	M30	M24
SPW2228-415N1	150	500	120	150	50	420	400	80	305	232	219	33	42	M30	M24
SPW2228-500N1	150	500	120	150	50	420	400	80	305	—	—	33	42	M30	M24
SPW2232-507N1	170	550	135	160	60	470	450	90	340	260	247	33	42	M30	M24
SPW2232-508N1	170	550	135	160	60	470	450	90	340	—	—	33	42	M30	M24
SPW2232N1	170	550	135	160	60	470	450	90	340	—	—	33	42	M30	M24

SPAW PILLOW BLOCKS

Units: Millimeters
INCHES

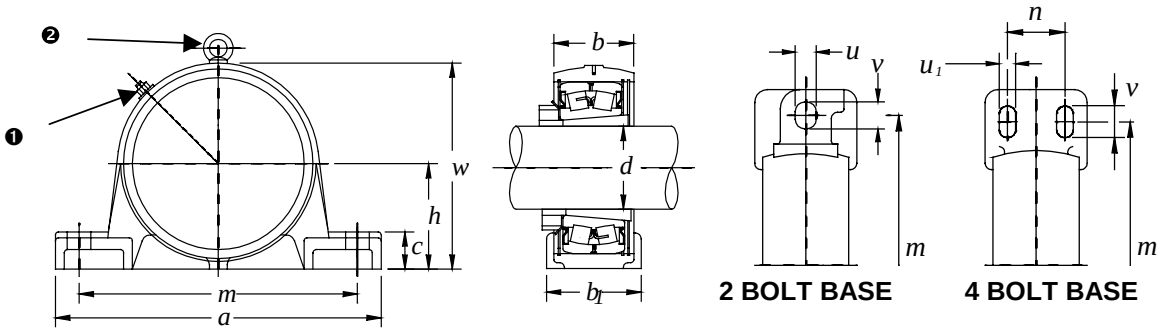

SPAW22...

2 BOLT BASE

4 BOLT BASE

SPAW PILLOW BLOCKS

Shaft Diameter *d* Inches	Complete Pillow Block Number	Flange Block Housing	Bearing Number	Basic Load Ratings (lbs) *Dynamic C*	Basic Load Ratings (lbs) *Static C_0*	Adaptaer Locknut and Lockwasher	Weight (lbs)
1 15/16	SPAW2211-115N1	SPA211N1	MX-W22211BLLKC3	21,000	24,700	HA2311M1	13
50	SPAW2211N1	SPA211N1	MX-W22211BLLKC3	21,000	24,700	H2311XM1	13
2	SPAW2211-200N1	SPA211N1	MX-W22211BLLKC3	21,000	24,700	HE2311XYM1	13
2 3/16	SPAW2213-203N1	SPA213N1	MX-W22213BLLKC3	32,000	40,000	HA2313M1	18
	FSPAW2213-203N1	FSPA213N1	MX-W22213BLLKC3	32,000	40,000	HA2313M1	18
2 1/4	SPAW2213-204N1	SPA213N1	MX-W22213BLLKC3	32,000	40,000	HE2313XM1	18
	FSPAW2213-204N1	FSPA213N1	MX-W22213BLLKC3	32,000	40,000	HE2313XM1	18
60	SPAW2213N1	SPA213N1	MX-W22213BLLKC3	32,000	40,000	H2313XM1	18
	FSPAW2213N1	FSPA213N1	MX-W22213BLLKC3	32,000	40,000	H2313XM1	18
2 3/8	SPAW2213-206N1	SPA213N1	MX-W22213BLLKC3	32,000	40,000	HS2313XM1	18
	FSPAW2213-206N1	FSPA213N1	MX-W22213BLLKC3	32,000	40,000	HS2313XM1	18
2 7/16	SPAW2215-207N1	SPA215N1	MX-W22215BLLKC3	37,500	50,000	HA2315M1	20
	FSPAW2215-207N1	FSPA215N1	MX-W22215BLLKC3	37,500	50,000	HA2315M1	20
2 1/2	SPAW2215-208N1	SPA215N1	MX-W22215BLLKC3	37,500	50,000	HE2315XM1	20
	FSPAW2215-208N1	FSPA215N1	MX-W22215BLLKC3	37,500	50,000	HE2315XM1	20
65	SPAW2215N1	SPA215N1	MX-W22215BLLKC3	37,500	50,000	H2315XM1	20
	FSPAW2215N	FSPA215N1	MX-W22215BLLKC3	37,500	50,000	H2315XM1	20
2 15/16	SPAW2217-215N1	SPA217N1	MX-W22217BLLKC3	46,500	61,000	HA2317XM1	31
	FSPAW2217-215N1	FSPA217N1	MX-W22217BLLKC3	46,500	61,000	HA2317XM1	31
75	SPAW2217N1	SPA217N1	MX-W22217BLLKC3	46,500	61,000	H2317XM1	31
	FSPAW2217N1	FSPA217N1	MX-W22217BLLKC3	46,500	61,000	H2317XM1	31
3	SPAW2217-300N1	SPA217N1	MX-W22217BLLKC3	46,500	61,000	HE2317XM1	31
	FSPAW2217-300N1	FSPA217N1	MX-W22217BLLKC3	46,500	61,000	HE2317XM1	31
3 7/16	SPAW2220-307N1	SPA220N1	MX-W22220BLLKC3	69,500	92,000	HA2320M1	54
	FSPAW2220-307N1	FSPA220N1	MX-W22220BLLKC3	69,500	92,000	HA2320M1	54
3 1/2	SPAW2220-308N1	SPA220N1	MX-W22220BLLKC3	69,500	92,000	HE2320XM1	54
	FSPAW2220-308N1	FSPA220N1	MX-W22220BLLKC3	69,500	92,000	HE2320XM1	54
90	SPAW2220N1	SPA220N1	MX-W22220BLLKC3	69,500	92,000	H2320XM1	54
	FSPAW2220N1	FSPA220N1	MX-W22220BLLKC3	69,500	92,000	H2320XM1	54
100	SPAW2222N1	SPA222N1	MX-W22222BLLKC3	92,000	128,000	H2322XM1	71
3 15/16	SPAW2222-315N1	SPA222N1	MX-W22222BLLKC3	92,000	128,000	HA2322XM1	71
4	SPAW2222-400N1	SPA222N1	MX-W22222BLLKC3	92,000	128,000	HE2322XM1	71
4 3/16	SPAW2224-403N1	SPA224N1	MX-W22224BLLKC3	109,000	157,000	HA2324M1	84
4 1/4	SPAW2224-404N1	SPA224N1	MX-W22224BLLKC3	109,000	157,000	HE2324M1	84
110	SPAW2224N1	SPA224N1	MX-W22224BLLKC3	109,000	157,000	H2324XM1	84
4 7/16	SPAW2226-407N1	SPA226N1	MX-W22226BLLKC3	127,000	176,000	HA2326M1	101
4 1/2	SPAW2226-408N1	SPA226N1	MX-W22226BLLKC3	127,000	176,000	HE2326M1	101
115	SPAW2226N1	SPA226N1	MX-W22226BLLKC3	127,000	176,000	H2326M1	101
125	SPAW2228N1	SPA228N1	MX-W22228BLLKC3	153,000	218,000	H2328M1	118
4 15/16	SPAW2228-415N1	SPA228N1	MX-W22228BLLKC3	153,000	218,000	HA2328M1	118
5	SPAW2228-500N1	SPA228N1	MX-W22228BLLKC3	153,000	218,000	HE2328M1	118
5 7/16	SPAW2232-507N1	SPA232N1	MX-W22232BLLKC3	196,000	290,000	HA2332M1	171
5 1/2	SPAW2232-508N1	SPA232N1	MX-W22232BLLKC3	196,000	290,000	HE2332M1	171
140	SPAW2232N1	SPA232N1	MX-W22232BLLKC3	196,000	290,000	H2332M1	171

Units: Millimeters
INCHES

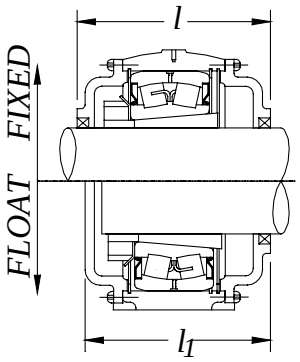

C(M)-SPAW22...

How to Order

Example: When you order one SPAW2220-307N1, you will receive an assembly consisting of one SPA220N1 Pillow Block Housing, one MX-W22220BLLKC3 Bearing, and one HA2320M1 Adapter.

When C-SPAW2220N1 or CM-SPAW2220N1 are specified, external covers will be supplied with the unit.

Example: "C" prefix - 2 taconite service seals
"CM" prefix - 1 taconite service seal, 1 end cover

Notes: Taconite service seals for which dimensions are shown are standard. For dimensions and availability of non-standard taconite service seals, consult NTN Engineering.

All units are supplied in float arrangement and may be converted to fixed by relocation of a snap ring.

All bearing inserts are supplied prelubricated with Shell Alvania™ 3 grease.

Grease fittings are provided with all units.
An eye bolt is provided on housings SPA28N1 and SPA32N1.

SPAW PILLOW BLOCKS

Complete Pillow Block Number	Dimensions (Inches)													Set Bolts	
	h	*a*	*b*	*b1*	*c*	*m*	*n*	*w*	*l*	*l1*	*u*		*v*	Size	No.
SPAW2211-115N1	2 3/4	9.606	2.441	2.756	1.102	7 5/8	–	5.354	4.724	4.488	0.709	–	7/8	5/8	2
SPAW2211N1	2 3/4	9.606	2.441	2.756	1.102	7 5/8	–	5.354	4.724	4.488	0.709	–	7/8	5/8	2
SPAW2211-200N1	2 3/4	9.606	2.441	2.756	1.102	7 5/8	–	5.354	4.724	4.488	0.709	–	7/8	5/8	2
SPAW2213-203N1	3	10.827	2.756	3.110	1.024	8 13/16	2	6.024	5.433	4.961	0.709	–	1 5/16	5/8	2
FSPAW2213-203N1	3	10.827	2.756	3.110	1.024	8 13/16	2	6.024	5.433	4.961	–	0.591	1 5/16	1/2	4
SPAW2213-204N1	3	10.827	2.756	3.110	1.024	8 13/16	2	6.024	5.433	4.961	0.709	–	1 5/16	5/8	2
FSPAW2213-204N1	3	10.827	2.756	3.110	1.024	8 13/16	2	6.024	5.433	4.961	–	0.591	1 5/16	1/2	4
SPAW2213N1	3	10.827	2.756	3.110	1.024	8 13/16	2	6.024	5.433	4.961	0.709	–	1 5/16	5/8	2
FSPAW2213N1	3	10.827	2.756	3.110	1.024	8 13/16	2	6.024	5.433	4.961	–	0.591	1 5/16	1/2	4
SPAW2213-206N1	3	10.827	2.756	3.110	1.024	8 13/16	2	6.024	5.433	4.961	0.709	–	1 5/16	5/8	2
FSPAW2213-206N1	3	10.827	2.756	3.110	1.024	8 13/16	2	6.024	5.433	4.961	–	0.591	1 5/16	1/2	4
SPAW2215-207N1	3 1/4	11.024	2.835	3.110	1.299	9 1/8	1 7/8	6.535	5.197	4.843	0.709	–	1 1/8	5/8	2
FSPAW2215-207N1	3 1/4	11.024	2.835	3.110	1.299	9 1/8	1 7/8	6.535	5.197	4.843	–	0.591	1 1/8	1/2	4
SPAW2215-208N1	3 1/4	11.024	2.835	3.110	1.299	9 1/8	1 7/8	6.535	5.197	4.843	0.709	–	1 1/8	5/8	2
FSPAW2215-208N1	3 1/4	11.024	2.835	3.110	1.299	9 1/8	1 7/8	6.535	5.197	4.843	–	0.591	1 1/8	1/2	4
SPAW2215N1	3 1/4	11.024	2.835	3.110	1.299	9 1/8	1 7/8	6.535	5.197	4.843	0.709	–	1 1/8	5/8	2
FSPAW2215N	3 1/4	11.024	2.835	3.110	1.299	9 1/8	1 7/8	6.535	5.197	4.843	–	0.591	1 1/8	1/2	4
SPAW2217-215N1	3 3/4	12.598	3.150	3.504	1.260	10 7/16	2 1/8	7.559	6.142	5.748	0.866	–	1 5/16	3/4	2
FSPAW2217-215N1	3 3/4	12.598	3.150	3.504	1.260	10 7/16	2 1/8	7.559	6.142	5.748	–	0.709	1 5/16	5/8	4
SPAW2217N1	3 3/4	12.598	3.150	3.504	1.260	10 7/16	2 1/8	7.559	6.142	5.748	0.866	–	1 5/16	3/4	2
FSPAW2217N1	3 3/4	12.598	3.150	3.504	1.260	10 7/16	2 1/8	7.559	6.142	5.748	–	0.709	1 5/16	5/8	4
SPAW2217-300N1	3 3/4	12.598	3.150	3.504	1.260	10 7/16	2 1/8	7.559	6.142	5.748	0.866	–	1 5/16	3/4	2
FSPAW2217-300N1	3 3/4	12.598	3.150	3.504	1.260	10 7/16	2 1/8	7.559	6.142	5.748	–	0.709	1 5/16	5/8	4
SPAW2220-307N1	4 1/2	14.961	3.740	4.331	1.654	12 3/8	2 3/8	8.976	7.283	6.890	1.024	–	1 5/8	7/8	2
FSPAW2220-307N1	4 1/2	14.961	3.740	4.331	1.654	12 3/8	2 3/8	8.976	7.283	6.890	–	0.866	1 5/8	3/4	4
SPAW2220-308N1	4 1/2	14.961	3.740	4.331	1.654	12 3/8	2 3/8	8.976	7.283	6.890	1.024	–	1 5/8	7/8	2
FSPAW2220-308N1	4 1/2	14.961	3.740	4.331	1.654	12 3/8	2 3/8	8.976	7.283	6.890	–	0.866	1 5/8	3/4	4
SPAW2220N1	4 1/2	14.961	3.740	4.331	1.654	12 3/8	2 3/8	8.976	7.283	6.890	1.024	–	1 5/8	7/8	2
FSPAW2220N1	4 1/2	14.961	3.740	4.331	1.654	12 3/8	2 3/8	8.976	7.283	6.890	–	0.866	1 5/8	3/4	4
SPAW2222N1	4 15/16	16.496	3.937	4.764	1.772	13 9/16	2 3/4	10.315	7.795	7.283	–	0.866	1 11/16	3/4	4
SPAW2222-315N1	4 15/16	16.496	3.937	4.764	1.772	13 9/16	2 3/4	10.315	7.795	7.283	–	0.866	1 11/16	3/4	4
SPAW2222-400N1	4 15/16	16.496	3.937	4.764	1.772	13 9/16	2 3/4	10.315	7.795	7.283	–	0.866	1 11/16	3/4	4
SPAW2224-403N1	5 1/4	16.496	4.134	4.764	1.496	13 7/8	2 3/4	10.512	7.992	7.480	–	0.866	1 3/8	3/4	4
SPAW2224-404N1	5 1/4	16.496	4.134	4.764	1.496	13 7/8	2 3/4	10.512	7.992	7.480	–	0.866	1 3/8	3/4	4
SPAW2224N1	5 1/4	16.496	4.134	4.764	1.496	13 7/8	2 3/4	10.512	7.992	7.480	–	0.866	1 3/8	3/4	4
SPAW2226-407N1	6	18.386	4.528	5.118	2.047	15 5/16	3 1/4	11.614	8.622	8.110	–	0.945	1 9/16	7/8	4
SPAW2226-408N1	6	18.386	4.528	5.118	2.047	15 5/16	3 1/4	11.614	8.622	8.110	–	0.945	1 9/16	7/8	4
SPAW2226N1	6	18.386	4.528	5.118	2.047	15 5/16	3 1/4	11.614	8.622	8.110	–	0.945	1 9/16	7/8	4
SPAW2228N1	6	20.118	4.724	5.866	2.047	16 9/16	3 3/8	12.087	9.134	8.622	–	1.024	1 9/16	1	4
SPAW2228-415N1	6	20.118	4.724	5.866	2.047	16 9/16	3 3/8	12.087	9.134	8.622	–	1.024	1 9/16	1	4
SPAW2228-500N1	6	20.118	4.724	5.866	2.047	16 9/16	3 3/8	12.087	9.134	8.622	–	1.024	1 9/16	1	4
SPAW2232-507N1	6 11/16	22.008	5.315	6.260	2.362	18 5/16	3 3/4	13.386	10.236	9.724	–	1.024	1 15/16	1	4
SPAW2232-508N1	6 11/16	22.008	5.315	6.260	2.362	18 5/16	3 3/4	13.386	10.236	9.724	–	1.024	1 15/16	1	4
SPAW2232N1	6 11/16	22.008	5.315	6.260	2.362	18 5/16	3 3/4	13.386	10.236	9.724	–	1.024	1 15/16	1	4

NTN

SFCW FLANGE BLOCKS

Units: Millimeters
INCHES

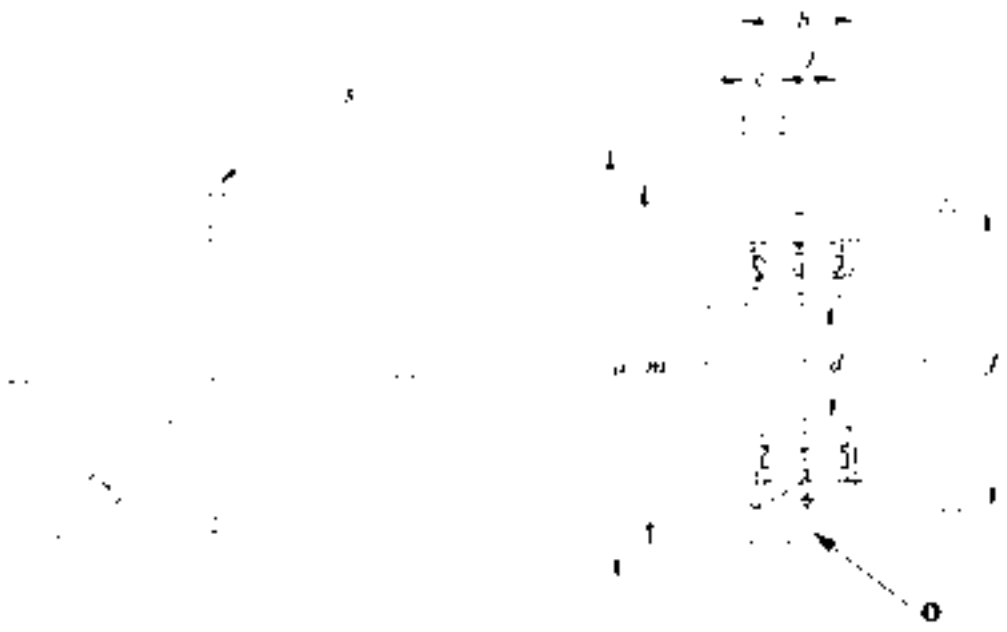

SFCW22...

SFCW FLANGE BLOCKS

Shaft Diameter *d* Inches	Complete Flange Block Number	Flange Block Housing	Bearing Number	Basic Load Ratings (lbs) *Dynamic C*	*Static C_0*	Adaptaer Locknut and Lockwasher	Weight (lbs)
1 15/16	SFCW2211-115N1	SFC211N1	MX-W22211BLLKC3	21,000	24,700	HA2311M1	19
50	SFCW2211N1	SFC211N1	MX-W22211BLLKC3	21,000	24,700	H2311XM1	19
2	SFCW2211-200N1	SFC211N1	MX-W22211BLLKC3	21,000	24,700	HE2311XYM1	19
2 3/16	SFCW2213-203N1	SFC213N1	MX-W22213BLLKC3	32,000	40,000	HA2313M1	23
2 1/4	SFCW2213-204N1	SFC213N1	MX-W22213BLLKC3	32,000	40,000	HE2313XM1	23
60	SFCW2213N1	SFC213N1	MX-W22213BLLKC3	32,000	40,000	H2313XM1	23
2 3/8	SFCW2213-206N1	SFC213N1	MX-W22213BLLKC3	32,000	40,000	HS2313XM1	23
2 7/16	SFCW2215-207N1	SFC215N1	MX-W22215BLLKC3	37,500	50,000	HA2315M1	27
2 1/8	SFCW2215-208N1	SFC215N1	MX-W22215BLLKC3	37,500	50,000	HE2315XM1	27
65	SFCW2215N1	SFC215N1	MX-W22215BLLKC3	37,500	50,000	H2315XM1	27
2 15/16	SFCW2217-216N1	SFC217N1	MX-W22217BLLKC3	46,500	61,000	HA2317XM1	34
75	SFCW2217N1	SFC217N1	MX-W22217BLLKC3	46,500	61,000	H2317XM1	34
3	SFCW2217-300N1	SFC217N1	MX-W22217BLLKC3	46,500	61,000	HE2317XM1	34
3 7/16	SFCW2220-307N1	SFC220N1	MX-W22220BLLKC3	69,500	92,000	HA2320M1	61
3 1/2	SFCW2220-308N1	SFC220N1	MX-W22220BLLKC3	69,500	92,000	HE2320XM1	61
90	SFCW2220N1	SFC220N1	MX-W22220BLLKC3	69,500	92,000	H2320XM1	61
100	SFCW2222N1	SFC222N1	MX-W22222BLLKC3	92,000	128,000	H2322XM1	82
3 15/16	SFCW2222-315N1	SFC222N1	MX-W22222BLLKC3	92,000	128,000	HA2322M1	82
4	SFCW2222-400N1	SFC222N1	MX-W22222BLLKC3	92,000	128,000	HE2322XM1	82
4 3/16	SFCW2224-403N1	SFC224N1	MX-W22224BLLKC3	109,000	157,000	HA2324M1	—
4 1/4	SFCW2224-404N1	SFC224N1	MX-W22224BLLKC3	109,000	157,000	HE2324M1	—
110	SFCW2224N1	SFC224N1	MX-W22224BLLKC3	109,000	157,000	H2324XM1	—
4 7/16	SFCW2226-407N1	SFC226N1	MX-W22226BLLKC3	127,000	176,000	HA2326M1	112
4 1/2	SFCW2226-408N1	SFC226N1	MX-W22226BLLKC3	127,000	176,000	HE2326M1	112
115	SFCW2226N1	SFC226N1	MX-W22226BLLKC3	127,000	176,000	H2326M1	112
125	SFCW2228N1	SFC228N1	MX-W22228BLLKC3	153,000	218,000	H2328M1	—
4 15/16	SFCW2228-415N1	SFC228N1	MX-W22228BLLKC3	153,000	218,000	HA2328M1	—
5	SFCW2228-500N1	SFC228N1	MX-W22228BLLKC3	153,000	218,000	HE2328M1	—
5 7/16	SFCW2232-507N1	SFC232N1	MX-W22232BLLKC3	196,000	290,000	HA2332M1	—
5 1/2	SFCW2232-508N1	SFC232N1	MX-W22232BLLKC3	196,000	290,000	HE2332M1	—
140	SFCW2232N1	SFC232N1	MX-W22232BLLKC3	196,000	290,000	H2332M1	—

C(M)-SFCW22...

How to Order

Example: When you order one SFCW2220N1, you will receive an assembly consisting of one SFC220N1 Flange Block Housing, one MX-W22220BLLKC3 Bearing, and one H2320XM1 Adapter.

When C-SFCW2220N1 or CM-SFCW2220N1 are specified, external covers will be supplied with the unit.

Example: “C” prefix - 1 taconite service seal (dimension *l*)

“CM” prefix - 1 end cover (dimension *l1*)

Notes: Taconite service seals for which dimensions are shown are standard. For dimensions and availability of non-standard taconite service seals, consult NTN Engineering.

All units are supplied in float arrangement and may be converted to fixed by relocation of a snap ring.

All bearing inserts are supplied prelubricated with Shell Alvania™ 3 grease.

Grease fittings are provided with all units.

SFCW FLANGE BLOCKS

Complete Flange Block Number	Dimensions (Millimeters)								
	a	*b*	*c*	*m*	*f*	*j*	*l*	*l1*	*s*
SFCW2211-115N1	200	62	19	165	130	25	91	85	14
SFCW2211N1	200	62	19	165	130	25	—	—	14
SFCW2211-200N1	200	62	19	165	130	25	—	—	14
SFCW2213-203N1	240	70	24	190	155	25	104	92	14
SFCW2213-204N1	240	70	24	190	155	25	—	—	14
SFCW2213N1	240	70	24	190	155	25	—	—	14
SFCW2213-206N1	240	70	24	190	155	25	—	—	14
SFCW2215-207N1	255	72	24	215	170	32	102	93	17
SFCW2215-208N1	255	72	24	215	170	32	—	—	17
SFCW2215N1	255	72	24	215	170	32	—	—	17
SFCW2217-216N1	270	80	27	240	190	32	118	108	17
SFCW2217N1	270	80	27	240	190	32	—	—	17
SFCW2217-300N1	270	80	27	240	190	32	—	—	17
SFCW2220-307N1	330	95	29	280	230	38	140	130	20
SFCW2220-308N1	330	95	29	280	230	38	—	—	20
SFCW2220N1	330	95	29	280	230	38	—	—	20
SFCW2222N1	365	100	32	310	255	42	—	—	20
SFCW2222-315N1	365	100	32	310	255	42	149	136	20
SFCW2222-400N1	365	100	32	310	255	42	—	—	20
SFCW2224-403N1	400	105	32	330	275	42	154	141	23
SFCW2224-404N1	400	105	32	330	275	42	—	—	23
SFCW2224N1	400	105	32	330	275	42	—	—	23
SFCW2226-407N1	416	115	32	355	290	42	167	154	23
SFCW2226-408N1	416	115	32	355	290	42	—	—	23
SFCW2226N1	416	115	32	355	290	42	—	—	23
SFCW2228N1	450	120	45	385	310	56	—	—	35
SFCW2228-415N1	450	120	45	385	310	56	174	163	35
SFCW2228-500N1	450	120	45	385	310	56	—	—	35
SFCW2232-507N1	520	135	45	435	360	65	195	185	35
SFCW2232-508N1	520	135	45	435	360	65	—	—	35
SFCW2232N1	520	135	45	435	360	65	—	—	35

SERIES
SAF 225
SAF 226

ADAPTER MOUNTING

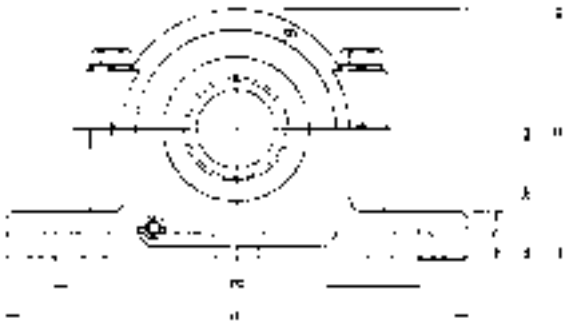

SAF PILLOW BLOCKS

Shaft Diameter d_1 Inches	Complete Pillow Block Number	PILLOW BLOCK COMPONENT NUMBERS						
		Pillow Block Housing	Bearing Number	Basic Load Ratings (lbs) *Dynamic* C	Basic Load Ratings (lbs) *Static* C_o	Adapter Locknut and Lockwasher	Triple Seal Ring (2 required)	Stabilizing Ring (1 required)
1 7/16	SAF22509	SAF509	22209CKD1	18,600	21,400	SNW09	LER17	SR 85X6
1 11/16	SAF22510	SAF510	22210CKD1	19,300	23,000	SNW10	LER20	SR 90X6.5
1 15/16	SAF22511	SAF511	22211BKD1	21,000	24,700	SNW11	LER24	SR100X6
2 3/16	SAF22513	SAF513	22213BKD1	32,000	40,500	SNW13	LER29	SR120X10
2 7/16	SAF22515	SAF515	22215BKD1	37,000	50,000	SNW15	LER37	SR130X10
2 11/16	SAF22516	SAF516	22216BKD1	40,500	53,500	SNW16	LER44	SR140X10
2 15/16	SAF22517	SAF517	22217BKD1	46,500	61,500	SNW17	LER53	SR150X10
3 3/16	SAF22518	SAF518	22218BKD1	57,500	77,500	SNW18	LER69	SR160X10
3 7/16	SAF22520	SAF520	22220BKD1	70,000	92,500	SNW20	LER102	SR180X10
3 15/16	SAF22522	SAF522	22222BKD1	92,500	128,000	SNW22	LER109	SR200X10
4 3/16	SAF22524	SAF524	22224BKD1	109,000	158,000	SNW24	LER113	SR215X10
4 7/16	SAF22526	SAF526	22226BKD1	127,000	176,000	SNW26	LER117	SR230X10
4 15/16	SAF22528	SAF528	22228BKD1	153,000	218,000	SNW28	LER122	SR250X10
5 3/16	SAF22530	SAF530	22230BKD1	174,000	262,000	SNW30	LER125	SR270X10
5 7/16	SAF22532	SAF532	22232BKD1	195,000	290,000	SNW32	LER130	SR290X10
5 15/16	SAF22534	SAF534	22234BKD1	225,000	340,000	SNW34	LER140	SR310X10
6 7/16	SAF22536	SAF536	22236BK	233,000	360,000	SNW36	LER148	SR320X10
6 15/16	SAF22538	SAF538	22238BK	260,000	410,000	SNW38	LER155	SR340X10
7 3/16	SAF22540	SAF540	22240BK	295,000	450,000	SNW40	LER159	SR360X10
7 15/16	SAF22544	SAF544	22244BK	350,000	545,000	SNW44	LER167	SR400X10

SAF PILLOW BLOCKS

Shaft Diameter d_1 Inches	Complete Pillow Block Number	PILLOW BLOCK COMPONENT NUMBERS						
		Pillow Block Housing	Bearing Number	Basic Load Ratings (lbs) *Dynamic* C	Basic Load Ratings (lbs) *Static* C_o	Adapter Locknut and Lockwasher	Triple Seal Ring (2 required)	Stabilizing Ring (1 required)
1 7/16	SAF22609	SAF609	22309CKD1	33,000	37,500	SNW109	LER17	SR100X6
1 11/16	SAF22610	SAF610	22310CKD1	42,000	47,500	SNW110	LER20	SR110X8
1 15/16	SAF22611	SAF611	22311BKD1	46,000	52,500	SNW111	LER24	SR120X10
2 3/16	SAF22613	SAF613	22313BKD1	59,500	71,000	SNW113	LER32	SR140X8.5
2 7/16	SAF22615	SAF615	22315BKD1	74,000	92,000	SNW115	LER37	SR160X10
2 11/16	SAF22616	SAF616	22316BKD1	86,000	105,000	SNW116	LER44	SR170X10
2 15/16	SAF22617	SAF617	22317BKD1	93,500	115,000	SNW117	LER184	SR180X10
3 3/16	SAF22618	SAF618	22318BKD1	107,000	132,000	SNW118	LER188	SR190X9.5
3 7/16	SAF22620	SAF620	22320BKD1	136,000	169,000	SNW120	LER102	SR215X9.5
3 15/16	SAF22622	SAF622	22322BKD1	167,000	209,000	SNW122	LER109	SR240X9.5
4 3/16	SAF22624	SAF624	22324BKD1	198,000	252,000	SNW124	LER113	SR260X9.5
4 7/16	SAF22626	SAF626	22326BKD1	221,000	282,000	SNW126	LER117	SR280X9.5
4 15/16	SAF22628	SAF628	22328BKD1	250,000	320,000	SNW128	LER122	SR300X9.5
5 3/16	SAF22630	SAF630	22330BK	281,000	385,000	SNW130	LER125	SR320X9.5
5 7/16	SAF22632	SAF632	22332BK	315,000	440,000	SNW132	LER130	SR340X9.5
5 15/16	SAF22634	SAF634	22334BK	340,000	480,000	SNW134	LER140	SR360X10
6 7/16	SAF22636	SAF636	22336BK	385,000	565,000	SNW136	LER148	SR380X10
6 15/16	SAF22638	SAF638	22338BK	415,000	615,000	SNW138	LER155	SR400X10

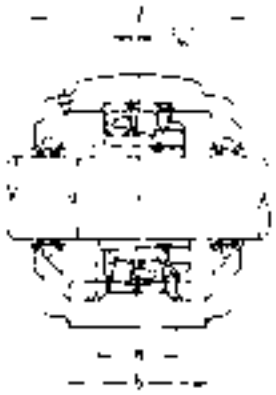

HOW TO ORDER

Example: When you order one SAF22520, you will receive a package containing one SAF520 Pillow Block Housing, one No. 22220BKD1 Bearing and one SNW20 Adapter. All units are supplied with two Triple Seal Rings and a Stabilizing Ring. If you specify SAF22520M3, the required end cover will be included. Always specify shaft size. The same example applies when you order SAF22620.

A pillow block housing number includes one housing and two triple seal rings automatically. Suffix G on a pillow block housing number means one stabilizing ring is also included.

NOTE: For cast steel pillow blocks in 22500(22200) Series (SAFS), see pages 150 and 151.

SAF PILLOW BLOCKS

Complete Pillow Block Number	Dimensions (Inches)									Set Bolts	
	h	*a*	*b*	*c*	*m* max.	*m* min.	*n*	*w*	*l*	Size	Number
SAF22509	2 1/4	8 1/4	2 3/8	13/16	7	6 1/4	—	4 3/8	3 5/8	1/2	2
SAF22510	2 1/2	8 1/4	2 3/8	15/16	7	6 1/2	—	4 3/4	3 5/8	1/2	2
SAF22511	2 3/4	9 5/8	2 3/4	15/16	7 7/8	7 3/8	—	5 1/4	3 7/8	5/8	2
SAF22513	3	11	3 1/8	1	9 1/2	8 1/8	—	5 15/16	4 1/2	5/8	2
SAF22515	3 1/4	11 1/4	3 1/8	1 1/8	9 5/8	8 5/8	—	6 3/8	4 3/4	5/8	2
SAF22516	3 1/2	13	3 1/2	1 3/16	11	9 5/8	—	6 7/8	4 7/8	3/4	2
SAF22517	3 3/4	13	3 1/2	1 1/4	11	9 7/8	—	7 5/16	5	3/4	2
SAF22518	4	13 3/4	3 7/8	1 5/16	11 5/8	10 3/8	—	7 3/4	5 3/4	3/4	2
SAF22520	4 1/2	15 1/4	4 3/8	1 3/4	13 1/8	11 5/8	—	8 3/4	6	7/8	2
SAF22522	4 15/16	16 1/2	4 3/4	2	14 1/2	12 5/8	2 3/4	9 5/8	6 1/2	3/4	4
SAF22524	5 1/4	16 1/2	4 3/4	2 1/8	14 1/2	13 1/4	2 3/4	10 1/4	7 3/8	3/4	4
SAF22526	6	18 3/8	5 1/8	2 3/8	16	14 5/8	3 1/4	11 1/2	8	7/8	4
SAF22528	6	20 1/8	5 7/8	2 3/8	17 1/8	16	3 3/8	11 3/4	7 5/8	1	4
SAF22530	6 5/16	21 1/4	6 1/4	2 1/2	18 1/4	17	3 3/4	12 1/2	8 3/8	1	4
SAF22532	6 11/16	22	6 1/4	2 5/8	19 1/4	17 3/8	3 3/4	13 5/16	8 3/4	1	4
SAF22534	7 1/16	24 3/4	6 3/4	2 3/4	21 5/8	19 3/8	4 1/4	14 3/16	9 5/8	1	4
SAF22536	7 1/2	26 3/4	7 1/8	3	23 5/8	20 7/8	4 5/8	14 7/8	10	1	4
SAF22538	7 7/8	28	7 1/2	3 1/8	24 3/8	21 5/8	4 1/2	15 11/16	10 3/4	1 1/4	4
SAF22540	8 1/4	29 1/2	8	3 3/8	25	22 1/2	5	16 1/2	11 1/4	1 1/4	4
SAF22544	9 1/2	32 3/4	8 3/4	3 3/4	27 7/8	24 3/4	5 1/4	18 5/8	12	1 1/2	4

SAF PILLOW BLOCKS

Complete Pillow Block Number	Dimensions (Inches)									Set Bolts	
	h	*a*	*b*	*c*	*m* max.	*m* min.	*n*	*w*	*l*	Size	Number
SAF22609	2 3/4	9 5/8	2 3/4	1	7 7/8	7 3/8	—	5 5/16	4 1/4	5/8	2
SAF22610	3	10 5/8	2 3/4	1 1/8	9	7 3/4	—	5 13/16	4 5/8	5/8	2
SAF22611	3 1/4	11	3 1/8	1 3/16	9 1/2	8 1/8	—	6 3/16	4 7/8	5/8	2
SAF22613	3 1/2	13	3 1/2	1 1/4	11	9 5/8	—	6 15/16	5 3/8	3/4	2
SAF22615	4	13 3/4	3 7/8	1 5/16	11 5/8	10 3/8	—	7 13/16	6 1/4	3/4	2
SAF22616	4 1/4	14 1/4	3 7/8	1 5/16	12 5/8	10 5/8	—	8 1/4	6 1/2	3/4	2
SAF22617	4 1/2	15 1/4	4 3/8	1 3/4	13 1/8	11 5/8	—	8 3/4	6 3/4	7/8	2
SAF22618	4 3/4	15 1/2	4 3/8	2	13 1/2	12	2 1/4	9 3/16	6 7/8	3/4	4
SAF22620	5 1/4	16 1/2	4 3/4	2 1/8	14 1/2	13 1/4	2 3/4	10 1/4	7 3/8	3/4	4
SAF22622	6	18 3/8	5 1/8	2 3/8	16	14 5/8	3 1/4	11 1/2	8	7/8	4
SAF22624	6 5/16	21 1/4	6 1/4	2 1/2	18 1/4	17	3 3/4	12 1/2	8 3/8	1	4
SAF22626	6 11/16	22	6 1/4	2 5/8	19 1/4	17 3/8	3 3/4	13 5/16	8 3/4	1	4
SAF22628	7 1/16	24 3/4	6 3/4	2 3/4	21 5/8	19 3/8	4 1/4	14 3/16	9 3/8	1	4
SAF22630	7 1/2	26 3/4	7 1/8	3	23 5/8	20 7/8	4 5/8	14 7/8	9 3/4	1	4
SAF22632	7 7/8	28	7 1/2	3 1/8	24 3/8	21 5/8	4 1/2	15 11/16	10 5/8	1 1/4	4
SAF22634	8 1/4	29 1/2	8	3 3/8	25	22 1/2	5	16 1/2	11 1/4	1 1/4	4
SAF22636	8 7/8	31 1/4	8 1/4	3 1/2	26 5/8	24	5 1/4	17 3/4	11 3/8	1 1/4	4
SAF22638	9 1/2	32 3/4	8 3/4	3 3/4	27 7/8	24 3/4	5 1/4	18 5/8	12	1 1/2	4

SERIES SAF222 SAF223

CYLINDRICAL BORE MOUNTING

Units: Millimeters
INCHES

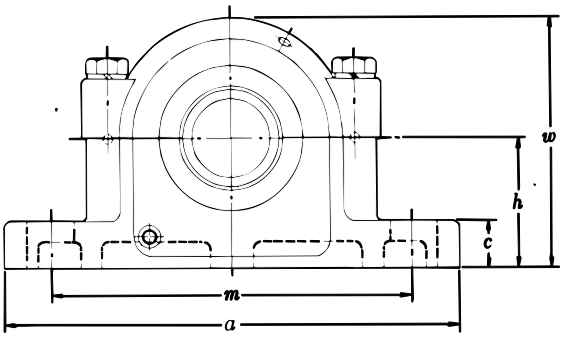

SAF PILLOW BLOCKS

Shaft Diameter Inches d_2	Shaft Diameter Inches d_1	Complete Pillow Block Number	PILLOW BLOCK COMPONENT NUMBERS: Pillow Block Housing	Bearing Number	Basic Load Ratings (lbs) Dynamic C	Basic Load Ratings (lbs) Static C_o	Locknut	Lock-washer	Triple Seal Ring d_2 Shaft (1 req'd)	Triple Seal Ring d_1 Shaft (1 req'd)	Stabilizing Ring (1 required)
3 5/8	3	SAF22216	SAF216	22216BD1	40,500	53,500	AN16A	W16	LER82	LER54	SR140X10
3 15/16	3 3/16	SAF22217	SAF217	22217BD1	46,500	61,500	AN17A	W17	LER89	LER63	SR150X10
4 1/8	3 3/8	SAF22218	SAF218	22218BD1	57,500	77,500	AN18A	W18	LER96	LER72	SR160X10
4 1/2	3 13/16	SAF22220	SAF220	22220BD1	70,000	92,500	AN20A	W20	LER118	LER106	SR180X10
4 7/8	4 3/16	SAF22222	SAF222	22222BD1	92,500	128,000	AN22A	W22	LER121	LER113	SR200X10
5 5/16	4 9/16	SAF22224	SAF224	22224BD1	109,000	158,000	AN24A	W24	LER127	LER119	SR215X10
5 7/8	4 15/16	SAF22226	SAF226	22226BD1	127,000	176,000	AN26A	W26	LER136	LER122	SR230X10
6 1/4	5 5/16	SAF22228	SAF228	22228BD1	153,000	218,000	AN28A	W28	LER144	LER127	SR250X10
6 5/8	5 3/4	SAF22230	SAF230	22230BD1	174,000	262,000	AN30A	W30	LER151	LER134	SR270X10
7	6 1/16	SAF22232	SAF232	22232BD1	195,000	290,000	AN32A	W32	LER156	LER142	SR290X10
7 7/16	6 7/16	SAF22234	SAF234	22234BD1	225,000	340,000	AN34A	W34	LER161	LER148	SR310X10
7 13/16	6 7/8	SAF22236	SAF236	22236B	233,000	360,000	AN36A	W36	LER165	LER154	SR320X10
8 3/8	7 1/4	SAF22238	SAF238	22238B	260,000	410,000	AN38A	W38	LER171	LER160	SR340X10
8 3/4	7 5/8	SAF22240	SAF240	22240B	295,000	450,000	AN40A	W40	LER175	LER164	SR360X10
9 9/16	8 5/16	SAF22244	SAF244	22244B	350,000	545,000	N44	W44	LER179	LER170	SR400X10

SAF PILLOW BLOCKS

Shaft Diameter Inches d_2	Shaft Diameter Inches d_1	Complete Pillow Block Number	PILLOW BLOCK COMPONENT NUMBERS: Pillow Block Housing	Bearing Number	Basic Load Ratings (lbs) Dynamic C	Basic Load Ratings (lbs) Static C_o	Locknut	Lock-washer	Triple Seal Ring d_2 Shaft (1 req'd)	Triple Seal Ring d_1 Shaft (1 req'd)	Stabilizing Ring (1 required)
1 15/16	1 7/16	SAF22308	SAF308	22308CD1	27,200	28,800	N08	W08	LER24	LER17	SR 90X6.5
2 1/8	1 11/16	SAF22309	SAF309	22309CD1	33,000	37,500	N09	W09	LER28	LER20	SR100X6
2 3/8	1 7/8	SAF22310	SAF310	22310CD1	42,000	47,500	N10	W10	LER35	LER23	SR110X8
2 9/16	2 1/16	SAF22311	SAF311	22311BD1	46,000	52,500	N11	W11	LER40	LER27	SR120X10
2 7/8	2 1/4	SAF22312	SAF312	22312BD1	53,000	60,500	N12	W12	LER47	LER33	SR130X10
3 1/16	2 7/16	SAF22313	SAF313	22313BD1	59,500	71,000	N13	W13	LER55	LER37	SR140X8.5
3 1/4	2 5/8	SAF22314	SAF314	22314BD1	72,500	85,000	N14	W14	LER64	LER43	SR150X10
3 7/16	2 13/16	SAF22315	SAF315	22315BD1	74,000	92,000	AN15A	W15	LER79	LER46	SR160X10
3 5/8	3	SAF22316	SAF316	22316BD1	86,000	105,000	AN16A	W16	LER84	LER60	SR170X10
3 15/16	3 3/16	SAF22317	SAF317	22317BD1	93,500	115,000	AN17A	W17	LER109	LER188	SR180X10
4 1/8	3 3/8	SAF22318	SAF318	22318BD1	107,000	132,000	AN18A	W18	LER112	LER191	SR190X9.5
4 1/2	3 13/16	SAF22320	SAF320	22320BD1	136,000	169,000	AN20A	W20	LER118	LER106	SR215X9.5
4 7/8	4 3/16	SAF22322	SAF322	22322BD1	167,000	209,000	AN22A	W22	LER121	LER113	SR240X9.5
5 5/16	4 9/16	SAF22324	SAF324	22324BD1	198,000	252,000	AN24A	W24	LER127	LER119	SR260X9.5
5 7/8	4 15/16	SAF22326	SAF326	22326BD1	221,000	282,000	AN26A	W26	LER136	LER122	SR280X9.5
6 1/4	5 5/16	SAF22328	SAF328	22328BD1	250,000	320,000	AN28A	W28	LER144	LER127	SR300X9.5
6 5/8	5 3/4	SAF22330	SAF330	22330B	281,000	385,000	AN30A	W30	LER151	LER134	SR320X9.5
7	6 1/16	SAF22332	SAF332	22332B	315,000	440,000	AN32A	W32	LER156	LER142	SR340X9.5
7 7/16	6 7/16	SAF22334	SAF334	22334B	340,000	480,000	AN34A	W34	LER161	LER148	SR360X10
7 13/16	6 7/8	SAF22336	SAF336	22336B	385,000	565,000	AN36A	W36	LER165	LER154	SR380X10
8 3/8	7 1/4	SAF22338	SAF338	22338B	415,000	615,000	AN38A	W38	LER171	LER160	SR400X10

Units: Millimeters
INCHES

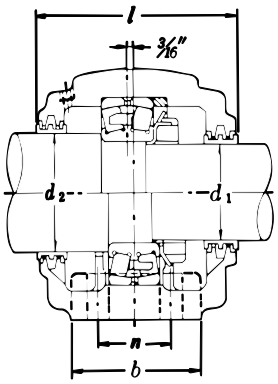

HOW TO ORDER

Example: When you order one SAF22220, you will receive a package containing one SAF220 Pillow Block Housing, one No. 22220BD1 Bearing, one No. AN20A Locknut and one No. W20 Lockwasher. All units are supplied with two Triple Seal Rings and a Stabilizing Ring. If you specify SAF22220M3, the required end cover will be included. Always specify shaft size. The same example applies when you order SAF22320.

A pillow block housing number includes one housing and two triple seal rings automatically. Suffix G on a pillow block housing number means one stabilizing ring is also included.

SAF PILLOW BLOCKS

Complete Pillow Block Number	Dimensions (Inches)									Set Bolts	
	h	*a*	*b*	*c*	*m* max.	*m* min.	*n*	*w*	*l*	Size	Number
SAF22216	3 1/2	13	3 1/2	1 1/4	11	9 5/8	—	6 15/16	5 3/8	3/4	2
SAF22217	3 3/4	13	3 1/2	1 1/4	11	9 7/8	—	7 3/8	5 3/8	3/4	2
SAF22218	4	13 3/4	3 7/8	1 5/16	11 5/8	10 3/8	—	7 13/16	6 1/4	3/4	2
SAF22220	4 1/2	15 1/4	4 3/8	1 3/4	13 1/8	11 5/8	—	8 3/4	6	7/8	2
SAF22222	4 15/16	16 1/2	4 3/4	2	14 1/2	12 5/8	2 3/4	9 5/8	6 1/2	3/4	4
SAF22224	5 1/4	16 1/2	4 3/4	2 1/8	14 1/2	13 1/4	2 3/4	10 1/4	7 3/8	3/4	4
SAF22226	6	18 3/8	5 1/8	2 3/8	16	14 5/8	3 1/4	11 1/2	8	7/8	4
SAF22228	6	20 1/8	5 7/8	2 3/8	17 1/8	16	3 3/8	11 3/4	7 5/8	1	4
SAF22230	6 5/16	21 1/4	6 1/4	2 1/2	18 1/4	17	3 3/4	12 1/2	8 3/8	1	4
SAF22232	6 11/16	22	6 1/4	2 5/8	19 1/4	17 3/8	3 3/4	13 5/16	8 3/4	1	4
SAF22234	7 1/16	24 3/4	6 3/4	2 3/4	21 5/8	19 3/8	4 1/4	14 9/16	9 5/8	1	4
SAF22236	7 1/2	26 3/4	7 1/8	3	23 5/8	20 7/8	4 5/8	14 7/8	10	1	4
SAF22238	7 7/8	28	7 1/2	3 1/8	24 3/8	21 5/8	4 1/2	15 11/16	10 3/4	1 1/4	4
SAF22240	8 1/4	29 1/2	8	3 3/8	25	22 1/2	5	16 1/2	11 1/4	1 1/4	4
SAF22244	9 1/2	32 3/4	8 3/4	3 3/4	27 7/8	24 3/4	5 1/4	18 5/8	12	1 1/2	4

SAF PILLOW BLOCKS

Complete Pillow Block Number	Dimensions (Inches)									Set Bolts	
	h	*a*	*b*	*c*	*m* max.	*m* min.	*n*	*w*	*l*	Size	Number
SAF22308	2 1/2	8 1/4	2 3/8	1	7	6 1/2	—	4 13/16	4	1/2	2
SAF22309	2 3/4	9 5/8	2 3/4	1	7 7/8	7 3/8	—	5 5/16	4 1/4	5/8	2
SAF22310	3	10 5/8	2 3/4	1 1/8	9	7 3/4	—	5 13/16	4 5/8	5/8	2
SAF22311	3 1/4	11	3 1/8	1 3/16	9 1/2	8 1/8	—	6 3/16	5	5/8	2
SAF22312	3 1/4	11 1/4	3 1/8	1 3/16	9 5/8	8 5/8	—	6 3/8	5 1/4	5/8	2
SAF22313	3 1/2	13	3 1/2	1 1/4	11	9 5/8	—	6 15/16	5 3/8	3/4	2
SAF22314	3 3/4	13	3 1/2	1 1/4	11	9 7/8	—	7 3/8	5 3/8	3/4	2
SAF22315	4	13 3/4	3 7/8	1 5/16	11 5/8	10 3/8	—	7 13/16	6 1/4	3/4	2
SAF22316	4 1/4	14 1/4	3 7/8	1 5/16	12 5/8	10 5/8	—	8 1/4	6 1/2	3/4	2
SAF22317	4 1/2	15 1/4	4 3/8	1 3/4	13 1/8	11 5/8	—	8 3/4	6 3/4	7/8	2
SAF22318	4 3/4	15 1/2	4 3/8	2	13 1/2	12	2 1/4	9 3/16	6 7/8	3/4	4
SAF22320	5 1/4	16 1/2	4 3/4	2 1/8	14 1/2	13 1/4	2 3/4	10 1/4	7 3/8	3/4	4
SAF22322	6	18 3/8	5 1/8	2 3/8	16	14 5/8	3 1/4	11 1/2	8	7/8	4
SAF22324	6 5/16	21 1/4	6 1/4	2 1/2	18 1/4	17	3 3/4	12 1/2	8 3/8	1	4
SAF22326	6 11/16	22	6 1/4	2 5/8	19 1/4	17 3/8	3 3/4	13 5/16	8 3/4	1	4
SAF22328	7 1/16	24 3/4	6 3/4	2 3/4	21 5/8	19 3/8	4 1/4	14 9/16	9 3/8	1	4
SAF22330	7 1/2	26 3/4	7 1/8	3	23 5/8	20 7/8	4 5/8	14 7/8	9 3/4	1	4
SAF22332	7 7/8	28	7 1/2	3 1/8	24 3/8	21 5/8	4 1/2	15 11/16	10 3/4	1 1/4	4
SAF22334	8 1/4	29 1/2	8	3 3/8	25	22 1/2	5	16 1/2	11 1/4	1 1/4	4
SAF22336	8 7/8	31 1/4	8 1/4	3 5/8	26 5/8	24	5 1/4	18 1/2	11 1/4	1 1/4	4
SAF22338	9 1/2	32 3/4	8 3/4	3 3/4	27 7/8	24 3/4	5 1/4	18 5/8	12	1 1/2	4

SERIES SAFS225 ADAPTER MOUNTING

SAFS222 CYLINDRICAL BORE MOUNTING

Units: Millimeters
INCHES

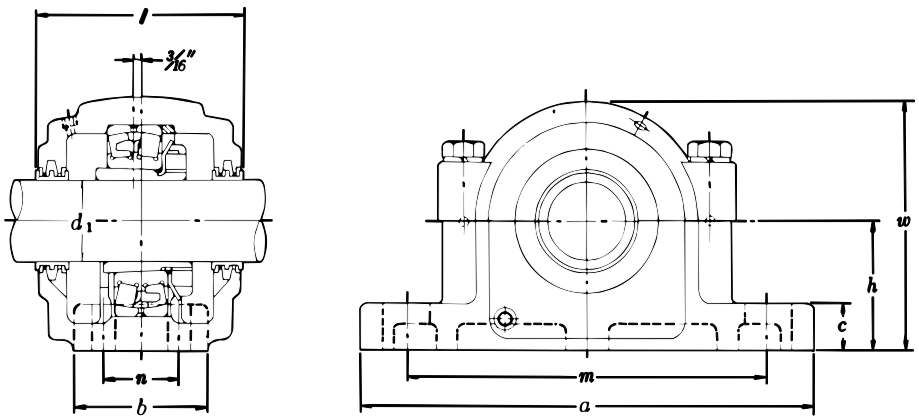

SAFS 225

SAFS PILLOW BLOCKS

Shaft Diameter d_1 Inches	Complete Pillow Block Number	PILLOW BLOCK COMPONENT NUMBERS: Pillow Block Housing	Bearing Number	Basic Load Ratings (lbs) Dynamic C	Basic Load Ratings (lbs) Static C_o	Adapter Locknut and Lockwasher	Triple Seal Ring (2 required)	Stabilizing Ring (1 required)
1 7/16	SAFS22509	SAFS509	22209CKD1	18,600	21,400	SNW09	LER17	SR 85X6
1 11/16	SAFS22510	SAFS510	22210CKD1	19,300	23,000	SNW10	LER20	SR 90X6.5
1 15/16	SAFS22511	SAFS511	22211BKD1	21,000	24,700	SNW11	LER24	SR100X6
2 3/16	SAFS22513	SAFS513	22213BKD1	32,000	40,500	SNW13	LER29	SR120X10
2 7/16	SAFS22515	SAFS515	22215BKD1	37,000	50,000	SNW15	LER37	SR130X10
2 11/16	SAFS22516	SAFS516	22216BKD1	40,500	53,500	SNW16	LER44	SR140X10
2 15/16	SAFS22517	SAFS517	22217BKD1	46,500	61,500	SNW17	LER53	SR150X10
3 3/16	SAFS22518	SAFS518	22218BKD1	57,500	77,500	SNW18	LER69	SR160X10
3 7/16	SAFS22520	SAFS520	22220BKD1	70,000	92,500	SNW20	LER75	SR180X10
3 15/16	SAFS22522	SAFS522	22222BKD1	92,500	128,000	SNW22	LER93	SR200X10
4 3/16	SAFS22524	SAFS524	22224BKD1	109,000	158,000	SNW24	LER113	SR215X10
4 7/16	SAFS22526	SAFS526	22226BKD1	127,000	176,000	SNW26	LER117	SR230X10
4 15/16	SAFS22528	SAFS528	22228BKD1	153,000	218,000	SNW28	LER122	SR250X10
5 3/16	SAFS22530	SAFS530	22230BKD1	174,000	262,000	SNW30	LER125	SR270X10
5 7/16	SAFS22532	SAFS532	22232BKD1	195,000	290,000	SNW32	LER130	SR290X10
5 15/16	SAFS22534	SAFS534	22234BKD1	225,000	340,000	SNW34	LER140	SR310X10
6 7/16	SAFS22536	SAFS536	22236BK	233,000	360,000	SNW36	LER148	SR320X10
6 15/16	SAFS22538	SAFS538	22238BK	260,000	410,000	SNW38	LER224	SR340X10
7 3/16	SAFS22540	SAFS540	22240BK	295,000	450,000	SNW40	LER228	SR360X10
7 15/16	SAFS22544	SAFS544	22244BK	350,000	545,000	SNW44	LER236	SR400X10

SAFS PILLOW BLOCKS

Shaft Diameter Inches d_2	Shaft Diameter Inches d_1	Complete Pillow Block Number	PILLOW BLOCK COMPONENT NUMBERS: Pillow Block Housing	Bearing Number	Basic Load Ratings (lbs) Dynamic C	Basic Load Ratings (lbs) Static C_o	Locknut	Lock-washer	Triple Seal Ring d_2 Shaft (1 req'd)	Triple Seal Ring d_1 Shaft (1 req'd)	Stabilizing Ring (1 required)
3 5/8	3	SAFS22216	SAFS216	22216BD1	40,500	53,500	AN16A	W16	LER 82	LER 54	SR140X10
3 15/16	3 3/16	SAFS22217	SAFS217	22217BD1	46,500	61,500	AN17A	W17	LER89	LER 63	SR150X10
4 1/8	3 3/8	SAFS22218	SAFS218	22218BD1	57,500	77,500	AN18A	W18	LER96	LER 72	SR160X10
4 1/2	3 13/16	SAFS22220	SAFS220	22220BD1	70,000	92,500	AN20A	W20	LER205	LER 87	SR180X10
4 7/8	4 3/16	SAFS22222	SAFS222	22222BD1	92,500	128,000	AN22A	W22	LER121	LER113	SR200X10
5 5/16	4 9/16	SAFS22224	SAFS224	22224BD1	109,000	158,000	AN24A	W24	LER127	LER119	SR215X10
5 7/8	4 15/16	SAFS22226	SAFS226	22226BD1	127,000	176,000	AN26A	W26	LER136	LER122	SR230X10
6 1/4	5 5/16	SAFS22228	SAFS228	22228BD1	153,000	218,000	AN28A	W28	LER144	LER127	SR250X10
6 5/8	5 3/4	SAFS22230	SAFS230	22230BD1	174,000	262,000	AN30A	W30	LER151	LER134	SR270X10
7	6 1/16	SAFS22232	SAFS232	22232BD1	195,000	290,000	AN32A	W32	LER156	LER142	SR290X10
7 7/16	6 7/16	SAFS22234	SAFS234	22234BD1	225,000	340,000	AN34A	W34	LER161	LER148	SR310X10
7 13/16	6 7/8	SAFS22236	SAFS236	22236B	233,000	360,000	AN36A	W36	LER165	LER154	SR320X10
8 3/8	7 1/4	SAFS22238	SAFS238	22238B	260,000	410,000	AN38A	W38	LER240	LER229	SR340X10
8 3/4	7 5/8	SAFS22240	SAFS240	22240B	295,000	450,000	AN40A	W40	LER244	LER233	SR360X10
9 9/16	8 5/16	SAFS22244	SAFS244	22244B	350,000	545,000	N44	W44	LER248	LER239	SR400X10

HOW TO ORDER

Units: Millimeters
INCHES

Example No. 1: When you order one SAFS22520, you will receive a package containing one SAFS520 Pillow Block Housing, one No. 22220BKD1 Bearing and one SNW20 Adapter.

Example No. 2: When you order one SAFS22220, you will receive a package containing one SAFS220 Pillow Block Housing, one No. 22220BD1 Bearing, one No. AN20A Locknut and one No. W20 Lockwasher.

For both of the above examples:
All units are supplied with two Triple Seal Rings and a Stabilizing Ring. If you specify SAFS22520M3, the required end cover will be included. Always specify shaft size.

A pillow block housing number includes one housing and two triple seal rings automatically. Suffix G on a pillow block housing number means one stabilizing ring is also included.

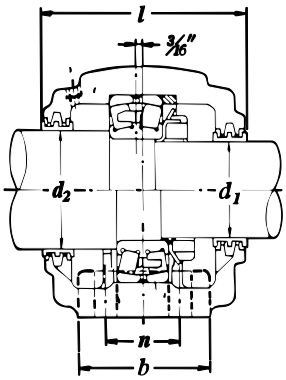

SAFS 222

NTN

SERIES SAFS225 ADAPTER MOUNTING

SAFS222 CYLINDRICAL BORE MOUNTING

SAFS PILLOW BLOCKS

Complete Pillow Block Number	Dimensions (Inches)									Set Bolts	
	h	*a*	*b*	*c*	*m* max.	*m* min.	*n*	*w*	*l*	Size	Number
SAFS22509	2 1/4	8 1/4	2 3/8	7/8	7	6 1/4	—	4 7/16	3 5/8	1/2	2
SAFS22510	2 1/2	8 1/4	2 3/8	1	7	6 1/2	—	4 13/16	4	1/2	2
SAFS22511	2 3/4	9 5/8	2 3/4	1	7 7/8	7 3/8	—	5 5/16	4 1/4	5/8	2
SAFS22513	3	11	3 1/8	1	9 1/2	8 1/8	—	5 15/16	5	5/8	2
SAFS22515	3 1/4	11 1/4	3 1/8	1 3/16	9 5/8	8 5/8	—	6 3/8	5 1/4	5/8	2
SAFS22516	3 1/2	13	3 1/2	1 1/4	11	9 5/8	—	6 15/16	5 3/8	3/4	2
SAFS22517	3 3/4	13	3 1/2	1 1/4	11	9 7/8	—	7 3/8	5 3/8	3/4	2
SAFS22518	4	13 3/4	3 7/8	1 5/16	11 5/8	10 3/8	—	7 13/16	6 1/4	3/4	2
SAFS22520	4 1/2	15 1/4	4 3/8	1 1/2	13 1/8	11 5/8	—	8 7/8	6 3/4	7/8	2
SAFS22522	4 15/16	16 1/2	4 3/4	1 5/8	14 1/2	12 5/8	2 3/4	9 11/16	7 1/4	3/4	4
SAFS22524	5 1/4	16 1/2	4 3/4	1 3/4	14 1/2	13 1/4	2 3/4	10 1/4	7 3/8	3/4	4
SAFS22526	6	18 3/8	5 1/8	1 7/8	16	14 5/8	3 1/4	11 9/16	8	7/8	4
SAFS22528	6	20 1/8	5 7/8	1 15/16	17 1/8	16	3 3/8	12	7 5/8	1	4
SAFS22530	6 5/16	21 1/4	6 1/4	2	18 1/4	17	3 3/4	12 11/16	8 3/8	1	4
SAFS22532	6 11/16	22	6 1/4	2	19 1/4	17 3/8	3 3/4	13 9/16	8 3/4	1	4
SAFS22534	7 1/16	24 3/4	6 3/4	2 1/8	21 5/8	19 3/8	4 1/4	14 9/16	9 5/8	1	4
SAFS22536	7 1/2	26 3/4	7 1/8	2 1/8	23 5/8	20 7/8	4 5/8	15 5/16	10	1	4
SAFS22538	7 7/8	28	7 1/2	2 3/8	24 3/8	21 5/8	4 1/2	16 3/16	10 5/8	1 1/4	4
SAFS22540	8 1/4	29 1/2	8	2 3/8	25	22 1/2	5	17 3/16	11 1/8	1 1/4	4
SAFS22544	9 1/2	32 3/4	8 3/4	2 3/4	27 7/8	24 3/4	5 1/4	19 7/16	11 7/8	1 1/2	4

SAFS PILLOW BLOCKS

Complete Pillow Block Number	Dimensions (Inches)									Set Bolts	
	h	*a*	*b*	*c*	*m* max.	*m* min.	*n*	*w*	*l*	Size	Number
SAFS22216	3 1/2	13	3 1/2	1 1/4	11	9 5/8	—	6 15/16	5 3/8	3/4	2
SAFS22217	3 3/4	13	3 1/2	1 1/4	11	9 7/8	—	7 3/8	5 3/8	3/4	2
SAFS22218	4	13 3/4	3 7/8	1 5/16	11 5/8	10 3/8	—	7 13/16	6 1/4	3/4	2
SAFS22220	4 1/2	15 1/4	4 3/8	1 1/2	13 1/8	11 5/8	—	8 7/8	6 3/4	7/8	2
SAFS22222	4 15/16	16 1/2	4 3/4	1 5/8	14 1/2	12 5/8	2 3/4	9 11/16	7 1/4	3/4	4
SAFS22224	5 1/4	16 1/2	4 3/4	1 3/4	14 1/2	13 1/4	2 3/4	10 1/4	7 3/8	3/4	4
SAFS22226	6	18 3/8	5 1/8	1 7/8	16	14 5/8	3 1/4	11 9/16	8	7/8	4
SAFS22228	6	20 1/8	5 7/8	1 15/16	17 1/8	16	3 3/8	12	7 5/8	1	4
SAFS22230	6 5/16	21 1/4	6 1/4	2	18 1/4	17	3 3/4	12 11/16	8 3/8	1	4
SAFS22232	6 11/16	22	6 1/4	2	19 1/4	17 3/8	3 3/4	13 9/16	8 3/4	1	4
SAFS22234	7 1/16	24 3/4	6 3/4	2 1/8	21 5/8	19 3/8	4 1/4	14 9/16	9 5/8	1	4
SAFS22236	7 1/2	26 3/4	7 1/8	2 1/8	23 5/8	20 7/8	4 5/8	15 5/16	10	1	4
SAFS22238	7 7/8	28	7 1/2	2 3/8	24 3/8	21 5/8	4 1/2	16 3/16	10 5/8	1 1/4	4
SAFS22240	8 1/4	29 1/2	8	2 3/8	25	22 1/2	5	17 3/16	11 1/8	1 1/4	4
SAFS22244	9 1/2	32 3/4	8 3/4	2 3/4	27 7/8	24 3/4	5 1/4	19 7/16	11 7/8	1 1/4	4

Notes

NTN Bearings

TECHNICAL INFORMATION

Bearing Materials

The reliability and high capacity of NTN ball and roller bearings is the result of developments in metallurgy, manufacturing techniques, and our strict methods of quality control.

Contact surfaces of the bearing rings and rolling elements are subjected to repeated heavy stresses, yet must be able to maintain high precision and rotational accuracy. To accomplish this, the rings and rolling elements must be made of material that has high hardness, is resistant to rolling fatigue, is wear resistant and has good dimensional stability.

High carbon chromium bearing steel, which can be deep hardened, and case hardened steel with a hardened carburized outer layer are used for the rings and rolling elements of standard bearings. Case hardened steels have excellent shock resistance properties and are often used where impact loads are present.

The most common cause of fatigue cracking in bearings is the inclusion of non-metallic impurities in the bearing material. By using clean materials, the rolling fatigue life of the bearing is lengthened. For all its bearings, NTN uses steel of the highest cleanliness, and refined by a vacuum degassing process.

Bearing cage materials must have the strength to withstand rotational vibrations and shock loads. These materials must also have a low friction coefficient, be light weight, and be able to withstand bearing operating temperatures. Common cage materials are low carbon steel, bronze/brass alloy, or injection molded plastic. For additional information, please contact your NTN representative.

Handling & Installation

Improper handling practices prior to and during installation can easily damage the performance and precision built into NTN ball and roller bearings. It is necessary that certain precautions are taken to prevent such damage.

The most important factor to keep in mind when handling bearings is cleanliness. NTN bearings are assembled under immaculate conditions, then carefully packaged for protection against contamination and oxidation. A strong effort should be made to keep the bearings in this condition prior to final assembly. The bearing package should remain closed until ready for immediate installation. If it is necessary to unwrap bearings before that, they should be placed in a clean, dry area. Do not stack unpackaged bearings.

Bearings should be installed in an area where a clean atmosphere exists. Dirty conditions in the bearing installation area can easily lead to contamination and a premature failure. In addition, assembly benches and tools must be kept clean to prevent contaminants such as dust, grit and steel chips from entering the bearing. It is much easier to keep a bearing clean than it is to wash it clean enough for service.

The shaft, housing and other machine elements should be cleaned and inspected prior to bearing installation. The bearing mounting must be properly designed from a functional standpoint, and must have correct shaft and housing fits and shoulder heights. The design should be such that the bearings can be installed as easily as possible.

Proper assembly procedures and tools such as arbor presses, pullers, and sleeves will not only facilitate assembly, but will also avoid damage to the bearings. When a bearing is pressed on a shaft, the inner ring must be started squarely. A “cocked” ring may score the shaft and damage the bearing. The pressure must be applied directly on the ring being mounted. The bearing must not be tapped in place with direct blows on the bearing ring. The preferred practice is to place a sleeve between the bearing ring and the hammer and to tap the sleeve lightly all around. (Illustration A)

Sometimes a larger size bearing must be heated so that it can be more easily assembled on a shaft. A convenient method of doing this is to insert a heat source

such as a light bulb in the bore of the bearing, avoiding direct contact until the inner ring has expanded sufficiently. Another method is to heat the bearing in a bath of hot oil. The oil must be clean, and the temperature should not exceed 250° F. Higher temperatures may cause the oil to decompose and the bearing to lose its proper hardness.

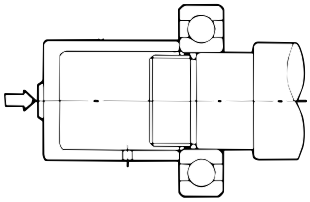

Fig. 15.1 Press mounting of inner ring

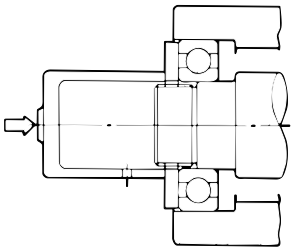

Fig. 15.2 Press mounting of inner and outer rings simultaneously

Illustration A

Running Test

After mounting, a running test should be performed to ensure that the bearing has been properly installed. The shaft or housing is first rotated by hand. If no problems are observed, a low speed, no load power test is performed. If no abnormalities are detected at this point, the load and speed are gradually increased to operating conditions. If any unusual noise, vibration or temperature rise is observed during the test, the procedure should be stopped and the installation examined.

Under normal conditions, bearing temperature rises with rotation and then reaches a stable operating temperature. If the temperature continues to rise and does not level off, or if there is a sudden temperature rise, or if the temperature is unusually high, the bearing should be inspected.

Dismounting

Bearings are often removed as part of periodic inspection procedures, or during the replacement of other parts. The shaft and housing are almost always reinstalled, and the bearings themselves are often reused. Because of this, the same guidelines for cleanliness in mounting apply to dismounting. (Illustration B)

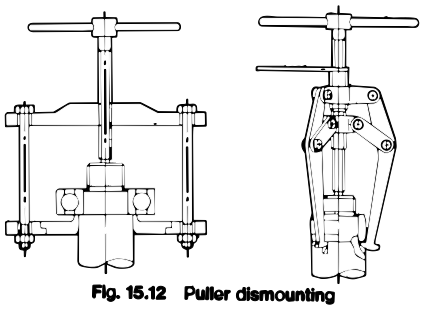

Fig. 15.12 Puller dismounting

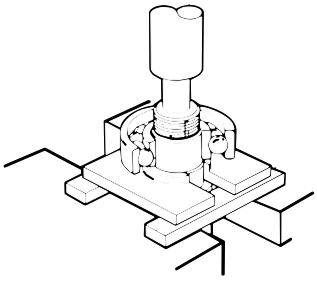

Fig. 15.13 Press dismounting

Illustration B

Lubrication

Bearing lubricants are of two basic types: oil or grease. The purpose of bearing lubrication is to prevent direct metal to metal contact between the various rolling and sliding elements. This is accomplished through the formation of a thin film on the contact surfaces, and is necessary for the following reasons:

- Friction and wear reduction
- Dissipation of heat generated within the bearing
- Prolonged bearing life
- Prevention of rust
- Protection from foreign material entering bearing

Grease lubricants are composed of either a mineral oil base or a synthetic oil base combined with a thickening agent. Grease type lubricants are relatively easy to handle, and require only the simplest sealing devices. A suitable grease should remain mechanically and chemically stable at operating temperature. It should not thicken, harden, separate, or become acid or alkaline to any marked degree.

Oil consists of either petroleum fluids refined from crude oil or synthetic fluids produced by chemical synthesis. Generally, oil lubrication is better suited for high speed and high temperature applications than grease lubrication. Oil lubrication is especially effective for those applications requiring the bearing generated heat (or heat applied to the bearing from other sources) to be dissipated. For additional lubrication information, please contact your NTN representative.

COMMON GREASE CODES AND NAMES

NTN Code	Brand	Military Specs.	Temp. Range	Thickener	Oil
2AS	Shell Alvania 2S	MIL-G-18709A	-30° F to +230° F	Lithium	Petroleum
9B	Mobil 28	MIL-G-81322	-80° F to +350° F	Synthetic	Synthetic
5C	Chevron SRI-2	MIL-G-3545C	-20° F to +350° F	Polyurea	Petroleum
1D	LX40 (DuPont Krytox 240AB)	MIL-G-38220	-40° F to +450° F	Flurotelomer	Flurotelomer
1E	Exxon Andok C	—	-30° F to +250° F	Sodium	Petroleum
4E	Exxon Andok 260	MIL-G-3545	-20° F to +275° F	Sodium	Petroleum
4M	Dow-Corning DC 44M	MIL-G-15719A	-40° F to +400° F	Lithium	Silicone
5S	Shell Aero Shell 7	MIL-G-23827A	-100° F to +250° F	Microgel	Diester
3W	Texaco Regal AFB 2	MIL-G-24139	-30° F to +230° F	Lithium	Petroleum
L627	Exxon Polyrex EM	—	-20° F to +350° F	Polyurea	Mineral
5K	Kyodo Yushi Multemp SRL	—	-40° F to +300° F	Lithium	—

ANALYSIS OF BEARING OPERATING PROBLEMS

The following table lists some common types of bearing operating problems, probable causes, and suggested corrective measures. If these suggestions do not correct the trouble, call your NTN Representative for assistance.

Trouble	Observed Characteristic	Probable Cause	Corrective Action
NOISE	High pitch, steady tone	Excessive axial load	Correct outer ring fit in housing and/or shoulder location to allow thermal expansion.
		Excessive radial load	Use correct fit of inner ring on shaft. For radial bearings, use bearing with greater internal clearance. For pre-loaded paired bearings, use lighter preload.
		Misalignment	Correct alignment.
	Low pitch, continuous or intermittent	Too much clear-ance in bearing	Use correct shaft fit. For radial bearings, use bearing with less internal clearance. For preloaded paired bear-ings, use heavier preload.
		Bearing brinelled	Replace bearing, avoid brinelling.
		Raceways pitted due to dirt	Wash all parts, replace with new bearing, use clean lubricant, improve seals.
		Resonant virbration of machine structure	Stiffen or sound-deaden thin panels and large flat surfaces.
	Intermittent squeal or high pitch noise	Balls skidding	Provide thrust preload spring. Use thinner grease. For radial bearings, use bearing with less internal clear-ance. For preloaded paired bearings, check for correct preload.
		Shaft rubbing hous-ing	Correct seals and machine parts.
	Intermittent rumbles, rattles, clicks, etc.	Too much clear-ance in bearing	Correct shaft fit. For radial bearings, use adjusting spring or bearing with less internal clearance. For pre-loaded paired bearings, check for correct preload.
		Dirt in bearing	Wash all parts, replace with new bearing if necessary, use clean lubricant, improve seals.
		Loose machine parts	Tighten all fans, pulleys, closures, spacers, slingers etc.
TEMPERATURE	High after first start	Grease redistribution	Allow machine to cool. Restart.
	Continuously high during operation	Churning of lubricant	Use lower oil level, less grease, stiffer grease.
		No lubricant	Add lubricant.
		Excessive axial load	Check outer ring fit in housing and/or shoulder location to allow thermal expansion.
		Excessive radial load	Use correct fit of inner ring on shaft. For radial bearings, use bearing with greater internal clearance. For pre-loaded paired bearings, use lighter preload.
		Bearing misaligned	Correct machine parts and alignment procedures.
		Excessive seal drag	Use different type of seal.

Continued next page …

Trouble	Observed Characteristic	Probable Cause	Corrective Action
EXCESSIVE VIBRATION	During acceleration or deceleration periods	Critical speeds of machine components	Stiffen shaft or other machine components to avoid critical speeds.
	During operation at fixed speeds	Unbalanced rotating parts	Dynamically balance rotating parts.
		Shaft bent	Straighten and re-balance.
		Cams, gears, linkage	Adjust, improve or redesign.
		Misalignment	Correct machine parts.
		Bearing brinelled	Replace bearing, avoid brinelling.
RUNOUT	Shaft does not run true. Shaft binds when rotated by hand.	Shaft bent	Straighten shaft and re-balance.
		Bearing misaligned	Correct machine parts and alignment procedures.
		Bearing rings out of square	Check squareness of shaft and housing shoulders, spacers and flingers, etc.
		Dirt	Wash all parts, replace with new bearing if necessary, use clean lubricant, improve seals.
		Machine deflection	Stiffen machine members.
INNER RING WEARS LOOSE ON SHAFT	Wear of the shaft seat	Incorrect shaft fit	Use recommended shaft fit.
		Poor shaft finish	Smooth turn or grind shaft to size after metalspraying or chrome plating.
OUTER RING WEARS LOOSE IN HOUSING	Wear in housing bore	Housing fit too loose	Use recommended housing fit.
		Unbalanced forces	Dynamically balance rotating parts. Clamp outer ring faces. Use cylindrical roller bearing and press fit outer and inner rings.
		Poor finish	Bore or grind housing I.D. oversize, press in a bushing and finish bore or grind to size.
		Soft housing material	Use steel liners. Work-harden bore.

TECHNICAL INFORMATION BEARING NOMENCLATURE

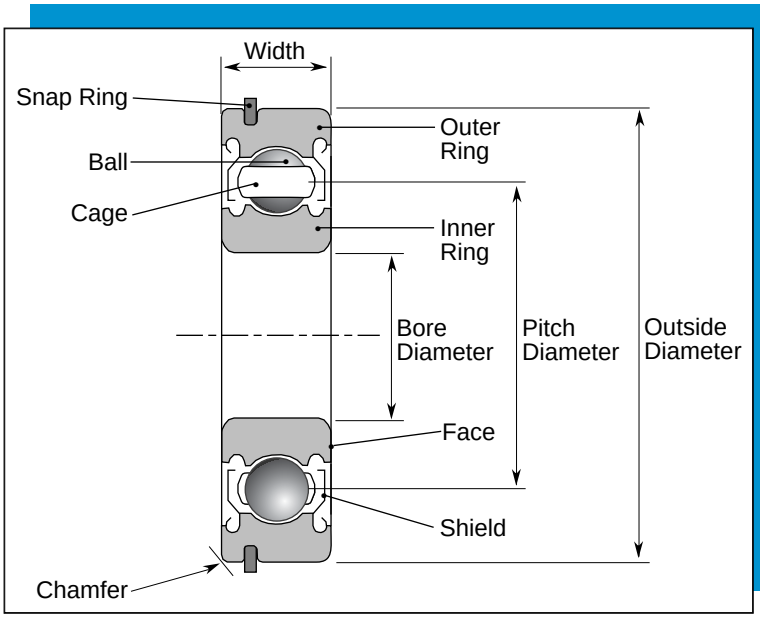

Single Row Deep Groove Ball Bearing

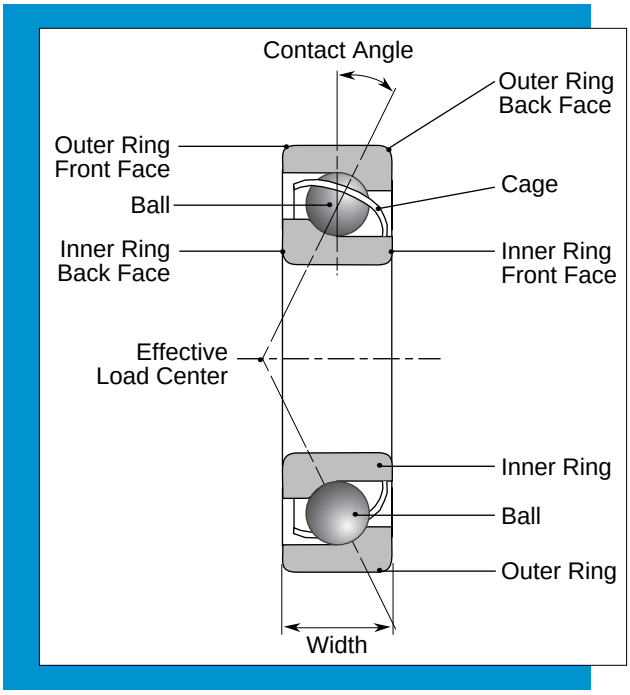

Single Row Angular Contact Ball Bearing

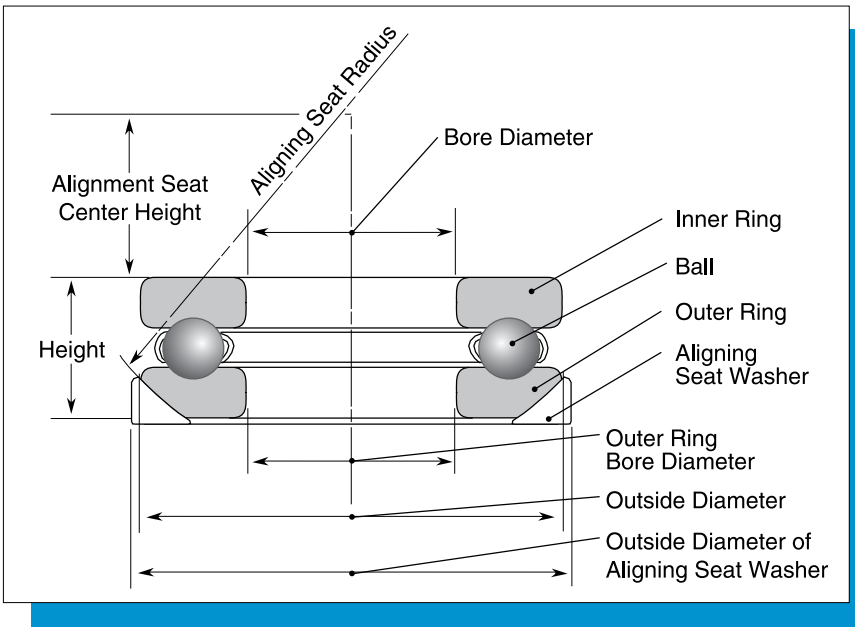

Single Direction Thrust Ball Bearing

TECHNICAL INFORMATION BEARING NOMENCLATURE

Spherical Roller Bearing

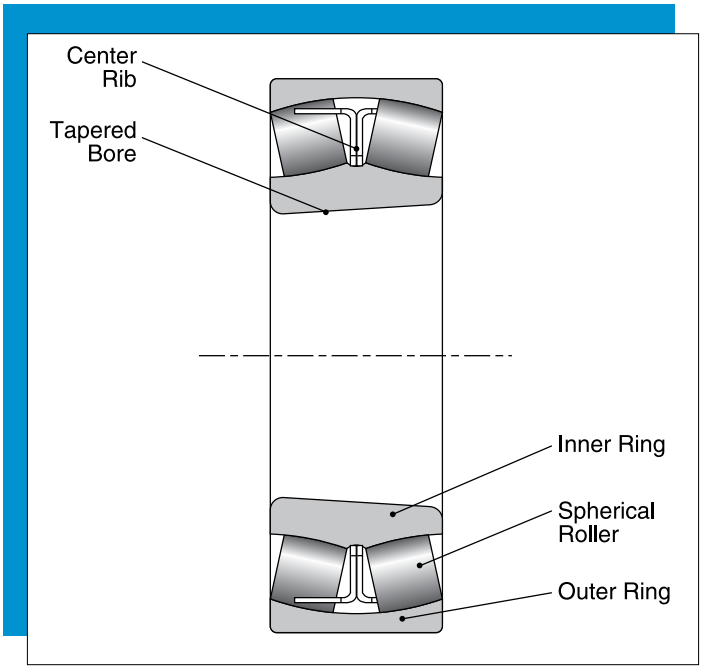

Cylindrical Roller Bearing

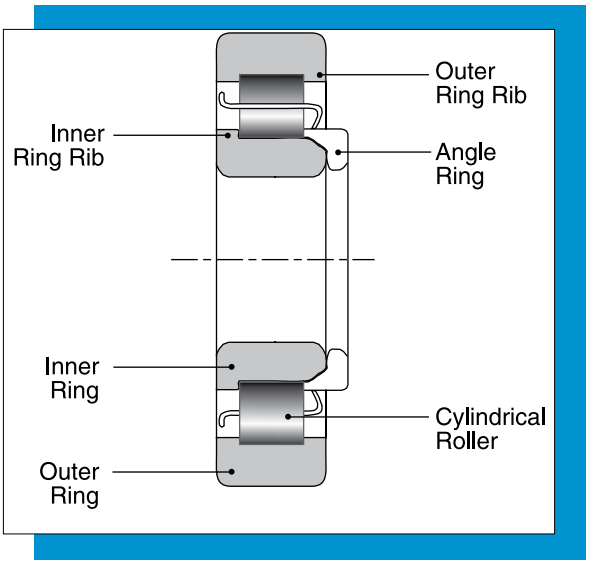

Tapered Roller Bearing

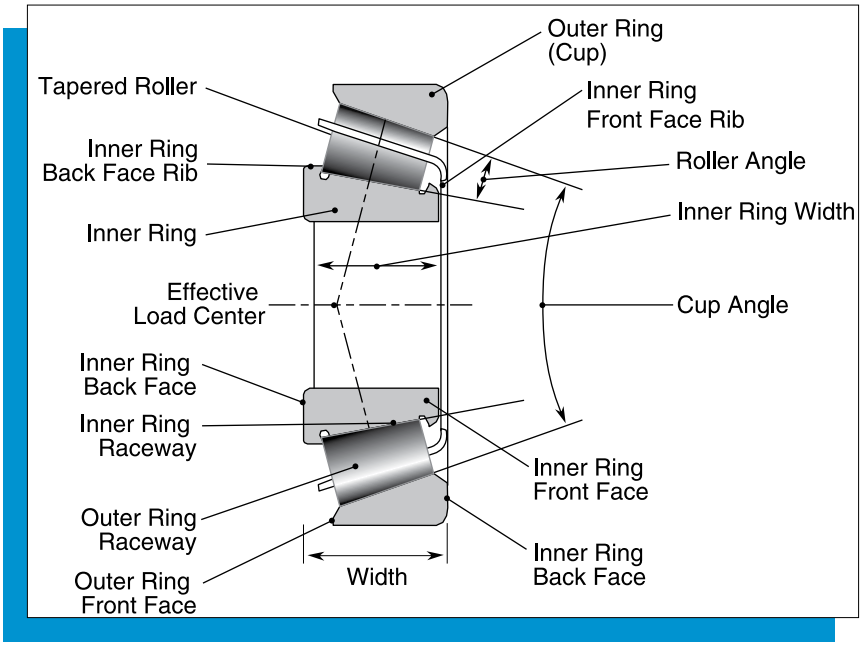

PILLOW BLOCKS

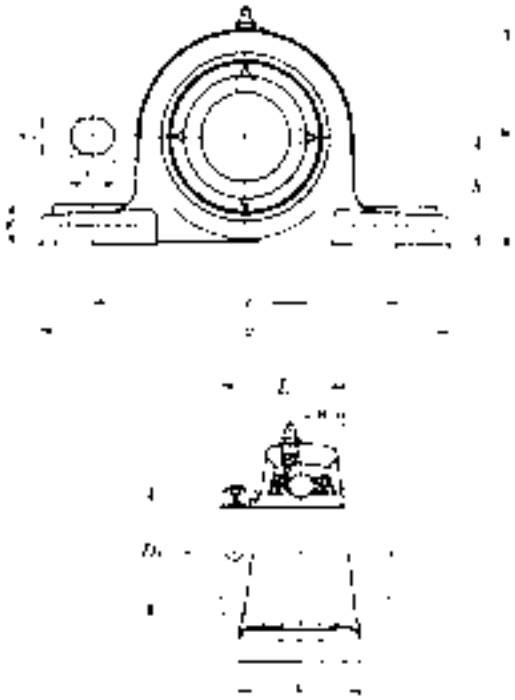

FLANGE UNITS

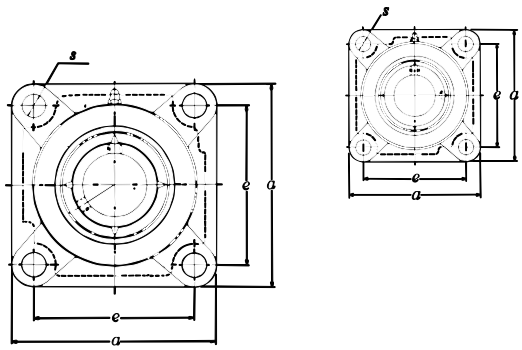

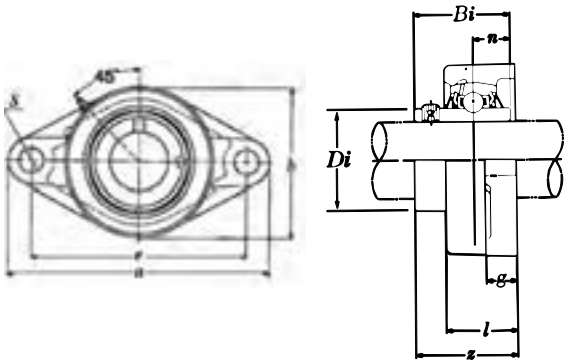

BEARING UNIT DIMENSION NOMENCLATURE

a = Total housing length

b = Total housing width – flange units

e = Bolt hole center-to-center distance

s_1, s_2 = Bolt hole size, pillow blocks

s = Bolt hole size, flange units

Z = Total housing plus bearing depth

l = Total housing depth – flange units

i = Bearing ball center to housing rear depth

N = Bearing ball center to bearing inner ring face

B_i = Total bearing unit depth – flange units

g = Flange depth and bolt hole depth

w = Total bearing unit height – pillow blocks

h = Bearing unit base to bearing bore center (Center Height) Pillow Blocks

STANDARD GREASE FITTINGS

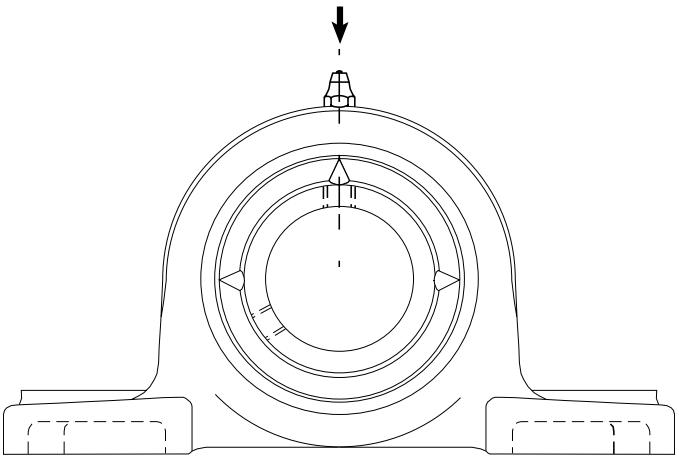

45° GREASE FITTINGS

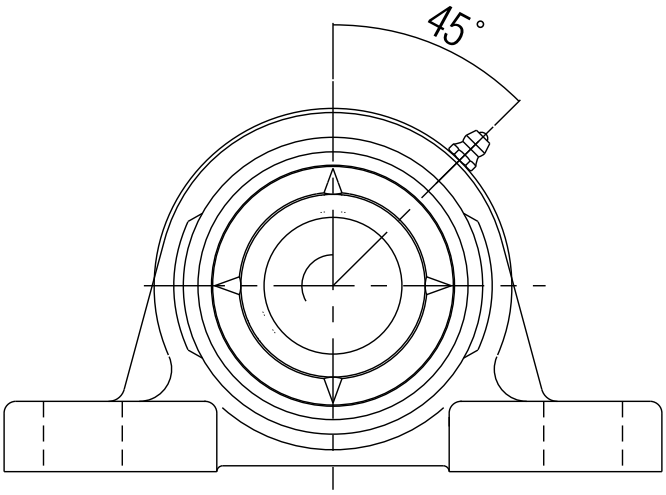

QUASI-STANDARD GREASE FITTINGS

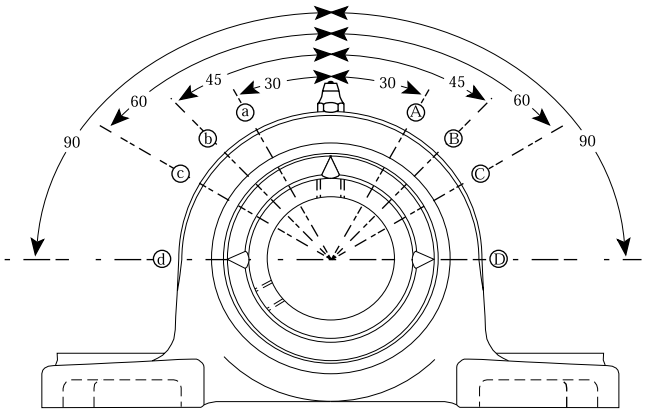

LOCATION OF GREASE FITTING			
Position	Direction	Rotation	Suffix
Ⓐ	*Clockwise	30°	(10)
Ⓑ	Clockwise	45°	(11)
Ⓒ	Clockwise	60°	(12)
Ⓓ	Clockwise	90°	(13)
ⓐ	**Counterclockwise	30°	(14)
ⓑ	Counterclockwise	45°	(15)
ⓒ	Counterclockwise	60°	(16)
ⓓ	Counterclockwise	90°	(17)

*,** Facing **NTN** Brand Marking on the housing.

Example: UCP205D1 (11) grease fitting on the location capital “B.”

BEARING RATINGS

The following load rating information applies to radial, angular contact and tapered roller bearings, but not specifically to thrust bearings. When determining load ratings, remember that all ratings are not absolute.

STATIC LOAD RATING

The static load rating is the Radial load that will cause a certain amount of immediate damage to the internal operating surfaces of the bearing. This level of surface damage is acceptable in most cases but in some demanding situations may cause too much noise, so a much lower load limitation may be necessary. A higher load may be feasible if subsequent noise is not intolerable.

Actual noise levels are very dependent upon speed so if the speed is low, more surface damage can be accepted. Also, tolerable noise levels vary depending upon the application.

The static load rating has nothing to do with allowable Axial or Thrust loading. In most cases, axial ratings are much lower than those in this catalog so please consult NTN when such loads approach 25% of this rating.

DYNAMIC LOAD RATING

The dynamic load rating has no direct significance other than that it is a number which, along with speed, must be used in an equation to calculate theoretical bearing life. Load usage of this magnitude is usually very inappropriate. Life will be too short and the bearing may become noisy if the static load rating is exceeded. The rating can be used to compare different bearings if the life equations that apply to them are the same.

LIMITING SPEEDS

Limiting speeds are shown for oil and grease and contact seals when appropriate. However, many factors are omitted in this simplified rating that can affect the actual limit in a given case. Although many applications can run at much higher speeds, it is prudent to take precautions and consult NTN when speeds exceed 75% of the limit.

FITTING PRACTICE

The following five tables list the most likely suggestions for shaft and housing bore diameters for the more popular bearing series. The values in the tables provide the allowable deviations from the nominal diameters for most normal conditions.

UNUSUAL CONDITIONS

Different fits may be required for unusual conditions of loading, speed, temperature, housing or shaft material, wall thickness, vibration, poor surface finish and so on. For example, tighter fits are required for heavy loads, vibration, hollow shafts or thin housings, light alloy or plastic housings, etc. Consult NTN when in doubt.

ROTATING LOADS

The tables assume that the direction of load is constant. Where load rotates, reverse the rotating and stationary fits.

EFFECT ON CLEARANCES

The fits shown will usually work well with standard or C3 clearance bearings. Minor fit differences of .0001” or .0002” can usually be ignored but greater differences may require the use of other clearance classes.

AN EXAMPLE to illustrate the use of the tables:

A 6218 ball bearing has a **nominal** 90mm bore and a **nominal** inch bore of 3.5433”. Assuming normal conditions, its shaft size is found in table 1. The 5th column, shows +7 to +1. These deviations applied to the **nominal** 3.5433” give a shaft size range of 3.5440” to 3.5434”.

STANDARD SHAFT SIZES

Deviation from Nominal Sizes in Units of 0.0001 inch

TABLE 1 – METRIC RADIAL BEARINGS

Nominal Bearing Bore				Pure Axial Loads		Radial Loads							
						Stationary Shaft		Rotating Shaft					
mm		inch						Ball Bearings		Cylindrical and Tapered Rollers		Spherical Rollers	
over	incl	over	incl	max	min	max	min	max	min	max	min	max	min
3	6	0.1181	0.2362	+2	-1	-2	-5	+1	-1				
6	10	0.2362	0.3937	+3	-1	-2	-6	+2	-1				
10	18	0.3937	0.7087	+3	-1	-2	-7	+2	-1	+4	0		
18	30	0.7087	1.1811	+4	-2	-3	-8	+4	+1	+4	+1		
30	40	1.1811	1.5748	+4	-2	-4	-10	+5	+1	+5	+1	+5	+1
40	50	1.5748	1.9685	+4	-2	-4	-10	+5	+1	+8	+4	+8	+4
50	65	1.9685	2.5591	+5	-3	-4	-11	+6	+1	+9	+4	+9	+4
65	80	2.5591	3.1496	+5	-3	-4	-11	+6	+1	+9	+4	+12	+4
80	100	3.1496	3.9370	+5	-4	-5	-13	+7	+1	+11	+5	+14	+5
100	120	3.9370	4.7244	+5	-4	-5	-13	+7	+1	+14	+5	+18	+9
120	140	4.7244	5.5118	+6	-4	-6	-15	+8	+1	+16	+6	+20	+11
140	180	5.5118	7.0866	+6	-4	-6	-15	+8	+1	+20	+11	+27	+17
180	250	7.0866	9.8425	+6	-5	-6	-17	+9	+2	+24	+12	+31	+20
250	280	9.8425	11.0236	+6	-6	-7	-19	+11	+2	+26	+13	+35	+22
280	315	11.0236	12.4016	+6	-6	-7	-19	+11	+2	+26	+13	+51	+39

TABLE 2 – TAPERED ROLLER BEARINGS (INCH SERIES)

Nominal Bearing Bore		Rotating Shaft		Stationary Shaft	
over	incl	max	min	max	min
0	3	+15	+10	0	- 5
3	12	+25	+15	0	-10
12	24	+50	+30	0	-20

"J" prefix tapers are metric - see above.

TABLE 3 – INSERT BEARINGS SET SCREW & LOCKING COLLAR TYPES

Nominal Bearing Bore (Inches)		Low Speed		Medium Speed		High Speed	
over	incl	max	min	max	min	max	min
0	.7	0	-10	0	-7	+7	+3
.7	1.2	0	-13	0	-8	+7	+3
1.2	2.0	0	-15	0	-10	+10	+4
2.0	3.2	0	-18	0	-12	+12	+4
3.2	4.8	0	-21	0	-14	+14	+5
Speed = Bore x RPM		2500 max		3500 max		7000 max	

STANDARD HOUSING BORE SIZES

Deviation from Nominal Sizes in Units of 0.0001 inch

TABLE 4 – METRIC RADIAL BEARINGS

Nominal Bearing O.D.				Stationary Housing				Rotating Housing			
mm		Inch		Normal		Heated Shaft		Normal		Thin Wall Housing	
over	incl	over	incl	max	min	max	min	max	min	max	min
10	18	0.3937	0.7087	+7	0	+10	+3	-2	-9	-4	-11
18	30	0.7087	1.1811	+8	0	+11	+3	-3	-11	-5	-13
30	50	1.1811	1.9685	+10	0	+14	+4	-3	-13	-6	-16
50	80	1.9685	3.1496	+12	0	+16	+4	-3	-15	-9	-21
80	120	3.1496	4.7244	+14	0	+19	+5	-4	-18	-11	-25
120	180	4.7244	7.0866	+16	0	+22	+6	-6	-22	-12	-28
180	250	7.0866	9.8425	+18	0	+24	+6	-8	-26	-14	-32
250	315	9.8425	12.4016	+20	0	+27	+7	-8	-28	-14	-34
315	400	12.4016	15.7480	+22	0	+29	+7	-8	-30	-17	-39
400	500	15.7480	19.6850	+25	0	+33	+8	-9	-34	-19	-44

TABLE 5 – TAPERED ROLLER BEARINGS (INCH SERIES)

Nominal Cup O.D. Inch		Stationary Housing		Rotating Housing	
over	incl	max	min	max	min
0	3	+10	0	-5	-15
3	5	+10	0	-10	-20
5	12	+20	0	-10	-20
12	24	+30	+10	-10	-20

"J" prefix tapers are metric - see above.

NTN Bearings

Tolerance Tables, Clearance Tables and Interchange Data

TOLERANCES

Definitions pertaining to tolerance limits for boundary dimensions, various runouts, and internal clearance are given in AFBMA Standard 4, ANSI B3.4: Tolerance Definitions and Gaging Practice. The tolerance limits listed in this Standard refer exclusively to these concepts.

SYMBOLS COMMON TO RADIAL BEARINGS AND THRUST BEARINGS		
d	=	Basic bore diameter
D	=	Basic outside diameter
V_{dp}	=	Single radial plane bore diameter variation
V_{Dp}	=	Single radial plane outside diameter variation
$r_{a\ max}$	=	Largest shaft and housing fillets which the bearing chamfer must clear
r_s	=	Single chamfer dimension of a ring
$r_{s\ min}$	=	Low limit of r
$r_{s\ max}$	=	High limit of r

SYMBOLS APPLICABLE TO RADIAL BEARINGS		
B	=	Basic width of an individual inner ring; also of an individual outer ring when both rings have the same basic width
B_s	=	Single width of an inner ring; also that of an outer ring when both rings have the same basic width
V_{dmp}	=	Mean single plane bore diameter variation
V_{Dmp}	=	Single plane mean outside diameter deviations
K_1	=	Radial runout of an inner ring raceway
K_e	=	Radial runout of an outer ring raceway
S_d	=	Reference side runout with bore of an inner ring
S_D	=	Outside cylindrical surface runout with reference side of an outer ring
S_{ia}	=	Assembled bearing inner ring (or cone back face) runout with raceway
S_{ea}	=	Assembled bearing outer ring (or cup back face) runout with raceway
V_{Bs}	=	Width variation of an inner ring; also that of an outer ring when both rings have the same basic width

SYMBOLS APPLICABLE TO SINGLE DIRECTION THRUST BEARINGS		
H	=	Basic bearing height
H_m	=	Actual bearing height
A_i	=	Raceway runout with flat seat face of shaft washer
A_e	=	Raceway runout with flat seat face of housing washer

TOLERANCE CLASS ABEC-1, RBEC-1

Tolerance limits for:

Metric ball and roller bearings (except tapered roller bearings) conforming to basic boundary plans.

NTN TOLERANCE TABLES

Table 1 (Tolerance Limits in 0.0001 inch)

INNER RING

BASIC BORE DIAMETER d				BORE Allowable Deviations		SINGLE RADIAL PLANE BORE DIAMETER VARIATION V_{dp} Diameter Series		SINGLE PLANE MEAN BORE DIAMETER DEVIATIONS V_{dmp}	RADIAL RUNOUT	WIDTH Allowable Deviations from B			
										Normal Single Bearings B_s		Modified Single Bearings B_s	
mm		inch		d_{mp}		Max.		Max.	K_{ia} Max.				
Over	Incl.	Over	Incl.	Low	High	0.1	2,3,4			High	Low	High	Low
2.5	10	.0984	.3937	- 3	+ 0	3	2.5	2.5	3	+ 0	- 50	+ 0	- 100
10	18	.3937	.7087	- 3	+ 0	3	2.5	2.5	4	+ 0	- 50	+ 0	- 100
18	30	.7087	1.1811	- 4	+ 0	3	2.5	2.5	5	+ 0	- 50	+ 0	- 100
30	50	1.1811	1.9685	- 5	+ 0	4	3	3	6	+ 0	- 50	+ 0	- 100
50	80	1.9685	3.1496	- 6	+ 0	4.5	3.5	3.5	8	+ 0	- 60	+ 0	- 150
80	120	3.1496	4.7244	- 8	+ 0	7.5	4.5	4.5	10	+ 0	- 80	+ 0	- 150
120	180	4.7244	7.0866	- 10	+ 0	10	6	6	12	+ 0	- 100	+ 0	- 200
180	250	7.0866	9.8425	- 12	+ 0	12	7.5	7.5	16	+ 0	- 120	+ 0	- 200
250	315	9.8425	12.4015	- 14	+ 0	15	9	9	20	+ 0	- 140	+ 0	- 200
315	400	12.4015	15.7480	- 16	+ 0	17	10	10	24	+ 0	- 160	+ 0	- 250
400	500	15.7480	19.6850	- 18	+ 0	20	12	12	26	+ 0	- 180	—	—
500	630	19.6850	24.8031	- 20	+ 0	22	13	13	28	+ 0	- 200	—	—
630	800	24.8031	31.4961	- 30	+ 0	25	15	15	32	+ 0	- 300	—	—
800	1000	31.4961	39.3701	- 40	+ 0	—	—	—	35	+ 0	- 400	—	—
1000	1250	39.3701	49.2126	- 50	+ 0	—	—	—	—	+ 0	- 500	—	—
1250	1600	49.2126	62.9921	- 60	+ 0	—	—	—	—	+ 0	- 600	—	—
1600	2000	62.9921	78.7402	- 80	+ 0	—	—	—	—	+ 0	- 800	—	—

OUTER RING

BASIC OUTSIDE DIAMETER D				SINGLE RADIAL PLANE OUTSIDE DIAMETER VARIATION V_{Dp}					SINGLE PLANE MEAN OUTSIDE DIAMETER VARIATION V_{Dmp}	RADIAL RUNOUT	WIDTH LIMITS
				All Bearings		Open Bearings		Bearings with Shields or Seals			
mm		inch		V_{dmp}							
Over	Incl.	Over	Incl.	High	Low	0.1	2,3,4	2,3,4	Max.	K_{ea} Max.	
6	18	.2362	.7087	+ 0	- 3	3	2.5	4	2.5	6	Identical to those of inner ring of the same bearing
18	30	.7087	1.1811	+ 0	- 4	3.5	3	4.5	3	6	
30	50	1.1811	1.9685	+ 0	- 5	4.5	3	6.5	3	8	
50	80	1.9685	3.1496	+ 0	- 5	5	4	8	4	10	
80	120	3.1496	4.7244	+ 0	- 6	7.5	4.5	10	4.5	14	
120	150	4.7244	5.9055	+ 0	- 8	9	5.5	12	5.5	16	
150	180	5.9055	7.0866	+ 0	- 10	12	7.5	15	7.5	18	
180	250	7.0866	9.8425	+ 0	- 12	15	9	—	9	20	
250	315	9.8425	12.4015	+ 0	- 14	17	10	—	10	24	
315	400	12.4015	15.7480	+ 0	- 16	20	12	—	12	28	
400	500	15.7480	19.6850	+ 0	- 18	22	13	—	13	32	
500	630	19.6850	24.8031	+ 0	- 20	25	15	—	15	40	
630	800	24.8031	31.4961	+ 0	- 30	37	22	—	22	47	
800	1000	31.4961	39.3701	+ 0	- 40	49	30	—	30	55	
1000	1250	39.3701	49.2126	+ 0	- 50	—	—	—	—	64	
1250	1600	49.2126	62.9921	+ 0	- 65	—	—	—	—	76	
1600	2000	62.9921	78.7402	+ 0	- 80	—	—	—	—	90	
2000	2500	78.7402	98.4252	+ 0	- 100	—	—	—	—	—	

Bore tolerance limits do not apply to tapered bore inner rings.

This refers to a ball bearing on which one or both sides are modified so two or more bearings can be mounted side by side as a unit.

Applies before mounting and after removal of internal or external snap ring.

No values have been established for diameter series 0 and 1.

TOLERANCE CLASS ABEC-5, RBEC-5

Tolerance limits for:

Metric ball and roller bearings (except instrument bearings and tapered roller bearings) conforming to basic boundary plans.

Table 2 (Tolerance Limits in 0.0001 inch)

INNER RING

BASIC BORE DIAMETER d mm Over	Incl.	inch Over	Incl.	BORE Allowable Deviations from d All Bearings d_{mp} Low	High	SINGLE RADIAL PLANE BORE DIAMETER VARIATION V_{dp} Bearings of Diameter Series 4,3,2,1,0 Max	9,8 Max	SINGLE PLANE MEAN BORE DIAMETER DEVIATIONS V_{dmp} Max	RUNOUT Radial K_{ia} Max.	Reference Side With Bore S_d Max.	Raceway With Reference Side S_{ia} Max.	WIDTH Allowable Deviations from B Normal Single Bearings B_s High	Low	Modified Single Bearings B_s High	Low	Variation of B_s in Individual Ring V_{Bs} Max.
.6	10	.0236	.3937	- 2	+ 0	2	1.5	1	1.5	3	3	+ 0	- 16	+ 0	- 100	2
10	18	.3937	.7087	- 2	+ 0	2	1.5	1	1.5	3	3	+ 0	- 32	+ 0	- 100	2
18	30	.7087	1.1811	- 2	+ 0	2.5	2	1	1.5	3	3	+ 0	- 50	+ 0	- 100	2
30	50	1.1811	1.9685	- 2	+ 0	3	2.5	1.5	2.0	3	3	+ 0	- 50	+ 0	- 100	2
50	80	1.9685	3.1496	- 3	+ 0	3.5	3	2	2.0	3	3	+ 0	- 60	+ 0	- 100	2
80	120	3.1496	4.7244	- 3	+ 0	4	3	2	2.5	3	4	+ 0	- 80	+ 0	- 150	3
120	180	4.7244	7.0866	- 4	+ 0	5	4	3	3.0	4	4	+ 0	- 100	+ 0	- 150	3
180	250	7.0866	9.8425	- 5	+ 0	6	4.5	3	4.0	4	5	+ 0	- 120	+ 0	- 200	4
250	315	9.8425	12.4015	- 5	+ 0	7	5.5	3.5	5.0	5	6	+ 0	- 140	+ 0	- 200	5
315	400	12.4015	15.7480	- 6	+ 0	9	7	4.5	5.0	5	7	+ 0	- 160	+ 0	- 250	5

OUTER RING

BASIC OUTSIDE DIAMETER D mm Over	Incl.	inch Over	Incl.	SINGLE RADIAL PLANE OUTSIDE DIAMETER VARIATION V_{dp} All Bearings V_{dmp} High	Low	Open Bearings Bearings of Diameter Series 7,8,9 Max	0,1,2,3,4 Max	Bearings with Shields or Seals Diameter Series 4,3,2,1,0 Max	RUNOUT Radial K_{ea} Max.	Cylindrical Surface with Reference Side S_D Max.	Raceway with Reference Side S_{ea} Max.	WIDTH Limits	Variation of B_s in Individual Ring V_{Bs} Max.
2.5	6	.0984	.2362	+ 0	- 2	2	1.5	1	2	3	3	Identical	2
6	18	.2362	.7087	+ 0	- 2	2	1.5	1	2	3	3		2
18	30	.7087	1.1811	+ 0	- 2	2.5	2	1	2	3	3	to those	2
30	50	1.1811	1.9685	+ 0	- 2	3	2	1.5	2	3	3		2
50	80	1.9685	3.1496	+ 0	- 3	3.5	3	2	3	3	4		2
80	120	3.1496	4.7244	+ 0	- 3	4	3	2	4	3	5	of inner	3
120	150	4.7244	5.9055	+ 0	- 4	4.5	3	2.5	4	4	5		3
150	180	5.9055	7.0866	+ 0	- 5	5	4	3	5	4	6	ring of	3
180	250	7.0866	9.8425	+ 0	- 5	6	4.5	3	5	4	6		4
250	315	9.8425	12.4015	+ 0	- 5	7	5.5	3.5	6	5	7	the same	5
315	400	12.4015	15.7480	+ 0	- 6	8	6	4	7	5	8		5
400	500	15.7480	19.6850	+ 0	- 7	9	6.5	4.5	8	6	9	bearing	6
500	630	19.6850	24.8031	+ 0	- 8	11	8.5	5.5	9	6	10		6

For Instrument Ball Bearing tolerances see AFBMA Standard 12, ANSI B3.10.

Bore tolerance limits do not apply to tapered bore inner rings.

Does not apply to roller bearings or self-aligning ball bearings.

This refers to a ball bearing on which one or both sides are modified so two or more bearings can be mounted side by side as a unit.

For bearings with shields or seals of diameter series 9 and 8, D_s is not restricted.

Applies to bearings of width series 1 or narrower.

No values have been established for capped bearings.

TOLERANCE CLASS ABEC-7

Tolerance limits for:

Metric radial and angular contact ball bearings (except instrument bearings).

NTN TOLERANCE TABLES

Table 3 (Tolerance Limits in 0.0001 inch)

INNER RING

BASIC BORE DIAMETER d mm Over	mm Incl.	inch Over	inch Incl.	SINGLE PLANE MEAN OUTER DIAMETER DEVIATION Basic Bearings d_{mp} Low	High	SINGLE RADIAL PLANE BORE DIAMETER VARIATION V_{dp} Bearings of Diameter Series 7,8,9 Max	0,1,2,3,4 Max	SINGLE PLANE MEAN BORE DIAMETER DEVIATIONS V_{dmp} Max	RUNOUT Radial K_{ia} Max.	Reference Side With Bore S_d Max.	Raceway With Reference Side S_{ia} Max.	WIDTH Allowable Deviations from B Normal Single Bearings B_s High	Low	Modified Single Bearings B_s High	Low	Variation of B_s in Individual Ring V_{Bs} Max.
.6	10	.0236	.3937	- 1.5	+ 0	1.5	1	1	1.0	1.0	1.0	+ 0	- 16	+ 0	- 100	1.0
10	18	.3937	.7087	- 1.5	+ 0	1.5	1	1	1.0	1.0	1.0	+ 0	- 32	+ 0	- 100	1.0
18	30	.7087	1.1811	- 1.5	+ 0	2	1.5	1	1.0	1.5	1.5	+ 0	- 50	+ 0	- 100	1.0
30	50	1.1811	1.9685	- 2.0	+ 0	2.5	2	1	1.5	1.5	1.5	+ 0	- 50	+ 0	- 100	1.0
50	80	1.9685	3.1496	- 2.0	+ 0	3	2	1.5	1.5	2.0	1.5	+ 0	- 60	+ 0	- 100	1.5
80	120	3.1496	4.7244	- 2.5	+ 0	3	2.5	1.5	2.0	2.0	2.0	+ 0	- 80	+ 0	- 150	1.5
120	180	4.7244	7.0866	- 3.0	+ 0	4	3	2	3.0	3.0	3.0	+ 0	- 100	+ 0	- 150	2.0
180	250	7.0866	9.8425	- 4.0	+ 0	4.5	3.5	2.5	3.0	3.0	3.0	+ 0	- 120	+ 0	- 200	2.0
250	315	9.8425	12.4015	- 5.0	+ 0	—	—	—	4.0	4.0	4.0	+ 0	- 140	+ 0	- 200	3.0

OUTER RING

BASIC OUTSIDE DIAMETER D mm Over	mm Incl.	inch Over	inch Incl.	SINGLE RADIAL PLANE OUTSIDE DIAMETER VARIATION V_{Dp} All Bearings V_{dmp} High	Low	Open Bearings Bearings of Diameter Series 7,8,9 Max	0,1,2,3,4 Max	Bearings with Shields or Seals Diameter Series 4,3,2,1,0 Max	RUNOUT Radial K_{ea} Max.	Cylindrical Surface with Reference Side S_D Max.	Raceway with Reference Side S_{ea} Max.	WIDTH Limits	Variation of B_s in Individual Ring V_{Bs} Max.
2.5	6	.0984	.2362	+ 0	- 2	1.5	1	1	2		1	Identical	
6	18	.2362	.7087	+ 0	- 2	1.5	1	1	1.5	1.5	2		1
18	30	.7087	1.1811	+ 0	- 2	2	1.5	1	1.5	1.5	2	to those	1
30	50	1.1811	1.9685	+ 0	- 2	2.5	2	1	2.0	1.5	2		1
50	80	1.9685	3.1496	+ 0	- 2	3	2	1.5	2.0	1.5	2		1
80	120	3.1496	4.7244	+ 0	- 3	3	2.5	1.5	2.0	2.0	2	of inner	2
120	150	4.7244	5.9055	+ 0	- 4	3.5	3	2	3.0	2.0	3		2
150	180	5.9055	7.0866	+ 0	- 4	4	3	2	3.0	2.0	3	ring of	2
180	250	7.0866	9.8425	+ 0	- 4	4.5	3	2.5	4.0	3.0	4		3
250	315	9.8425	12.4015	+ 0	- 5	5	4	3	4.0	3.0	4	the same	3
315	400	12.4015	15.7480	+ 0	- 5	6	4.5	3	5.0	4.0	5		3
400	500	15.7480	19.6850	+ 0	- 6	—	—	—	5.0	4.0	5	bearing	4

For Instrument Ball Bearing tolerances see AFBMA Standard 12, ANSI B3.10.

Does not apply to self-aligning ball bearings.

This refers to a ball bearing on which one or both sides are modified so two or more bearings can be mounted side by side as a unit.

For bearings with shields or seals of diameter series 9 and 8, Ds is not restricted.

Applies to bearings of width series 1 or narrower.

No values have been established for capped bearings.

TOLERANCE CLASS ABEC-9

Tolerance limits for:

Metric radial and angular contact ball bearings (except instrument bearings).

Table 4 (Tolerance Limits in 0.0001 inch)

INNER RING

BASIC BORE DIAMETER d mm Over	mm Incl.	inch Over	inch Incl.	SINGLE RADIAL PLANE BORE DIAMETER VARIATION V_{dp} Max	SINGLE PLANE MEAN BORE DIAMETER DEVIATIONS V_{dmp} Max	RUNOUT Radial K_{ia} Max.	RUNOUT Reference Side With Bore S_d Max.	RUNOUT Raceway With Reference Side S_{ia} Max.	WIDTH Allowable Deviations from B Normal Single Bearings B_s High	Normal Single Bearings B_s Low	Modified Single Bearings B_s High	Modified Single Bearings B_s Low	Variation of B_s in Individual Ring V_{Bs} Max.
.6	10	.0236	.3937	1	.5	.5	.5	.5	+ 0	- 10	+ 0	- 100	.5
10	18	.3937	.7087	1	.5	.5	.5	.5	+ 0	- 32	+ 0	- 100	.5
18	30	.7087	1.1811	1	.5	1.0	.5	1.0	+ 0	- 50	+ 0	- 100	.5
30	50	1.1811	1.9685	1	.5	1.0	.5	1.0	+ 0	- 50	+ 0	- 100	.5
50	80	1.9685	3.1496	1.5	1	1.0	.5	1.0	+ 0	- 60	+ 0	- 100	.5
80	120	3.1496	4.7244	2	1	1.0	1.0	1.0	+ 0	- 80	+ 0	- 150	1.0
120	150	4.7244	5.9055	3	1.5	1.0	1.0	1.0	+ 0	- 100	+ 0	- 150	1.0
150	180	5.9055	7.0866	3	1.5	2.0	1.5	2.0	+ 0	- 120	+ 0	- 200	1.5
180	250	7.0866	9.8425	3	1.5	2.0	1.5	2.0	+ 0	- 140	+ 0	- 200	1.5

OUTER RING

BASIC OUTSIDE DIAMETER D mm Over	mm Incl.	inch Over	inch Incl.	SINGLE RADIAL PLANE OUTSIDE DIAMETER VARIATION V_{Dp} Max	V_{dmp} Max	RUNOUT Radial K_{ea} Max.	RUNOUT Outside Cylindrical Surface with Reference Side S_D Max.	RUNOUT Raceway with Reference Side S_{ea} Max.	WIDTH Limits	WIDTH Variation of B_s in Individual Ring V_{Bs} Max.
2.5	18	.0984	.7087	1	.5	.5	.5	.5		.5
18	30	.7087	1.1811	1.5	1	1.0	.5	1.0	Identical to	.5
30	50	1.1811	1.9685	1.5	1	1.0	.5	1.0		.5
50	80	1.9685	3.1496	1.5	1	1.5	.5	1.5	those of	.5
80	120	3.1496	4.7244	2	1	2.0	1.0	2.0		1.0
120	150	4.7244	5.9055	2	1	2.0	1.0	2.0	inner ring	1.0
150	180	5.9055	7.0866	3	1.5	2.0	1.0	2.0		1.0
180	250	7.0866	9.8425	3	1.5	2.5	1.5	2.5		1.5
250	315	9.8425	12.4015	3	1.5	2.5	1.5	2.5	of the same	1.5
315	400	12.4015	15.7480	4	2	3.0	2.5	3.0		2.5
									bearing	

Applies to bearings of metric width series 1 or narrower.

Does not apply to self-aligning ball bearings.

This refers to a ball bearing on which one or both sides are modified so two or more bearings can be mounted side by side as a unit.

These limits apply before seals or shields are inserted.

For Instrument Ball Bearing tolerances see AFBMA Standard 12, ANSI B3.10.

No values have been established for capped bearings.

Tolerance Limits for Dimensions and Runout.

There is only one class of tolerances established for thrust ball bearings.

They conform with those adopted by ISO (ISO Recommendation R199).

Tolerance Limits for:

Metric single direction thrust ball bearings (of dimensions conforming to the basic plan for boundary dimensions of single direction, metric thrust bearings).

Table 5 (Tolerance Limits in 0.0001 inch)

THRUST BALL BEARINGS														
BASIC BORE DIAMETER *d*				SHAFT WASHER Allowable Deviations from *d*		BOTH INDIVIDUAL WASHERS Raceway Runout with Flat Seat Face	BEARING HEIGHT Allowable Deviations from H		BASIC OUTSIDE DIAMETER *D*				HOUSING WASHER Allowable Deviations from *D*	
mm		inch		d_s		A_i, A_e	H_m		mm		inch		D_s	
Over	*Incl.*	*Over*	*Incl.*	*Low*	*High*	*Max.*	*High*	*Low*	*Over*	*Incl.*	*Over*	*Incl.*	*High*	*Low*
0	18	.0000	.7087	- 3	+ 2	4	+ 0	- 30	10	18	.3937	.7087	+ 0	- 4
18	30	.7087	1.1811	- 4	+ 3	4	+ 0	- 30	18	30	.7087	1.1811	+ 0	- 5
30	50	1.1811	1.9685	- 5	+ 4	4	+ 0	- 39	30	50	1.1811	1.9685	+ 0	- 6
50	80	1.9685	3.1496	- 6	+ 5	4	+ 0	- 49	50	80	1.9685	3.1496	+ 0	- 7
80	120	3.1496	4.7244	- 8	+ 6	6	+ 0	- 59	80	120	3.1496	4.7244	+ 0	- 9
120	180	4.7244	7.0866	- 10	+ 7	6	+ 0	- 69	120	180	4.7244	7.0866	+ 0	- 10
180	250	7.0866	9.8425	- 12	+ 9	8	+ 0	- 79	180	250	7.0866	9.8425	+ 0	- 12
250	315	9.8425	12.4015	- 14	+ 10	10	+ 0	- 89	250	315	9.8425	12.4015	+ 0	- 14
315	400	12.4015	15.7480	- 16	+ 11	12	+ 0	- 118	315	400	12.4015	15.7480	+ 0	- 16
400	500	15.7480	19.6850	- 18	+ 13	12	—	—	400	500	15.7480	19.6850	+ 0	- 18
500	630	19.6850	24.8031	- 20	+ 14	14	—	—	500	630	19.6850	24.8031	+ 0	- 20
630	800	24.8031	31.4961	- 30	+ 15	16	—	—	630	800	24.8031	31.4961	+ 0	- 30
800	1000	31.4961	39.3701	- 40	+ 17	18	—	—	800	1000	31.4961	39.3701	+ 0	- 40
1000	1250	39.3701	49.2126	- 49	+ 19	20	—	—	1000	1250	39.3701	49.2126	+ 0	- 49
									1250	1600	49.2126	62.9921	+ 0	- 59

Tolerance Limits for:
Metric series tapered roller bearings.

Table 6 (Tolerance Limits in 0.001 mm)

INNER RING

Bore Diameter *d* nominal		Bore Diameter												Width *B* Deviations (Inner Ring)				Bearing Width *T* Deviations (Overall)				Radial Run-Out *Ri* Maximum			
		dm Deviations						*d* Deviations																	
mm		Class O KB		Class 6,5		Class 4		Class O KB		Class 6,5		Class 4		Class 0,6,5		Class 4		Class O		Class 6,5,4		Class			
Over	*Incl.*	*High*	*Low*	*High*	*Low*	*High*	*Low*	*Max.*	*Min.*	*Max.*	*Min.*	*Max.*	*Min.*	*High*	*Low*	*High*	*Low*	*High*	*Low*	*High*	*Low*	*0*	*6*	*5*	*4*
10	18	0	- 8	0	- 7	0	- 5	+ 3	- 11	+ 1	- 8	0	- 5	0	- 200	0	- 200	+ 200	- 200	+ 200	0	15	7	3.5	2.5
18	30	0	- 10	0	- 8	0	- 6	+ 3	- 13	+ 1	- 9	0	- 6	0	- 200	0	- 200	+ 200	- 200	+ 200	0	18	8	4	3
30	50	0	- 12	0	- 10	0	- 8	+ 3	- 15	+ 1	- 11	0	- 8	0	- 240	0	- 240	+ 200	- 200	+ 200	0	20	10	5	4
50	80	0	- 15	0	- 12	0	- 9	+ 4	- 19	+ 2	- 14	0	- 9	0	- 300	0	- 300	+ 200	- 200	+ 200	0	25	10	5	4
80	120	0	- 20	0	- 15	0	- 10	+ 5	- 25	+ 3	- 18	0	- 10	0	- 400	0	- 400	+ 300	- 300	+ 200	- 200	30	13	6	5
120	180	0	- 25	0	- 18	0	- 13	+ 6	- 31	+ 3	- 21	0	- 13	0	- 500	0	- 500	+ 400	- 400	+ 350	- 250	35	18	8	6
180	250	0	- 30	0	- 22	0	- 15	+ 8	- 38	+ 4	- 26	0	- 15	0	- 600	0	- 600	+ 500	- 500	+ 350	- 250	50	20	10	8
250	315	0	- 35	—	—	—	—	+ 9	- 44	—	—	—	—	0	- 700	—	—	+ 600	- 600	—	—	60	—	—	—
315	400	0	- 40	—	—	—	—	+ 10	- 50	—	—	—	—	0	- 800	—	—	+ 700	- 700	—	—	70	—	—	—

Table 6-A (Tolerance Limits in 0.0001 inch)

INNER RING

Bore Diameter d nominal		Bore Diameter												Width B Deviations (Inner Ring)				Bearing Width T Deviations (Overall)				Radial Run-Out Ri Maximum			
		dm Deviations						d Deviations																	
inch		Class O KB		Class 6,5		Class 4		Class O KB		Class 6,5		Class 4		Class 0,6,5		Class 4		Class O		Class 6,5,4		Class			
Over	*Incl.*	*High*	*Low*	*High*	*Low*	*High*	*Low*	*Max.*	*Min.*	*Max.*	*Min.*	*Max.*	*Min.*	High	Low	High	Low	*High*	*Low*	*High*	*Low*	*0*	*6*	*5*	*4*
.3937	.7087	0	- 3.1	0	- 2.8	0	- 2.0	+ 1.2	- 4.3	+ .4	- 3.1	0	- 2.0	0	- 78.7	0	- 78.7	+ 78.7	- 78.7	+ 78.7	0	5.9	2.8	1.4	1.0
.7087	1.1811	0	- 3.9	0	- 3.1	0	- 2.4	+ 1.2	- 5.1	+ .4	- 3.5	0	- 2.4	0	- 78.7	0	- 78.7	+ 78.7	- 78.7	+ 78.7	0	7.1	3.1	1.6	1.2
1.1811	1.9685	0	- 4.7	0	- 3.9	0	- 3.1	+ 1.2	- 5.9	+ .4	- 4.3	0	- 3.1	0	- 94.5	0	- 94.5	+ 78.7	- 78.7	+ 78.7	0	7.9	3.9	2.0	1.6
1.9685	3.1496	0	- 5.9	0	- 4.7	0	- 3.5	+ 1.6	- 7.5	+ .8	- 5.5	0	- 3.5	0	- 118.1	0	- 118.1	+ 78.7	- 78.7	+ 78.7	0	9.8	3.9	2.0	1.6
3.1496	4.7244	0	- 7.9	0	- 5.9	0	- 3.9	+ 2.0	- 9.8	+ 1.2	- 7.1	0	- 3.9	0	- 157.5	0	- 157.5	+ 118.1	- 118.1	+ 78.7	- 78.7	11.8	5.1	2.4	2.0
4.7244	7.0866	0	- 9.8	0	- 7.1	0	- 5.1	+ 2.4	- 12.2	+ 1.2	- 8.3	0	- 5.1	0	- 196.9	0	- 196.9	+ 157.5	- 157.5	+ 137.8	- 98.4	13.8	7.1	3.1	2.4
7.0866	9.8425	0	- 11.8	0	- 8.7	0	- 5.9	+ 3.1	- 15.0	+ 1.6	- 10.2	0	- 5.9	0	- 236.2	0	- 236.2	+ 196.5	- 196.5	+ 137.8	- 98.4	19.7	7.9	3.9	3.1
9.8425	12.4016	0	- 13.8	—	—	—	—	+ 3.5	- 17.3	—	—	—	—	0	- 275.6	—	—	+ 236.2	- 236.2	—	—	23.6	—	—	—
12.4016	15.7480	0	- 15.7	—	—	—	—	+ 3.9	- 19.7	—	—	—	—	0	- 315.0	—	—	+ 275.6	- 275.6	—	—	27.6	—	—	—

dm is defined as the arithmetical mean of the largest and the smallest single diameter of the bore obtained by two-point measurements.

The values of deviation of *d* are valid for two-point measurements only.

Deviations of *d* for Class 0 apply only to diameter series 0, 2 and 3, and do not apply to either of the following cases: over 40 mm of *d* in diameter series 0, or over 180 mm of *d* in diameter series 2.

Deviations of *d* for Class 6 apply only to diameter series 0, 2 and 3, and do not apply to the case of over 60 mm of *d* in diameter series 0.

Deviations of *d* for Class 5 apply only to diameter series 0, 2 and 3.

KB is the symbol for limit deviations of *dm* and *d* for Class 0.

REMARKS:
The high deviations of bore diameter specified in this table do not apply within a distance of twice the nominal ring chamfer dimension from the ring face.

Table 7 (Tolerance Limits in 0.001 mm)

OUTER RING

Outside Diameter *D* Nominal mm		BEARING OUTSIDE DIAMETER												Radial Run-Out Re Max.			
		Dm Deviations						*D* Deviations									
		Class O hB		Class 6,5		Class 4		Class O hB		Class 6,5		Class 4		Class	Class	Class	Class
Over	*Incl.*	*High*	*Low*	*High*	*Low*	*High*	*Low*	*Max.*	*Min.*	*Max.*	*Min.*	*Max.*	*Min*	*0*	*6*	*5*	*4*
18	30	+ 0	- 9	+ 0	- 8	+ 0	- 6	+ 2	- 11	+ 1	- 9	+ 0	- 6	18	9	6	4
30	50	+ 0	- 11	+ 0	- 9	+ 0	- 7	+ 3	- 14	+ 2	- 11	+ 0	- 7	20	10	7	5
50	80	+ 0	- 13	+ 0	- 11	+ 0	- 9	+ 4	- 17	+ 2	- 13	+ 0	- 9	25	13	8	5
80	120	+ 0	- 15	+ 0	- 13	+ 0	- 10	+ 5	- 20	+ 2	- 15	+ 0	- 10	35	18	10	6
120	150	+ 0	- 18	+ 0	- 15	+ 0	- 11	+ 6	- 24	+ 3	- 18	+ 0	- 11	40	20	11	7
150	180	+ 0	- 25	+ 0	- 18	+ 0	- 13	+ 7	- 32	+ 3	- 21	+ 0	- 13	45	23	13	8
180	250	+ 0	- 30	+ 0	- 20	+ 0	- 15	+ 8	- 38	+ 4	- 24	+ 0	- 15	50	25	15	10
250	315	+ 0	- 35	+ 0	- 25	+ 0	- 18	+ 9	- 44	+ 4	- 29	+ 0	- 18	60	30	18	11
315	400	+ 0	- 40	+ 0	- 28	+ 0	- 20	+ 10	- 50	+ 5	- 33	+ 0	- 20	70	35	20	13
400	500	+ 0	- 45	—	—	—	—	+ 12	- 57	—	—	—	—	80	—	—	—
500	630	+ 0	- 50	—	—	—	—	+ 14	- 64	—	—	—	—	100	—	—	—

Table 7-A (Tolerance Limits in 0.0001 inch)

OUTER RING

Outside Diameter *D* Nominal inch		BEARING OUTSIDE DIAMETER												Radial Run-Out Re Max.			
		Dm Deviations						*D* Deviations									
		Class O hB		Class 6,5		Class 4		Class O hB		Class 6,5		Class 4		Class	Class	Class	Class
Over	*Incl.*	*High*	*Low*	*High*	*Low*	*High*	*Low*	*Max.*	*Min.*	*Max.*	*Min.*	*Max.*	*Min*	*0*	*6*	*5*	*4*
.7087	1.1811	+ 0	- 3.5	+ 0	- 3.1	+ 0	- 2.4	+ .8	- 4.3	+ .4	- 3.5	+ 0	- 2.4	7.1	3.5	2.4	1.6
1.1811	1.9685	+ 0	- 4.3	+ 0	- 3.5	+ 0	- 2.8	+ 1.2	- 5.5	+ .8	- 4.3	+ 0	- 2.8	7.9	3.9	2.8	2.0
1.9685	3.1496	+ 0	- 5.1	+ 0	- 4.3	+ 0	- 3.5	+ 1.6	- 6.7	+ .8	- 5.1	+ 0	- 3.5	9.8	5.1	3.1	2.0
3.1496	4.7244	+ 0	- 5.9	+ 0	- 5.1	+ 0	- 3.9	+ 2.0	- 7.9	+ .8	- 5.9	+ 0	- 3.9	13.8	7.1	3.9	2.4
4.7244	5.9055	+ 0	- 7.1	+ 0	- 5.9	+ 0	- 4.3	+ 2.4	- 9.4	+ 1.2	- 7.1	+ 0	- 4.3	15.7	7.9	4.3	2.8
5.9055	7.0866	+ 0	- 9.8	+ 0	- 7.1	+ 0	- 5.1	+ 2.8	- 12.6	+ 1.2	- 8.3	+ 0	- 5.1	17.7	9.1	5.1	3.1
7.0866	9.8425	+ 0	- 11.8	+ 0	- 7.9	+ 0	- 5.9	+ 3.1	- 15.0	+ 1.6	- 9.4	+ 0	- 5.9	19.7	9.8	5.9	3.9
9.8425	12.4016	+ 0	- 13.8	+ 0	- 9.8	+ 0	- 7.1	+ 3.5	- 17.3	+ 1.6	- 11.4	+ 0	- 7.1	23.6	11.8	7.1	4.3
12.4016	15.7480	+ 0	- 15.7	+ 0	- 11.0	+ 0	- 7.9	+ 3.9	- 19.7	+ 2.0	- 13.0	+ 0	- 7.9	27.6	13.8	7.9	5.1
15.7480	19.6850	+ 0	- 17.7	—	—	—	—	+ 4.7	- 22.4	—	—	—	—	31.5	—	—	—
19.6850	24.8031	+ 0	- 19.7	—	—	—	—	+ 5.5	- 25.2	—	—	—	—	39.4	—	—	—

Dm is defined as the arithmetical mean of the largest and the smallest single diameter of the outside surface obtained by two-point measurements.

hB is the symbol for limit deviations of *DM* and *D* for Class 0.

The values of deviation of *D* are valid for two-point measurements only.

Deviations of *D* for Class 0 apply only to diameter series 0, 2 and 3, and do not apply to either of the following cases: over 80 mm of *D* in diameter series 0, or over 315 mm of *D* in diameter series 2.

Deviations of *D* for Class 6 apply only to diameter series 0, 2 and 3, and do not apply to the case of over 95 mm of *D* in diameter series 0.

REMARKS:

The low deviations of outside diameter specified in this table do not apply within a distance of twice the nominal ring chamfer dimensions from the ring face.

Tolerance limits for:

Tapered roller bearings with “J” prefixed part numbers.

Table 8

CONE BORE TOLERANCES

Cone Bore				Class K				Class N				Class C				Class B			
inch		mm		.0001 inch		.001 mm		.0001 inch		.001 mm		.0001 inch		.001 mm		.0001 inch		.001 mm	
Over	*Incl.*	*Over*	*Incl.*	*High*	*Low*	*High*	*Low*	*High*	*Low*	*High*	*Low*	*High*	*Low*	*High*	*Low*	*High*	*Low*	*High*	*Low*
.3937	.7087	10	18	+0	- 5	+0	-13	+0	- 5	+0	-13	+0	- 4	+0	-10	+0	- 3	+0	- 8
.7087	1.1811	18	30	+0	- 5	+0	-13	+0	- 5	+0	-13	+0	- 4	+0	-10	+0	- 3	+0	- 8
1.1811	1.9685	30	50	+0	- 5	+0	-13	+0	- 5	+0	-13	+0	- 4	+0	-10	+0	- 4	+0	-10
1.9685	3.1496	50	80	+0	- 6	+0	-15	+0	- 6	+0	-15	+0	- 5	+0	-13	+0	- 4	+0	-10
3.1496	4.7244	80	120	+0	- 8	+0	-20	+0	- 8	+0	-20	+0	- 5	+0	-13	+0	- 4	+0	-10
4.7244	7.0866	120	180	+0	-10	+0	-25	+0	-10	+0	-25	+0	- 5	+0	-13	+0	- 4	+0	-10
7.0866	9.8425	180	250	+0	-12	+0	-30	+0	-12	+0	-30	+0	- 6	+0	-15	+0	- 5	+0	-13
9.8425	12.4016	250	315	+0	-14	+0	-35	+0	-14	+0	-35	+0	- 7	+0	-18	+0	- 5	+0	-13

Table 9

CUP O.D. TOLERANCES

Cup O.D.				Class K				Class N				Class C				Class B			
inch		mm		.0001 inch		.001 mm		.0001 inch		.001 mm		.0001 inch		.001 mm		.0001 inch		.001 mm	
Over	*Incl.*	*Over*	*Incl.*	*High*	*Low*	*High*	*Low*	*High*	*Low*	*High*	*Low*	*High*	*Low*	*High*	*Low*	*High*	*Low*	*High*	*Low*
.7087	1.1811	18	30	+0	-8	+0	-20	+0	-8	+0	-20	+0	-3	+0	-8	+0	-3	+0	-8
1.1811	1.9685	30	50	+0	-8	+0	-20	+0	-8	+0	-20	+0	-4	+0	-10	+0	-2	+0	-8
1.9685	3.1496	50	80	+0	-8	+0	-20	+0	-8	+0	-20	+0	-4	+0	-10	+0	-3.5	+0	-9
3.1496	4.7244	80	120	+0	-8	+0	-20	+0	-8	+0	-20	+0	-5	+0	-13	+0	-4	+0	-10
4.7244	5.9055	120	150	+0	-10	+0	-25	+0	-10	+0	-25	+0	-5	+0	-13	+0	-4	+0	-10
5.9055	7.0866	150	180	+0	-10	+0	-25	+0	-10	+0	-25	+0	-5	+0	-13	+0	-4	+0	-10
7.0866	9.8425	180	250	+0	-12	+0	-30	+0	-12	+0	-30	+0	-6	+0	-15	+0	-5	+0	-13
9.8425	12.4016	250	315	+0	-16	+0	-40	+0	-16	+0	-40	+0	-8	+0	-20	+0	-6	+0	-15
12.4016	15.7480	315	400	+0	-16	+0	-40	+0	-16	+0	-40	+0	-8	+0	-20	–	–	–	–
15.7480	19.6850	400	500	+0	-20	+0	-50	+0	-20	+0	-50	+0	-10	+0	-25	–	–	–	–

Table 10

OVERALL BEARING WIDTH TOLERANCES

Cone Bore				Class K				Class N				Class C				Class B			
inch		mm		.0001 inch		.001 mm		.0001 inch		.001 mm		.0001 inch		.001 mm		.0001 inch		.001 mm	
Over	*Incl.*	*Over*	*Incl.*	*High*	*Low*	*High*	*Low*	*High*	*Low*	*High*	*Low*	*High*	*Low*	*High*	*Low*	*High*	*Low*	*High*	*Low*
.3937	.7087	10	18	+79	-0	+200	-0	+39	-0	+100	-0	+79	-79	+200	-200	+79	-79	+200	-200
.7087	1.1811	18	30	+79	-0	+200	-0	+39	-0	+100	-0	+79	-79	+200	-200	+79	-79	+200	-200
1.1811	1.9685	30	50	+79	-0	+200	-0	+39	-0	+100	-0	+79	-79	+200	-200	+79	-79	+200	-200
1.9685	3.1496	50	80	+79	-0	+200	-0	+39	-0	+100	-0	+79	-79	+200	-200	+79	-79	+200	-200
3.1496	4.7244	80	120	+79	-79	+200	-200	+39	-0	+100	-0	+79	-79	+200	-200	+79	-79	+200	-200
4.7244	7.0866	120	180	+79	-79	+200	-200	+59	-0	+150	-0	+79	-98	+200	-250	+79	-98	+200	-250
7.0866	9.8425	180	250	+79	-79	+200	-200	+59	-0	+150	-0	+79	-118	+200	-300	+79	-118	+200	-300
9.8425	12.4016	250	315	+79	-79	+200	-200	+79	-0	+200	-0	+79	-118	+200	-300	+79	-118	+200	-300

Table 11

CONE WIDTH TOLERANCES

Cone Bore				Class K				Class N				Class C				Class B			
inch		mm		.0001 inch		.001 mm		.0001 inch		.001 mm		.0001 inch		.001 mm		.0001 inch		.001 mm	
Over	*Incl.*	*Over*	*Incl.*	*High*	*Low*	*High*	*Low*	*High*	*Low*	*High*	*Low*	*High*	*Low*	*High*	*Low*	*High*	*Low*	*High*	*Low*
.3937	.7087	10	18	+0	-39	+0	-100	+0	-20	+0	-50	+0	-79	+0	-200	+0	-79	+0	-200
.7087	1.1811	18	30	+0	-39	+0	-100	+0	-20	+0	-50	+0	-79	+0	-200	+0	-79	+0	-200
1.1811	1.9685	30	50	+0	-39	+0	-100	+0	-20	+0	-50	+0	-79	+0	-200	+0	-79	+0	-200
1.9685	3.1496	50	80	+0	-59	+0	-150	+0	-20	+0	-50	+0	-118	+0	-300	+0	-118	+0	-300
3.1496	4.7244	80	120	+0	-59	+0	-150	+0	-20	+0	-50	+0	-118	+0	-300	+0	-118	+0	-300
4.7244	7.0866	120	180	+0	-79	+0	-200	+0	-20	+0	-50	+0	-118	+0	-300	+0	-118	+0	-300
7.0866	9.8425	180	250	+0	-79	+0	-200	+0	-20	+0	-50	+0	-138	+0	-350	+0	-138	+0	-350
9.8425	12.4016	250	315	+0	-79	+0	-200	+0	-20	+0	-50	+0	-138	+0	-350	+0	-138	+0	-350

Table 12

CUP WIDTH TOLERANCES

Cup O.D.				Class K				Class N				Class C				Class B			
inch		mm		.0001 inch		.001 mm		.0001 inch		.001 mm		.0001 inch		.001 mm		.0001 inch		.001 mm	
Over	*Incl.*	*Over*	*Incl.*	*High*	*Low*	*High*	*Low*	*High*	*Low*	*High*	*Low*	*High*	*Low*	*High*	*Low*	*High*	*Low*	*High*	*Low*
.7087	1.1811	18	30	+0	-59	+0	-150	+0	-39	+0	-100	+0	-59	+0	-150	+0	-59	+0	-150
1.1811	1.9685	30	50	+0	-59	+0	-150	+0	-39	+0	-100	+0	-59	+0	-150	+0	-59	+0	-150
1.9685	3.1496	50	80	+0	-59	+0	-150	+0	-39	+0	-100	+0	-59	+0	-150	+0	-59	+0	-150
3.1496	4.7244	80	120	+0	-79	+0	-200	+0	-39	+0	-100	+0	-79	+0	-200	+0	-79	+0	-200
4.7244	5.9055	120	150	+0	-79	+0	-200	+0	-39	+0	-100	+0	-79	+0	-200	+0	-79	+0	-200
5.9055	7.0866	150	180	+0	-79	+0	-200	+0	-39	+0	-100	+0	-98	+0	-250	+0	-98	+0	-250
7.0866	9.8425	180	250	+0	-98	+0	-250	+0	-39	+0	-100	+0	-98	+0	-250	+0	-98	+0	-250
9.8425	12.4016	250	315	+0	-98	+0	-250	+0	-39	+0	-100	+0	-118	+0	-300	+0	-118	+0	-300
12.4016	15.7480	315	400	+0	-98	+0	-250	+0	-39	+0	-100	+0	-118	+0	-300	–	–	–	–
15.7480	19.6850	400	500	+0	-118	+0	-300	+0	-39	+0	-100	+0	-138	+0	-350	–	–	–	–

Table 13

ASSEMBLED BEARING MAXIMUM RADIAL RUNOUT

Cup O.D.				Class K		Class N		Class C		Class B	
Inch		mm		.0001 inch	.001 mm	.0001 inch	.001 mm	.0001 inch	.001 mm	.0001 inch	.001 mm
Over	*Incl.*	*Over*	*Incl.*								
.7087	1.1811	18	30	12	30	12	30	2	5	1	2.5
1.1811	1.9685	30	50	12	30	12	30	2.4	6	1	2.5
1.9685	3.1496	50	80	12	30	12	30	2.4	6	1.4	3.5
3.1496	4.7244	80	120	16	40	16	40	2.4	6	1.4	3.5
4.7244	5.9055	120	150	16	40	16	40	2.8	7	1.4	3.5
5.9055	7.0866	150	180	16	40	16	40	3	8	1.5	4
7.0866	9.8425	180	250	20	50	20	50	4	10	2	5
9.8425	12.4016	250	315	20	50	20	50	4.3	11	2	5
12.4016	15.7480	315	400	20	50	20	50	5	13	–	–
15.7480	19.6850	400	500	25	65	25	65	7	18	–	–

Tolerance limits for:
Inch series tapered roller bearings.

Table 14

CONE BORE TOLERANCES

Cone Bore				Class 4				Class 3				Class 0				Class 00			
inch		mm		.0001 inch		.001 mm		.0001 inch		.001 mm		.0001 inch		.001 mm		.0001 inch		.001 mm	
Over	*Incl.*	*Over*	*Incl.*	*High*	*Low*	*High*	*Low*	*High*	*Low*	*High*	*Low*	*High*	*Low*	*High*	*Low*	*High*	*Low*	*High*	*Low*
—	3	—	76.2	+5	-0	+13	-0	+5	-0	+13	-0	5	-0	+13	-0	+3	-0	+8	0
3	12	76.2	304.8	+10	-0	+25	-0	+5	-0	+13	-0	5	-0	+13	-0	+3	-0	+8	0
12	24	304.8	609.6	+20	-0	+51	-0	+10	-0	+25	-0	–	–	–	–	–	–	–	–
24	36	609.6	914.4	+30	-0	+76	-0	+15	-0	+38	-0	–	–	–	–	–	–	–	–
36	48	914.4	1219.2	+40	-0	+102	-0	+20	-0	+51	-0	–	–	–	–	–	–	–	–
48	—	1219.2	—	+50	-0	+127	-0	+30	-0	+76	-0	–	–	–	–	–	–	–	–

Table 15

CUP O.D. TOLERANCES

Cup O.D.				Class 4				Class 3				Class 0				Class 00			
inch		mm		.0001 inch		.001 mm		.0001 inch		.001 mm		.0001 inch		.001 mm		.0001 inch		.001 mm	
Over	*Incl.*	*Over*	*Incl.*	*High*	*Low*	*High*	*Low*	*High*	*Low*	*High*	*Low*	*High*	*Low*	*High*	*Low*	*High*	*Low*	*High*	*Low*
—	12	—	304.8	+10	-0	+25	-0	+5	-0	+13	-0	+5	-0	+13	-0	+3	-0	+8	-0
12	24	304.8	609.6	+20	-0	+51	-0	+10	-0	+25	-0	–	–	–	–	–	–	–	–
24	36	609.6	914.4	+30	-0	+76	-0	+15	-0	+38	-0	–	–	–	–	–	–	–	–
36	48	914.4	1219.2	+40	-0	+102	-0	+20	-0	+51	-0	–	–	–	–	–	–	–	–
48	—	1219.2	—	+50	-0	+127	-0	+30	-0	+76	-0	–	–	–	–	–	–	–	–

Table 16

OVERALL BEARING WIDTH TOLERANCES

Cone Bore				Cup O.D.				Class 4				Class 3				Class 0, 00			
inch		mm		.0001 inch		.001 mm		.0001 inch		.001 mm		.0001 inch		.001 mm		.0001 inch		.001 mm	
Over	*Incl.*	*Over*	*Incl.*	*High*	*Low*	*High*	*Low*	*High*	*Low*	*High*	*Low*	*High*	*Low*	*High*	*Low*	*High*	*Low*	*High*	*Low*
—	4	—	101.6	–	–	–	–	+80	-0	+203	-0	+80	-80	+203	-203	+80	-80	+203	-203
4	12	101.6	304.8	–	–	–	–	+140	-1	+356	-254	+80	-80	+203	-203	+80	-80	+203	-203
12	24	304.8	609.6	–	-20	–	-508	+150	-150	+381	-381	+80	-80	+203	-203	–	–	–	–
12	24	304.8	609.6	+20	–	+508	–	+150	-150	+381	-381	+150	-150	+381	-381	–	–	–	–
24	—	609.6	—	–	–	–	–	+150	-150	+381	-381	+150	-150	+381	-381	–	–	–	–

Table 17

ASSEMBLED BEARING MAXIMUM RADIAL RUNOUT

Cup O.D.				Class 4		Class 3		Class 0		Class 00	
inch		mm		.0001 inch	.001 mm	.0001 inch	.001 mm	.0001 inch	.001 mm	.0001 inch	.001 mm
Over	*Incl.*	*Over*	*Incl.*								
—	12	—	304.8	20	51	3	8	1.5	4	.75	2
12	24	304.8	609.6	20	51	7	18	–	–	–	–
24	36	609.6	914.4	30	76	20	51	–	–	–	–
36	—	914.4	—	30	76	30	76	–	–	–	–

Standard tolerance values for radial internal clearance of single row deep groove ball bearings with cylindrical bore.

NTN
CLEARANCE TABLES

Table 18 (Clearance Limits in 0.001 mm)

SINGLE ROW DEEP GROOVE BALL BEARINGS (CYLINDRICAL BORE)

Nominal Bore d mm		C2 Less than Normal Clearance		— Normal Clearance		C3 Greater than Normal Clearance		C4 Greater than C3 Clearance	
Over	*Incl.*	*Low*	*High*	*Low*	*High*	*Low*	*High*	*Low*	*High*
—	2.5	—	6	4	11	10	20	—	—
2.5	10.0	—	7	2	13	8	23	—	—
10.0	18.0	—	9	3	18	11	25	18	33
18.0	24.0	—	10	5	20	13	28	20	36
24.0	30.0	—	11	5	20	13	28	23	41
30.0	40.0	—	11	6	20	15	33	28	46
40.0	50.0	—	11	6	23	18	36	30	51
50.0	65.0	—	15	8	28	23	43	38	61
65.0	80.0	—	15	10	30	25	51	46	71
80.0	100.0	—	18	12	36	30	58	53	84
100.0	120.0	—	20	15	41	36	66	61	97
120.0	140.0	—	23	18	48	41	81	71	114
140.0	160.0	—	23	18	53	46	91	81	130
160.0	180.0	—	25	20	61	53	102	91	147
180.0	200.0	—	30	25	71	63	117	107	163

Table 18-A (Clearance Limits in 0.0001 inch)

SINGLE ROW DEEP GROOVE BALL BEARINGS (CYLINDRICAL BORE)

Nominal Bore d inch		C2 Less than Normal Clearance Clearance		— Normal Clearance		C3 Greater than Normal Clearance		C4 Greater than C3 Clearance	
Over	*Incl.*	*Low*	*High*	*Low*	*High*	*Low*	*High*	*Low*	*High*
—	.0984	—	2.4	1.6	4.3	3.9	7.9	—	—
.0984	.3937	—	2.8	.8	5.1	3.1	9.1	—	—
.3937	.7087	—	3.5	1.2	7.1	4.3	9.8	7.1	13.0
.7087	.9449	—	3.9	2.0	7.9	5.1	11.0	7.9	14.2
.9449	1.1811	—	4.3	2.0	7.9	5.1	11.0	9.1	16.1
1.1811	1.5748	—	4.3	2.4	7.9	5.9	13.0	11.0	18.1
1.5748	1.9685	—	4.3	2.4	9.1	7.1	14.2	11.8	20.1
1.9685	2.5591	—	5.9	3.1	11.0	9.1	16.9	15.0	24.0
2.5591	3.1496	—	5.9	3.9	11.8	9.8	20.1	18.1	28.0
3.1496	3.9370	—	7.1	4.7	14.2	11.8	22.8	20.9	33.1
3.9370	4.7244	—	7.9	5.9	16.1	14.2	26.0	24.0	38.2
4.7244	5.5118	—	9.1	7.1	18.9	16.1	31.9	28.0	44.9
5.5118	6.2993	—	9.1	7.1	20.9	18.1	35.8	31.9	51.2
6.2992	7.0866	—	9.8	7.9	24.0	20.9	40.2	35.8	57.9
7.0866	7.8740	—	11.8	9.8	28.0	24.8	46.1	42.1	64.2

RADIAL CLEARANCE COMPENSATION VALUES

Table 19 (Clearance Limits in 0.001 mm)

Nominal Bore d mm		Measuring Load (kg)	Clearance			
Over	*Incl.*		C2	Normal	C3	C4
10	18	2.5	3~4	4	4	4
18	50	5	4~5	5	6	6

Table 19-A (Clearance Limits in 0.0001 inch)

Nominal Bore d inch		Measuring Load (lbs)	Clearance			
Over	*Incl.*		C2	Normal	C3	C4
.3937	.7087	5.5	1.2~1.6	1.6	1.6	1.6
.7087	1.9685	11	1.6~2.0	2.0	2.4	2.4

REMARKS:
When measuring radial internal clearance, a slight amount of elastic deformation of the bearing occurs. The resulting measured clearance is slightly larger than the true clearance, and must be accounted for. These compensation values are given in tables 19 and 19-A.

Standard tolerance values for radial internal clearance of cylindrical roller bearings with cylindrical bore and interchangeable component.

Table 20 (Clearance Limits in 0.001 mm)

CYLINDRICAL ROLLER BEARINGS (cylindrical bore; interchangeable component)											
Nominal Bore *d* mm		C2 Less than Normal Clearance		Normal Clearance		C3 Greater than Normal Clearance		C4 Greater than C3 Clearance		C5 Greater than C4 Clearance	
Over	*Incl.*	*Min*	*Max*	*Min*	*Max*	*Min*	*Max*	*Min*	*Max*	*Min*	*Max*
—	10	0	25	20	45	35	60	50	75	—	—
10	24	0	25	20	45	35	60	50	75	65	90
24	30	0	25	20	45	35	60	50	75	70	95
30	40	5	30	25	50	45	70	60	85	80	105
40	50	5	35	30	60	50	80	70	100	95	125
50	65	10	40	40	70	60	90	80	110	110	140
65	80	10	45	40	75	65	100	90	125	130	165
80	100	15	50	50	85	75	110	105	140	155	190
100	120	15	55	50	90	85	125	125	165	180	220
120	140	15	60	60	105	100	145	145	190	200	245
140	160	20	70	70	120	115	165	165	215	225	275
160	180	25	75	75	125	120	170	170	220	250	300
180	200	35	90	90	145	140	195	195	250	275	330
200	225	45	105	105	165	160	220	220	280	305	365
225	250	45	110	110	175	170	235	235	300	330	395
250	280	55	125	125	195	190	260	260	330	370	440
280	315	55	130	130	205	200	275	275	350	410	485
315	355	65	145	145	225	225	305	305	385	455	535
355	400	100	190	190	280	280	370	370	460	510	600
400	450	110	210	210	310	310	410	410	510	565	665
450	500	110	220	220	330	330	440	440	550	625	735

Table 20-A (Clearance Limits in 0.0001 inch)

CYLINDRICAL ROLLER BEARINGS (cylindrical bore; interchangeable component)											
Nominal Bore *d* inch		C2 Less than Normal Clearance		Normal Clearance		C3 Greater than Normal Clearance		C4 Greater than C3 Clearance		C5 Greater than C4 Clearance	
Over	*Incl.*	*Min*	*Max*	*Min*	*Max*	*Min*	*Max*	*Min*	*Max*	*Min*	*Max*
—	0.3937	0.000	9.843	7.874	17.717	13.780	23.622	19.685	29.528	—	—
0.3937	0.9449	0.000	9.843	7.874	17.717	13.780	23.622	19.685	29.528	25.591	35.433
0.9449	1.1811	0.000	9.843	7.874	17.717	13.780	23.622	19.685	29.528	27.559	37.402
1.1811	1.5748	1.969	11.811	9.843	19.685	17.717	27.559	23.622	33.465	31.496	41.339
1.5748	1.9685	1.969	13.780	11.811	23.622	19.685	31.496	27.559	39.370	37.402	49.213
1.9685	2.5591	3.937	15.748	15.748	27.559	23.622	35.433	31.496	43.307	43.307	55.118
2.5591	3.1496	3.937	17.717	15.748	29.528	25.591	43.307	35.433	49.213	51.181	64.961
3.1496	3.9370	5.906	19.685	19.685	33.465	29.528	43.307	41.339	55.118	61.024	74.803
3.9370	4.7244	5.906	21.654	19.685	35.433	33.465	49.213	49.213	64.961	70.866	86.614
4.7244	5.5118	5.906	23.622	23.622	41.339	39.370	57.087	57.087	74.803	78.740	96.457
5.5118	6.2992	7.874	27.559	27.559	47.244	45.276	64.961	64.961	84.646	88.583	108.268
6.2992	7.0866	9.843	29.528	29.528	49.213	47.244	66.929	66.929	86.614	98.425	118.110
7.0866	7.8740	13.780	35.433	35.433	57.087	55.118	76.772	76.772	98.425	108.268	129.921
7.8740	8.8583	17.717	41.339	41.339	64.961	62.992	86.614	86.614	110.236	120.079	143.701
8.8583	9.8425	17.717	43.307	43.307	68.898	66.929	92.520	92.520	118.110	129.921	155.512
9.8425	11.0236	21.654	49.213	49.213	76.772	74.803	102.362	102.362	129.921	145.669	173.228
11.0236	12.4016	21.654	51.181	51.181	80.709	78.740	108.268	108.268	137.795	161.417	190.945
12.4016	13.9764	25.591	57.087	57.087	88.583	88.583	120.079	120.079	151.575	179.134	210.630
13.9764	15.7480	39.370	74.803	74.803	110.236	110.236	145.669	145.669	181.102	200.787	236.220
15.7480	17.7165	43.307	82.677	82.677	122.047	122.047	161.417	161.417	200.787	222.441	261.811
17.7165	19.6850	43.307	86.614	86.614	129.921	129.921	173.228	173.228	216.535	246.063	289.370

Standard tolerance values for radial internal clearance of cylindrical roller bearings with cylindrical bore and non-interchangeable component*:

*(NA suffix designates non-interchangeable component)

NTN CLEARANCE TABLES

Table 21 (Clearance Limits in 0.001 mm)

CYLINDRICAL ROLLER BEARINGS (cylindrical bore; non-interchangeable component)

Nominal Bore d mm		C1 NA Less than C2 Clearance		C2 NA Less than Normal Clearance		NA Normal Clearance		C3 NA Greater than Normal Clearance		C4 NA Greater than C3 Clearance		C5 NA Greater than C4 Clearance	
Over	Incl.	Low	High	Low	High	Low	High	Low	High	Low	High	Low	High
18	24	5	10	10	20	20	30	35	45	45	55	65	75
24	30	5	10	10	25	25	35	40	50	50	60	70	80
30	40	5	12	12	25	25	40	45	55	55	70	80	95
40	50	5	15	15	30	30	45	50	65	65	80	95	110
50	65	5	15	15	35	35	50	55	75	75	90	110	130
65	80	10	20	20	40	40	60	70	90	90	110	130	150
80	100	10	25	25	45	45	70	80	105	105	125	155	180
100	120	10	25	25	50	50	80	95	120	120	145	180	205
120	140	15	30	30	60	60	90	105	135	135	160	200	230
140	160	15	35	35	65	65	100	115	150	150	180	225	260
160	180	15	35	35	75	75	110	125	165	165	200	250	285
180	200	20	40	40	80	80	120	140	180	180	220	275	315
200	225	20	45	45	90	90	135	155	200	200	240	305	350
225	250	25	50	50	100	100	150	170	215	215	265	330	380
250	280	25	55	55	110	110	165	185	240	240	295	370	420
280	315	30	60	60	120	120	180	205	265	265	325	410	470
315	355	30	65	65	135	135	200	225	295	295	360	455	520
355	400	35	75	75	150	150	225	255	330	330	405	510	585
400	450	45	85	85	170	170	255	285	370	370	455	565	650
450	500	50	95	95	190	190	285	315	410	410	505	625	720

Table 21-A (Clearance Limits in 0.0001 inch)

CYLINDRICAL ROLLER BEARINGS (cylindrical bore; non-interchangeable component)

Nominal Bore d inch		C1 NA Less than C2 Clearance		C2 NA Less than Normal Clearance		NA Normal Clearance		C3 NA Greater than Normal Clearance		C4 NA Greater than C3 Clearance		C5 NA Greater than C4 Clearance	
Over	Incl.	Low	High	Low	High	Low	High	Low	High	Low	High	Low	High
.7087	.9449	2.0	3.9	3.9	7.9	7.9	11.8	13.6	17.7	17.7	21.7	25.6	29.5
.9449	1.1811	2.0	3.9	3.9	9.8	9.8	13.8	15.7	19.7	19.7	23.6	27.6	31.5
1.1811	1.5748	2.0	4.7	4.7	9.8	9.8	15.7	17.7	21.7	21.7	27.6	31.5	37.4
1.5748	1.9685	2.0	5.9	5.9	11.8	11.8	17.7	19.7	25.6	25.6	31.5	37.4	43.3
1.9685	2.5591	2.0	5.9	5.9	13.8	13.8	19.7	21.7	29.5	29.5	35.4	43.3	51.2
2.5591	3.1496	3.9	7.9	7.9	15.7	15.7	23.6	27.6	35.4	35.4	43.3	51.2	59.1
3.1496	3.9370	3.9	9.8	9.8	17.7	17.7	27.6	31.5	41.3	41.3	49.2	61.0	70.9
3.9370	4.7244	3.9	9.8	9.8	19.7	19.7	31.5	37.4	47.2	47.2	57.1	70.9	80.7
4.7244	5.5118	5.9	11.8	11.8	23.6	23.6	35.4	41.3	53.1	53.1	63.0	78.7	90.6
5.5118	6.2992	5.9	13.8	13.8	25.6	25.6	39.4	45.3	59.1	59.1	70.9	88.6	102.4
6.2992	7.0866	5.9	13.8	13.8	29.5	29.5	43.3	49.2	65.0	65.0	78.7	98.4	112.2
7.0866	7.8740	7.9	15.7	15.7	31.5	31.5	47.2	55.1	70.9	70.9	86.6	108.3	124.0
7.8740	8.8583	7.9	17.7	17.7	35.4	35.4	53.1	61.0	78.7	78.7	94.5	120.1	137.8
8.8583	9.8425	9.8	19.7	19.7	39.4	39.4	59.1	66.9	84.6	84.6	104.3	129.9	149.6
9.8425	11.0236	9.8	21.7	21.7	43.3	43.3	65.0	72.8	94.5	94.5	116.1	145.7	165.4
11.0236	12.4016	11.8	23.6	23.6	47.2	47.2	70.9	80.7	104.3	104.3	128.0	161.4	185.0
12.4016	13.9764	11.8	25.6	25.6	53.1	53.1	78.7	88.6	116.1	116.1	141.7	179.1	204.7
13.9764	15.7480	13.8	29.5	29.5	59.1	59.1	88.6	100.4	129.9	129.9	159.4	200.8	230.3
15.7480	17.7165	17.7	33.5	33.5	66.9	66.9	100.4	112.2	145.7	145.7	179.1	222.4	255.9
17.7165	19.6850	19.7	37.4	37.4	74.8	74.8	112.2	124.0	161.4	161.4	198.8	246.1	283.5

Standard tolerance values for radial internal clearance of spherical roller bearings with cylindrical bore.

Table 22 (Clearance Limits in 0.001 mm)

SPHERICAL ROLLER BEARINGS (cylindrical bore)

Nominal Bore *d* mm		C2 Less than Normal Clearance		— Normal Clearance		C3 Greater than Normal Clearance		C4 Greater than C3 Clearance	
Over	*Incl.*	*Low*	*High*	*Low*	*High*	*Low*	*High*	*Low*	*High*
30	40	15	30	30	45	45	60	60	80
40	50	20	35	35	55	55	75	75	100
50	65	20	40	40	65	65	90	90	120
65	80	30	50	50	80	80	110	110	145
80	100	35	60	60	100	100	135	135	180
100	120	40	75	75	120	120	160	160	210
120	140	50	95	95	145	145	190	190	240
140	160	60	110	110	170	170	220	220	280
160	180	65	120	120	180	180	240	240	310
180	200	70	130	130	200	200	260	260	340
200	225	80	140	140	220	220	290	290	380
225	250	90	150	150	240	240	320	320	420
250	280	100	170	170	260	260	350	350	460
280	315	110	190	190	280	280	370	370	500
315	355	120	200	200	310	310	410	410	550
355	400	130	220	220	340	340	450	450	600
400	450	140	240	240	370	370	500	500	660
450	500	140	260	260	410	410	550	550	720
500	560	150	280	280	440	440	600	600	780
560	630	170	310	310	480	480	650	650	850
630	710	190	350	350	530	530	700	700	920
710	800	210	390	390	580	580	770	770	1010
800	900	230	430	430	650	650	860	860	1120
900	1000	260	480	480	710	710	930	930	1220

Table 22-A (Clearance Limits in 0.0001 inch)

SPHERICAL ROLLER BEARINGS (cylindrical bore)

Nominal Bore *d* inch		C2 Less than Normal Clearance		— Normal Clearance		C3 Greater than Normal Clearance		C4 Greater than C3 Clearance	
Over	*Incl.*	*Low*	*High*	*Low*	*High*	*Low*	*High*	*Low*	*High*
1.1811	1.5748	5.9	11.8	11.8	17.7	17.7	23.6	23.6	31.5
1.5748	1.9685	7.9	13.8	13.8	21.7	21.7	29.5	29.5	39.4
1.9685	2.5591	7.9	15.7	15.7	25.6	25.6	35.4	35.4	47.2
2.5591	3.1496	11.8	19.7	19.7	31.5	31.5	43.3	43.3	57.1
3.1496	3.9370	13.8	23.6	23.6	39.4	39.4	53.1	53.1	70.9
3.9370	4.7244	15.7	29.5	29.5	47.2	47.2	63.0	63.0	82.7
4.7244	5.5118	19.7	37.4	37.4	57.1	57.1	74.8	74.8	94.5
5.5118	6.2992	23.6	43.3	43.3	66.9	66.9	86.6	86.6	110.2
6.2992	7.0866	25.6	47.2	47.2	70.9	70.9	94.5	94.5	122.0
7.0866	7.8740	27.6	51.2	51.2	78.7	78.7	102.4	102.4	133.9
7.8740	8.8583	31.5	55.1	55.1	86.6	86.6	114.2	114.2	149.6
8.8583	9.8425	35.4	59.1	59.1	94.5	94.5	126.0	126.0	165.4
9.8425	11.0236	39.4	66.9	66.9	102.4	102.4	137.8	137.8	181.1
11.0236	12.4016	43.3	74.8	74.8	110.2	110.2	145.7	145.7	196.9
12.4016	13.9764	47.2	78.7	78.7	122.0	122.0	161.4	161.4	216.5
13.9764	15.7480	51.2	86.6	86.6	133.9	133.9	177.2	177.2	236.2
15.7480	17.7165	55.1	94.5	94.5	145.7	145.7	196.9	196.9	259.8
17.7165	19.6850	55.1	102.4	102.4	161.4	161.4	216.5	216.5	283.5
19.6850	22.0472	59.1	110.2	110.2	173.2	173.2	236.2	236.2	307.1
22.0472	24.8031	66.9	122.0	122.0	189.0	189.0	255.9	255.9	334.6
24.8031	27.9528	74.8	137.8	137.8	208.7	208.7	275.6	275.6	362.2
27.9528	31.4961	82.7	153.5	153.5	228.3	228.3	303.1	303.1	397.6
31.4961	35.4331	90.6	169.3	169.3	255.9	255.9	338.6	338.6	440.9
35.4331	39.3701	102.4	189.0	189.0	279.5	279.5	366.1	366.1	480.3

Standard tolerance values for radial internal clearance of spherical roller bearings with tapered bore.

Table 23 (Clearance Limits in 0.001 mm)

SPHERICAL ROLLER BEARINGS (TAPERED BORE)									
Nominal Bore *d* mm		C2 Less than Normal Clearance		— Normal Clearance		C3 Greater than Normal Clearance		C4 Greater than C3 Clearance	
Over	*Incl.*	*Low*	*High*	*Low*	*High*	*Low*	*High*	*Low*	*High*
30	40	25	35	35	50	50	65	65	85
40	50	30	45	45	60	60	80	80	100
50	65	40	55	55	75	75	95	95	120
65	80	50	70	70	95	95	120	120	150
80	100	55	80	80	110	110	140	140	180
100	120	65	100	100	135	135	170	170	220
120	140	80	120	120	160	160	200	200	260
140	160	90	130	130	180	180	230	230	300
160	180	100	140	140	200	200	260	260	340
180	200	110	160	160	220	220	290	290	370
200	225	120	180	180	250	250	320	320	410
225	250	140	200	200	270	270	350	350	450
250	280	150	220	220	300	300	390	390	490
260	315	170	240	240	330	330	430	430	540
315	355	190	270	270	360	360	470	470	590
355	400	210	300	300	400	400	520	520	650
400	450	230	330	330	440	440	570	570	720
450	500	260	370	370	490	490	630	630	790
500	560	290	410	410	540	540	680	680	870
560	630	320	460	460	600	600	760	760	980
630	710	350	510	510	670	670	850	850	1090
710	800	390	570	560	750	750	960	960	1220
800	900	440	640	640	840	840	1070	1070	1370
900	1000	490	710	710	930	930	1190	1190	1520

Table 23-A (Clearance Limits in 0.0001 inch)

SPHERICAL ROLLER BEARINGS (TAPERED BORE)									
Nominal Bore *d* inch		C2 Less than Normal Clearance		— Normal Clearance		C3 Greater than Normal Clearance		C4 Greater than C3 Clearance	
Over	*Incl.*	*Low*	*High*	*Low*	*High*	*Low*	*High*	*Low*	*High*
1.1811	1.5748	9.8	13.8	13.8	19.7	19.7	25.6	25.6	33.5
1.5748	1.9685	11.8	17.7	17.7	23.6	23.6	31.5	31.5	39.4
1.9685	2.5591	15.7	21.7	21.7	29.5	29.5	37.4	37.4	47.2
2.5591	3.1496	19.7	27.6	27.6	37.4	37.4	47.2	47.2	59.1
3.1496	3.9370	21.7	31.5	31.5	43.3	43.3	55.1	55.1	70.9
3.9370	4.7244	25.6	39.4	39.4	53.1	53.1	66.9	66.9	86.6
4.7244	5.5118	31.5	47.2	47.2	63.0	63.0	78.7	78.7	102.4
5.5118	6.2992	35.4	51.2	51.2	70.9	70.9	90.6	90.6	118.1
6.2992	7.0866	39.4	55.1	55.1	78.7	78.7	102.4	102.4	133.9
7.0866	7.8740	43.3	63.0	63.0	86.6	86.6	114.2	114.2	145.7
7.8740	8.8583	47.2	70.9	70.9	98.4	98.4	126.0	126.0	161.4
8.8583	9.8425	55.1	78.7	78.7	106.3	106.3	137.8	137.8	177.2
9.8425	11.0236	59.1	86.6	86.6	118.1	118.1	153.5	153.5	192.9
11.0236	12.4016	66.9	94.5	94.5	129.9	129.9	169.3	169.3	212.6
12.4016	13.9764	74.8	106.3	106.3	141.7	141.7	185.0	185.0	232.3
13.9764	15.7480	82.7	118.1	118.1	157.5	157.5	204.7	204.7	255.9
15.7480	17.7165	90.6	129.9	129.9	173.2	173.2	224.4	224.4	283.5
17.7165	19.6850	102.4	145.7	145.7	192.9	192.9	248.0	248.0	311.0
19.6850	22.0472	114.2	161.4	161.4	212.6	212.6	267.7	267.7	342.5
22.0472	24.8031	126.0	181.1	181.1	236.2	236.2	299.2	299.2	385.8
24.8031	27.9528	137.8	200.8	200.8	263.8	263.8	334.6	334.6	429.1
27.9528	31.4961	153.5	224.4	224.4	295.3	295.3	378.0	378.0	480.3
31.4961	35.4331	173.2	252.0	252.0	330.7	330.7	421.3	421.3	539.4
35.4331	39.3701	192.9	279.5	279.5	366.1	366.1	468.5	468.5	598.4

SEALS, SHIELDS, AND SNAP RINGS

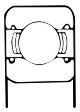 Open type	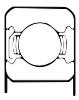 Single shielded	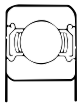 Double shielded	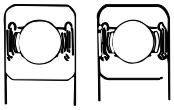 Double sealed	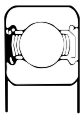 Single shielded sealed	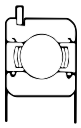 With snap ring
NTN Suffix	Z	ZZ	LLB or LLU	LBZ or LUZ	NR
BARDEN Suffix	S	SS	FF	—	—
BCA Suffix	S	SS	DD	DS	L
FAFNIR Suffix	D	DD	PP	PD	G
FAG Suffix	Z	2Z	2RS	RSZ	NR
MRC Suffix	F	FF	ZZ	ZF	G
NDH Prefix	7	77	99	97	4
NSK Suffix	Z	ZZ	VV OR DDU	VZ OR DUZ	NR
SKF Suffix	Z	2Z	2RS	RSZ	NR

SUFFIXES FOR SUPER PRECISION BEARINGS

MFG	ABEC-3 ISO CLASS 6	ABEC-5 ISO CLASS 5	ABEC-7 ISO CLASS 4	ABEC-9 ISO CLASS 2
NTN	P6	P5	P4	P2
BARDEN	—	ABEC5	ABEC7	ABEC9
FAFNIR	M*	V*	MM*	MMX*
FAG	P6	P5	P4	P2
MRC	—	ABEC-5	ABEC-7	ABEC-9
NDH	3	5	7	9
NSK	P6	P5	P4	P2
SKF	P6	P5	P4	PA9A

* These are prefixes

RADIAL BALL BEARINGS

NTN	BARDEN	BCA	FAFNIR	FAG	MRC	NDH	NSK	SKF
634	34K	34	34K	634	34	34	R4B	
635	35K	35	35K	635	35	35	R5B	
626	36K	36	36K	626	36	36	R6B	
627	37K	37	37K	627	37	37	R7	
608	38K	38	38K	608	38	38	R8	
629	39K	39	39K	629	39	39	R9	
6000	100K	100	9100K	6000	100KS	3L00	6000	
6200	200	200	200K	6200	200S	3200	6200	
6300	—	300	300K	6300	300S	3300	6300	
BL200	—	1200	200W	200	200M	1200	200	
BL300	—	1300	300W	300	300M	1300	300	
8000	—	8000	30KL	8000	30FS	8000	—	—
87000	—	87000	30KLD	87000	30FSF	87000	—	—
88000	—	88000	30KLL	88000	30FFS	88000	—	—
8500	—	8500	200KL	8500	200FS	8500	—	—
87500	—	87500	200KLD	87500	200FSF	87500	—	—
88500	—	88500	200KLL	88500	200FFS	88500	—	—
63200	9200	—	W200PP	S3500	200SFFC	—	—	462200
63300	9300	—	W300PP	S3600	300SFFC	—	—	462300
6900	—	—	9300K	61900	1900S	3LL00	6900	61900
R2	—	—	33K3	R2	R-2	R2	R2	—
RA2	SR2A	—	33K4	RA2	R-2A	R2A	R2A	EE-0
R3	SR3K	—	33K5	R3	R-3	R3	R3	EE-1
RA3Z	SR3S	—	33KD5	R3-Z	R-3-FM	7R3	R3Z	—
R188	SR188K	—	—	—	—	—	R188	—
EE2	SR4A	—	S1K	R4A	R-4A-4	R4A	EE2	EE-2
EE3	SR6K	—	S3K	R6	R-6	R6	EE3	EE-3
R4	SR4K	R4SS	S1K7	R4	R-4	R4	R4	—
RA4Z	SR4AS	—	S1KD	R4-A-Z	R-4-AF	7R4A	R4Z	—
R6Z	SR6S	R6SS	S3KD	R6-Z	R-6-F	7R6	R6Z	—
R8Z	SR8S	R8SS	S5KD	R8-Z	R-8-F	7R8	R8Z	—
R10Z	SR10S	R10S	S7KD	R10-Z	R-10-F	7R10	R10Z	—
R12Z	—	R12S	S8KD	R12-Z	R-12-F	7R12	R12Z	—
R14Z	—	R14S	—	R14-Z	R-14-F	7R14	R14Z	—
R16Z	—	R16S	—	R16-Z	R-16-F	7R16	R16Z	—
R18Z	—	—	—	R18-Z	R-18-F	7R18	R18Z	—
R20Z	—	—	—	R20-Z	—	7R20	R20Z	—

ANGULAR AND SELF ALIGNING BALL BEARINGS

NTN	BARDEN	BCA	FAFNIR	FAG	MRC	NDH	NSK	SKF
7000	2100H	—	7100PW	7000	7100KR	0L00	7000	7100
7200	2200H	7200	7200PW	7200	7200	20200	7200	7200
7300	2300H	7300	7300PW	7300	7300	20300	7300	7300
3200	—	5200	5200	3200	5200	5200	—	5200
5200	—	—	—	—	—	—	5200	—
3300	—	5300	5300	3300	5300	5300	—	5300
5300	—	—	—	—	—	—	5300	—
1200	—	—	L200	1200	—	2500	1200	1200
2200	—	—	L6200	2200	—	—	2200	2200
1300	—	—	L300	1300	—	2600	1300	1300
2300	—	—	L6300	2300	—	—	2300	2300

NTN
INTERCHANGE DATA

CYLINDRICAL ROLLER BEARINGS

NTN	BCA or BOWER	FAG	NDH	NSK	ROLLWAY	SKF	TORRINGTON
NU1000	—	NU1000	A1000WB	NU1000	—	NU1000	—
NU200	MA1200EL	NU200	A1200WB	NU200	MUC200	NU200	000RU02
NJ200	MR1200EL	NJ200	R1200WB	NJ200	MUL200	NJ200	000RJ02
NH200	—	—	PR1200WB	NH200	MR200	NH200	—
NUP200	MSN1200EX	NUP200	—	NUP200	MU200	NUP200	000RT02
N200	MU1200CL	N200	BU1200Z	N200	MCS200	N200	000RN02
NF200	MU1200DL	NF200	BU1200L	NF200	ML200	NF200	000RF02
NU2200	—	NU2200	—	NU2200	—	NU2200	—
NU300	MA1300EL	NU300	A1300WB	NU300	MUC300	NU300	000RU03
NU2300	—	NU2300	—	NU2300	—	NU2300	—
NN3000	—	NN3000	—	NN3000	—	NN3000	—

SPHERICAL ROLLER BEARINGS

NTN	FAG	PTC- LINKBELT	NSK	SKF	TORRINGTON
23900	23900	—	23900	23900	23900
23000	23000	23000LB	23000	23000	23000
24000	24000	—	24000	24000	24000
23100	23100	23100LB	23100	23100	23100
24100	24100	—	24100	24100	24100
22200	22200	22200LB	22200	22200	22200
23200	23200	23200LB	23200	23200	23200
21300	21300	—	21300	21300	21300
22300	22300	22300LB	22300	22300	22300
29300	29300	—	29300	29300	29300
29400	29400	—	29400	29400	29400

THRUST BALL BEARINGS

NTN	AETNA	ANDREWS	FAFNIR	FAG	MRC	NSK	SKF
51100	—	51100	—	51100	—	51100	51100
51200	—	51200	—	51200	—	51200	51200
900	1100	900	N1800	—	1100F	—	900
2900	1000	2900	1500	—	2900	—	2900

MOUNTED UNITS AND INSERT BEARINGS

NTN	HUB-CITY	DODGE	FAFNIR	NSK	PTC-LINKBELT	SEALMASTER	SKF
UCP	PB251*	SC	RASC	UCP	P3-U	NP	SY
UCPL	PB250	SCB	—	—	PL3-U	S-500M	—
UELP	PB221	SX	RAS	EWP	P3-Y	—	—
UELPL	PB220	SXB	RAK	—	PL3-Y	—	SYH-X
UCPX	PB350	SCM	RAKH	—	—	MP	—
ASPP	—	SL	—	UBPP	—	SSP	—
ASRPP	—	—	—	UBPPR	—	LRP	—
AELPP	—	SLX	PB	ENPP	—	—	SP
AELRPP	—	—	RPB	—	—	—	SRP
UCF	FB250*	SC	RCJC	UCF	F3-U	SF	FY
UCFL	FB260	SC	RCJTC	UCFL	FX3-U	SFT	—
UELFU	FB220	SX	RCJ	—	F3-Y	—	FY-X
UELFLU	FB230	SX	RCJT		FX3-Y	—	—
UCFX	FB350	SCM	RCJO	—	—	MSF	—
UCFLX	—	SCM	—	—	—	MSFT	—
AELFD	—	—	FLCT	—	—	—	—
ASPF	—	SL	—	UBPF	—	SSF	—
ASPFL	—	SL	—	UBPFL	—	SSFT	—
AELPF	—	SLX	RA	ENPF	—	—	FP
AELPFL	—	SLX	RAT	ENPFL	—	—	FTP
AS	B100	—	—	UB	—	L	—
AEL	B200	—	RA-NPPB	EN	W200U	—	478200
UC	B250	—	GC-KRRB	UC	UG200NL	2-000	479200
UEL	B220	—	G-KRRB	EW	YG200N	—	477200
UCX	B350	—	—	—	—	3-000	—
ASS	—	—	—	—	—	SL	—
AELS	—	—	RA-NPP	—	WB200U	—	—
UCS	—	—	GC-KRRG	UR	UBG200NL	ER	—
UELS	—	—	G-KRR	—	YGB200N	—	—

SAF and SAFS PILLOW BLOCKS

NTN	PTC-LINKBELT	SKF	TORRINGTON
SAF22500	P-LB6800(F)H	SAF22500	SAF22500A
SAF22600	P-LB6900(F)H	SAF22600	SAF22600A
SAF22200	P-LB7800(F)H	SAF22200	SAF22200
SAF22300	P-LB7900(F)H	SAF22300	SAF22300
SAF22500B6	P-LB6800FH	FSAF22500	FSAF22500A
SAFS22500	PK-LB6800FH	SAFS22500	SAFS22500A
SAFS22200	PK-LB78000FH	SAFS22200	SAFS22200

NTN INTERCHANGE DATA

DISC HARROW BEARINGS

NTN	FAFNIR	NDH	BCA
1AS08-7/8	W208PPB13	AS4508FF	DS208TT13
4AS08-7/8	W208PPB11	AS4508FC	DS208TT11
4AS08-7/8	W208PPB18	AS4508H	DS208TT11A
1AS08-1	W208PPB6	AS4508BK	DS208TT6
1AS08-1D1	GW208PPB6	RAS4508AE	DS208TTR6
2AS08-1	W208PPB9	AS4508BE	DS208TT9
4AS08-1	—	AS4508AC	DS208TTB
1AS08-1.1/8	W208PPB5	AS4508BJ	DS208TT5
2AS08-1.1/8	W208PPB8	AS4508EF	DS208TT8
2AS08-1.1/8D1	GW208PPB8	RAS4508EF	DS208TTR8
4AS08-1.1/8	W208PPB12	AS4508BC	DS208TT12B
4AS08-1.1/8	W208PPB19	AS4508F	DS208TT12A
1AS08-1.5/32D1	GW208PPB5	—	DS208TTR5
2AS09-1.1/4	W209PPB5	AS4509A	DS209TT5
4AS09-1.1/4	W209PPB7	AS4509AC	DS209TT7
2AS10-1.1/8	W210PPB6	—	—
3AS10-1.1/8	W210PPB4	—	DS210TT4
3AS11-1.1/2	W211PPB3	AS4511BE	DS211TT3
3AS11-1.1/2D1	GW211PPB3	RAS4511BE	DS211TTR3
4AS11-1.1/2	W211PPB6	AS4511AC	DS11TT6
3AS14-2.1/32D1	GW214PPB4	—	—
5AS08-1.1/8	W208PP5	AS4508BH	DC208TT5
6AS08-1.1/8	W208PP8	AS4508BD	DC208TT8
6AS09-1.1/4	—	AS4509AD	DC209TT5
6AS09-1.1/4D1	—	RAS4509AD	DC209TTR5
7AS10-1.1/8D1	GW210PP4	RAS4510B	DC210TTR4
6AS11-1.1/2V1	W211PP5	AS4511AE	DC211TT5
7AS11-1.1/2	W211PP3	AS4511BD	DC211TT3
7AS11-1.1/2D1	GW211PP3	RAS4511BD	DC211TTR3
1AC08-1.3/16	W208PPB7	—	DS208TT7
2AC08-1.1/2	W208PPB2	—	DS208TT2A
1AC09D1V1	GW209PPB11	—	DS209TTR10
3AC09	W209PPB2	AS4509BE	DS209TT2
3AC09D1	GW209PPB2	RAS4509BE	DS209TTR2
3AC09-1.1/2	W209PPB4	AS4509BD	DS209TT4
3AC09-1.1/2D1	GW209PPB4	RAS4509BD	DS209TTR4
3AC10-1.3/4	W210PPB5	—	DS210TT5
3AC10-1.3/4D1	GW210PPB5	—	DS210TTR5
3AC10-1.15/16	W210PPB2	—	DS210TT2
3AC10-1.15/16D1	GW210PPB2	—	DS210TTR2
1AC11-2.3/16D1V1	GW211PPB9	—	DS211TTR9
3AC11-2.3/16	W211PPB2	—	DS211TT2
3AC11-2.3/16D1	GW211PPB2	—	DS211TTR2
3AC14D1	GW214PPB2	—	—
5AC10-1.15/16V1	RM1115K	3210B	DC210
7AC10-1.15/16	W210PP2	—	DC210TT2
7AC11-2.3/16D1	GW211PP2	RAS4511C	DC211TTR2

HEX BORE BEARINGS

NTN	FAFNIR	NDH	BCA
1AH04-11/16	204KRR2	—	—
1AH05-7/8	205KRR2	—	HPC014GP
2AH05-7/8	205KRRB2	—	HPS014GP
1AH06-1	206KRR6	88506J	HPC100GP
2AH06-1	206KRRB6	88506H	HPS100GP
2AH06-1D1	G206KRRB6	—	—
2AH07-1.1/8	207KRRB9	—	HPS102GP
2AH08-1.1/4V2	W208PPB16	—	—
2AH09-1.1/2	209KRRB2	—	—

ENGLISH/METRIC CONVERSION CHART

WEIGHT

1 ounce	= 28.35 grams (g)	1 gram	= .03527 ounces (oz.)
1 ounce	= .02835 kilograms (kg)	1 gram	= .002205 pounds (lb.)
1 ounce	= .0625 pounds (lb.)	1 kilogram	= 35.274 ounces (oz.)
1 pound	= 16 ounces (oz.)	1 kilogram	= 2.2046 pounds (lb.)
1 pound	= 453.6 grams (g)	1 kg per sq. cm	= 14.223 lb. per sq. inch
1 pound	= .4536 kilograms (kg)	1 kg per sq. meter	= .2048 lb. per sq. foot
1 lb. per sq. inch	= .070307 kg per sq. cm	1 kg per sq. meter	= 1.8433 lb. per sq. yard
1 lb. per sq. foot	= 4.8824 kg per sq. meter	1 g per cu. cm	= .57803 oz. per cu. inch
1 lb. per sq. yard	= .54249 kg per sq. meter	1 kg per cu. meter	= .062428 lb. per cu. foot
1 oz per cu. inch	= 1.7300 g per cu. cm		
1 lb. per cu. foot	= 16.019 kg per cu. meters		

LENGTH

1 inch	= 25.400 millimeters (mm)	1 millimeter	= .03937 inches (in.)
1 inch	= 2.54 centimeters (cm)	1 centimeter	= .3937 inches (in.)
1 inch	= .08333 feet (ft.)	1 centimeter	= .01094 yards (yd.)
1 inch	= .02778 yards (yd.)	1 meter	= 3.2809 feet (ft.)
1 foot	= 12 inches (in.)	1 meter	= 1.0936 yards (yd.)
1 foot	= .333 yards (yd.)	1 kilometer (km)	= 3,281 feet (ft.)
1 foot	= .30481 meters (m)	1 kilometer (km)	= 1,094 yards (yd.)
1 yard	= 36 inches (in.)	1 kilometer (km)	= .6214 statute mile
1 yard	= 3 feet (ft.)		
1 yard	= 91.44 centimeters (cm)		
1 yard	= .9144 meters (m)		
1 statute mile	= 5,280 feet (ft.)		
1 statute mile	= 1,760 yards (yd.)		
1 statute mile	= 1.6093 kilometers (km)		

AREA

1 sq. inch	= 6.4516 sq. centimeters	1 sq. centimeter	= .15500 sq. inches
1 sq. inch	= .00694 sq. feet	1 sq. centimeter	= .00108 sq. feet
1 sq. foot	= 144 sq. inches	1 sq. meter	= 10.764 sq. feet
1 sq. foot	= 929.03 sq. centimeters	1 sq. meter	= 1.196 sq. yards
1 sq. foot	= .1111 sq. yards		
1 sq. foot	= .092903 sq. meters		
1 sq. yard	= 9 sq. feet		
1 sq. yard	= .83612 sq. meters		

VOLUME

1 cu. inch	= .0005787 cu. feet	1 cu. centimeter	= .06102 cu. inches
1 cu. inch	= .017316 quarts (qt.)	1 cu. meter	= 61,023 cu. inches
1 cu. inch	= .004329 gallons (gal.)	1 cu. meter	= 35.31 cu. feet
1 cu. inch	= 16.39 cu. centimeters	1 cu. meter	= 1.30873 cu. yards
1 cu. inch	= .00001639 cu. meters	1 liter	= 61.017 cu. inches
1 cu. inch	= .0164 liters (l)	1 liter	= .03531 cu. feet
1 cu. foot	= 1,728 cu. inches	1 liter	= 2.11327 pints (pt.)
1 cu. foot	= .0370 cu. yards	1 liter	= 1.057 quarts (qt.)
1 cu. foot	= 29.9222 quarts (qt.)	1 liter	= .2642 gallons (gal.)
1 cu. foot	= 7.481 gallons (gal.)		
1 cu. foot	= .0283 cu. meters		
1 cu. foot	= 28.32 liters (l)		
1 cu. yard	= 27 cu. feet		
1 cu. yard	= .76410 cu. meters		
1 pint	= .50 quarts (qt.)		
1 pint	= .4732 liters (l)		
1 quart	= 2 pints (pt.)		
1 quart	= .25 gallons		
1 quart	= 57.75 cu. inches		
1 quart	= .03342 cu. feet		
1 quart	= .9464 liters (l)		
1 gallon	= 231 cu. inches		
1 gallon	= .1337 cu. feet		
1 gallon	= 4 quarts (qt.)		

ENERGY AND POWER

1 foot-pound	= .13826 kilogrammeter	1 kilogrammeter	=7.2330 foot-pounds (ft.-lb.)
1 foot-pound	= .001285 Btu	1 Btu	=778.2 foot pounds (ft.-lb.)
1 ft.-lb. per sec.	= .00182 horsepower (hp.)	1 Btu per min.	=.02358 horsepower (hp.)
1 ft.-lb. per min.	= .0000303 horsepower (hp.)	1 kilowatt	=1.341 horsepower (hp.)
1 horsepower	= 550 ft.-lb. per sec.		
1 horsepower	= 33,000 ft.-lb. per min.		
1 horsepower	= 42.41 Btu per min.		
1 horsepower	= .7457 kilowatts (kw)		

DECIMAL EQUIVALENTS

2,4	8	16	32	64	Decimal	Inches	mm	mm	Inches
				1/64	.015625		.3969	26	1.02362
			1/32		.031250		.7938	27	1.06299
						.039370	1	28	1.10236
				3/64	.046875		1.1906	29	1.14173
		1/16			.062500		1.5875	30	1.18110
				5/64	.078125		1.9844	31	1.22047
						.078740	2	32	1.25984
			3/32		.093750		2.3812	33	1.29921
				7/64	.109375		2.7781	34	1.33858
						.118110	3	35	1.37795
	1/8				.125000		3.1750	36	1.41732
				9/64	.140625		3.5719	37	1.45669
			5/32		.156250		3.9688	38	1.49606
						.157480	4	39	1.53543
				11/64	.171875		4.3656	40	1.57480
		3/16			.187500		4.7625	41	1.61417
						.196850	5	42	1.65354
				13/64	.203125		5.1594	43	1.69291
			7/32		.218750		5.5562	44	1.73228
				15/64	.234375		5.9531	45	1.77165
						.236220	6	46	1.81102
1/4					.250000		6.3500	47	1.85039
				17/64	.265625		6.7469	48	1.88976
						.275591	7	49	1.92913
			9/32		.281250		7.1438	50	1.96850
				19/64	.296875		7.5406	51	2.00787
		5/16			.312500		7.9375	52	2.04724
						.314961	8	53	2.08661
				21/64	.328125		8.3344	54	2.12598
			11/32		.343750		8.7312	55	2.16535
						.354331	9	56	2.20472
				23/64	.359375		9.1281	57	2.24409
	3/8				.375000		9.5250	58	2.28346
				25/64	.390625		9.9219	59	2.32283
						.393701	10	60	2.36220
			13/32		.406250		10.3188	61	2.40157
				27/64	.421875		10.7156	62	2.44094
						.433071	11	63	2.48031
		7/16			.437500		11.1125	64	2.51969
				29/64	.453125		11.5094	65	2.55906
			15/32		.468750		11.9062	66	2.59843
						.472441	12	67	2.63780
				31/64	.484375		12.3031	68	2.67717
1/2					.500000		12.7000	69	2.71654
						.511811	13	70	2.75591
				33/64	.515625		13.0969	71	2.79528
			17/32		.531250		13.4938	72	2.83465
				35/64	.546875		13.8906	73	2.87402
						.551181	14	74	2.91339
		9/16			.562500		14.2875	75	2.95276
				37/64	.578125		14.6844	76	2.99213
						.590551	15	77	3.03150
			19/32		.593750		15.0812	78	3.07087
				39/64	.609375		15.4781	79	3.11024
	5/8				.625000		15.8750	80	3.14961
						.629921	16	81	3.18898
				41/64	.640625		16.2719	82	3.22835
			21/32		.656250		16.6688	83	3.26772
						.669291	17	84	3.30708
				43/64	.671875		17.0656	85	3.34646
		11/16			.687500		17.4625	86	3.38583
				45/64	.703125		17.8594	87	3.42520
						.708661	18	88	3.46457
			23/32		.718750		18.2562	89	3.50394
				47/64	.734375		18.6531	90	3.54331
						.748031	19	91	3.58268
3/4					.750000		19.0500	92	3.62205
				49/64	.765625		19.4469	93	3.66142
			25/32		.781250		19.8438	94	3.70079
						.787402	20	95	3.74016
				51/64	.796875		20.2406	96	3.77953
		13/16			.812500		20.6375	97	3.81890
						.826772	21	98	3.85827
				53/64	.828125		21.0344	99	3.89764
			27/32		.843750		21.4312	100	3.93701
				55/64	.859375		21.8281	110	4.33071
						.866142	22	120	4.72441
	7/8				.875000		22.2250	130	5.11811
				57/64	.890625		22.6219	140	5.51181
						.905512	23	150	5.90551
			29/32		.906250		23.0188	160	6.29921
				59/64	.921875		23.4156	170	6.69291
		15/16			.937500		23.8125	180	7.08661
						.944882	24	190	7.48031
				61/64	.953125		24.2094	200	7.87402
			31/32		.968750		24.6062	210	8.26772
						.984252	25	220	8.66142
				63/64	.984375		25.0031	230	9.05512

CATALOG #A1000 — GENERAL INDEX

NTN Terms and Conditions of Sale 2
Table of Contents....3
NTN Bearing Corporation of America....4–7
Bearing Classifications....8–9
Design and Characteristics....10–11

MICRO BEARING SERIES 12–15
Inch 13
Metric 15

RADIAL BALL BEARING SERIES 16–42
R 17
600 18
69 19
60 20–23
62 24–27
63 28–29
64 30
632, 633 31
BL2....32–33
BL3....34–35
TMB2 36–39
TMB3 40–41

ANGULAR CONTACT BALL BEARING SERIES....43–56
72B....44
73B....45
74B....46
70 47
72 48
73 49
70C 50
72C 51
73C 52
BNT0, HSB0C....53
32, 33 54
52, 53 55
Double Row....56

SELF ALIGNING BALL BEARING SERIES . 57–61
12, 12K....58
22, 22K....59
13, 13K....60
23, 23K....61

CYLINDRICAL ROLLER BEARING SERIES 62–74
N10, NU10 63
NF2, N2, NJ2, NU2, HJ2....64–65
NF3, N3, NJ3, NU3, HJ3....66–67
NF4, N4, NJ4, NU4, HJ4....68–69
NJ22, NU22, HJ22 70–71
NJ23, NU23, HJ23 72–73
NN30, NN30K 74

TAPERED ROLLER BEARING SERIES.... 75–105
4T-335 to 4T-395 76
4T-415 to 4T-535 77
4T-555 to 4T-635 78
4T-655 to 4T-935 79
4T-1300 to 4T-3400 80
4T-3500 to 4T-5300 81
4T-5500 to 4T-07000 82
4T-09000 to 4T-14000 83
4T-14000 to 4T-18500 84
4T-18600 to 4T-25800 85
4T-26800 to 4T-33000 86
4T-33800 to 4T-46700 87
4T-47600 to 4T-67300 88
4T-L68100 to 4T-LM102900 89
4T-LM104900 to 4T-LM506800 90
4T-LM508700 to 4T-M718100 91
4T-M719100 to 4T-HM903200....92
Basic Load Ratings 93
Bearing Weights....94–97
Metric ISO Series 4T-30208 to 4T-30313D 98
Metric ISO Series 30313U to 32026XU 99
Metric ISO Series 32028XU to 32238....100
Metric ISO Series 32240 to 32932XU....101
Metric ISO Series 32934XU to 33217U 102
Bearing Weights (Metric ISO Series) 103
Tapered Roller Bearing Cartridges 104
Tapered Roller Bearing Sets 105

SPHERICAL ROLLER BEARING SERIES 106–119
213 107
222 108
223 109
230 110
231 111
232 112
239 113
240 114
241 115
223 UAVS1 – Shaker Screens 116
MX-W222 – Sealed....117
Bearing Weights....118–119

BEARING ADAPTERS.... 120–123

LOCKNUTS and LOCKWASHERS.... 124–126

BALL and ROLLER THRUST BEARING SERIES 127–133
511 128
512 129
29 130
292, 293 131
294 132

MOUNTED UNITS 134–238
ULTRA CLASS SERIES.... 134–155
UCP 135
UCPL 136
UCPX 137
ARP....138
ARPL....139

UELP....140
UELPL....141
JELP....142
JELPL....143
UCFLU....144
UCFLUX....145
ARFLU....146
UELFLU....147
JELFLU....148
UCFU....149
UCFUX....150
UELFU....151
ARFU....152
JELFU....153
Bearing Weights....154–155

PILLOW BLOCK SERIES.... 156–173
UCP2....156–157
UCPL2....158
UCP3....159
UCPX....160–161
ASPL2....162
ASPP2....163
UELP2....164
UELPL2....165
UELP3....166
JELPL2....167
AELP2....168
AELPL2....169
AELPP2....170
UKP2....171
Bearing Weights....172–173

FLANGED UNIT SERIES 174–203
UCFL2....174
UCFL3....175
UCFLX....176
UELFL2....177
UELFL3....178
UELFLU2....179
AELFL2....180
JELFL2....181
ASFD2....182
AELFD2....183
JELFD2....184
ASPFL2....185
AELPFL2....186
JELPFL2....187
ASPF2....188
AELPF2....189
JELPF2....190
UCF2....191–192
UCF3....193–194
UCFX....195–196
UELF2....197
UELF3....198
UELFU2....199
UKF2....200
Bearing Weights....201–203

BALL BEARING INSERT SERIES 204–221
UC2....204
UC3....205
UCX....206
AS2, ASS2....207
AR2....208
UCS2....209
UCS3....210
UEL2....211
UEL3....212
AEL2, AELS2....213
JEL2....214
REL2....215
UK2....216
Bearing Weights....217–219
Bearing Speed Limits....220–221

DISC HARROW BEARING SERIES ... 222–223
1AS-7AS....222
1AC-7AC....223

HEX BORE BEARINGS SERIES 224
1AH-3AH....224

HEAVY DUTY MOUNTED UNITS..... 225–237
SPW....226–227
SPAW....228–229
SFCW....230–231
SAF....232–235
SAFS....236–237

TECHNICAL INFORMATION 239–252
Bearing Materials....240
Handling & Installation....240–241
Running Test....241
Dismounting....241
Lubrication....242
Analysis of Bearing Operating Problems....243–244
Bearing Nomenclature....245–248
Bearing Ratings and Fitting Practice....249–252

TOLERANCE TABLES 253–264

CLEARANCE TABLES 265–269

INTERCHANGE DATA 270–275
Seals, Shields and Snap Rings....270
Suffixes for Super Precision Bearings....270
Radial Ball Bearings....271
Angular & Self Aligning Ball Bearings....271
Cylindrical Roller Bearings....272
Spherical Roller Bearings....272
Thrust Ball Bearings....272
Mounted Units & Insert Bearings....273
SAF & SAFS Pillow Blocks....273
Disc Harrow Bearings....274
Hex Bore Bearings....275

ENGLISH/METRIC CONVERSION CHART.....276

DECIMAL EQUIVALENTS 277

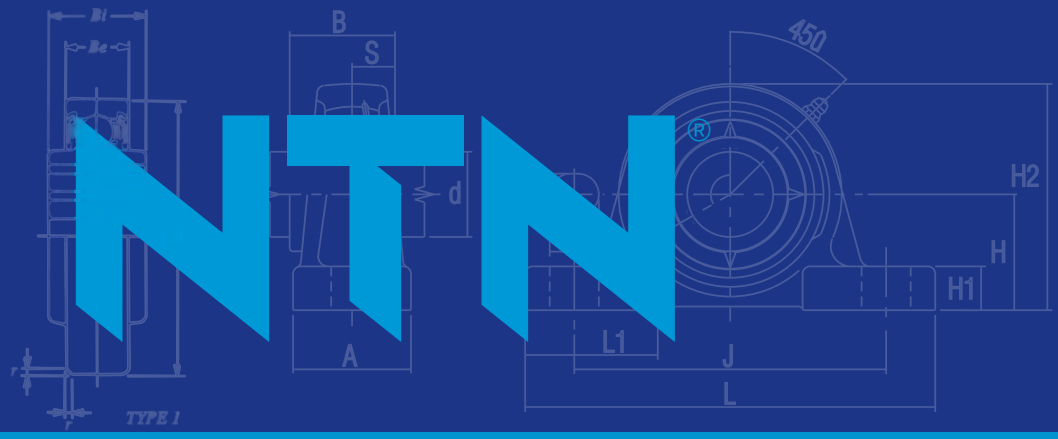

NTN Bearing Corporation of Canada

Corporate Office
305 Courtneypark Drive West
Mississauga, Ontario LSW 1 Y4
Tel: (905) 564-2700
Fax: (905) 564-9023
1-888-412-4122

Montreal Branch
4973 Levy Street
St. Laurent, Quebec H4R 2N9
Tel: (514) 333-8054
Fax: (514) 333-1078
1-888-412-4122

Toronto Branch
2880 Argentia Road, Unit #10
Mississauga, Ontario L5W 1Y4
Tel: (905) 564-9600
Fax: (905) 564-9609
1-888-412-4122

Edmonton Branch
4608 97th Street
Edmonton, Alberta T7E 5N9
Tel: (780) 435-6200
Fax: (780) 435-3600
1-888-412-4122

Vancouver
201-669 Ridley Place
Annacis Island
Delta, B.C. V3M 2Y9
Tel: (604) 517-1777
Fax: (604) 517-1794
1-888-412-4122

NTN Bearing Corporation of America

Corporate Office
1600 East Bishop Court
Mt. Prospect, IL 60056-7604
Tel: (847) 298-7500
Fax: (847) 699-9744
1-800-323-2358

Regional Sales Office
Mt. Prospect, IL
Exton, PA
Norcross, GA
Omaha, NE
Shelbyville, KY
Louisville, OH

© 2009
Equal Opportunity Employer
Printed in USA 12/2009